FLUKE®

Y8846S/Y8846D

Rack Mount Kit

Instruction Sheet

Introduction

This sheet provides instructions for mounting the Fluke 8845A, 8846A, and Hydra series multimeters (hereafter referred to as the Meter) in a standard 19-inch rack panel using the Fluke Y8846S or Y8846D Rack Mount Kit (the Y8846D is not available for the Hydra series).

Preparation

Before installing the rack mount kit, first remove the handle, rubber boots, and three screws from the Meter by performing the following steps:

1. With the Meter flat on the desk, rotate the Meter handle to the vertical position over the top of the Meter as shown in Figure 1.
2. Remove the handle by pulling one side of the handle outward, away from the Meter until free, as shown in Figure 1. Then pull the other side of the handle out, away from the Meter.
3. To remove the boots, pry and pull them from the Meter.
4. Remove the side screw(s) and one rear screw (earth connection) from the Meter.

Table 1 lists the parts included with each Rack Mount Kit:

Table 1. Parts List

Quantity		Description
Y8846S	**Y8846D** [1]	
1	2	Small filler plate
1	NA	Large filler plate
1	NA	Large filler plate bracket
1	1	Rack mount tray
NA	1	Dual center mount
4	2	#8-32 x ½" panhead Phillips screws
1	2	#6-32 x ¼" panhead Phillips screws
4	4	#10-32 x ¾" Phillips rack screws
1	2	#6-32 x ½" panhead Phillips screws
4	4	#10-32 rack nuts

[1] Not available for Hydra series.

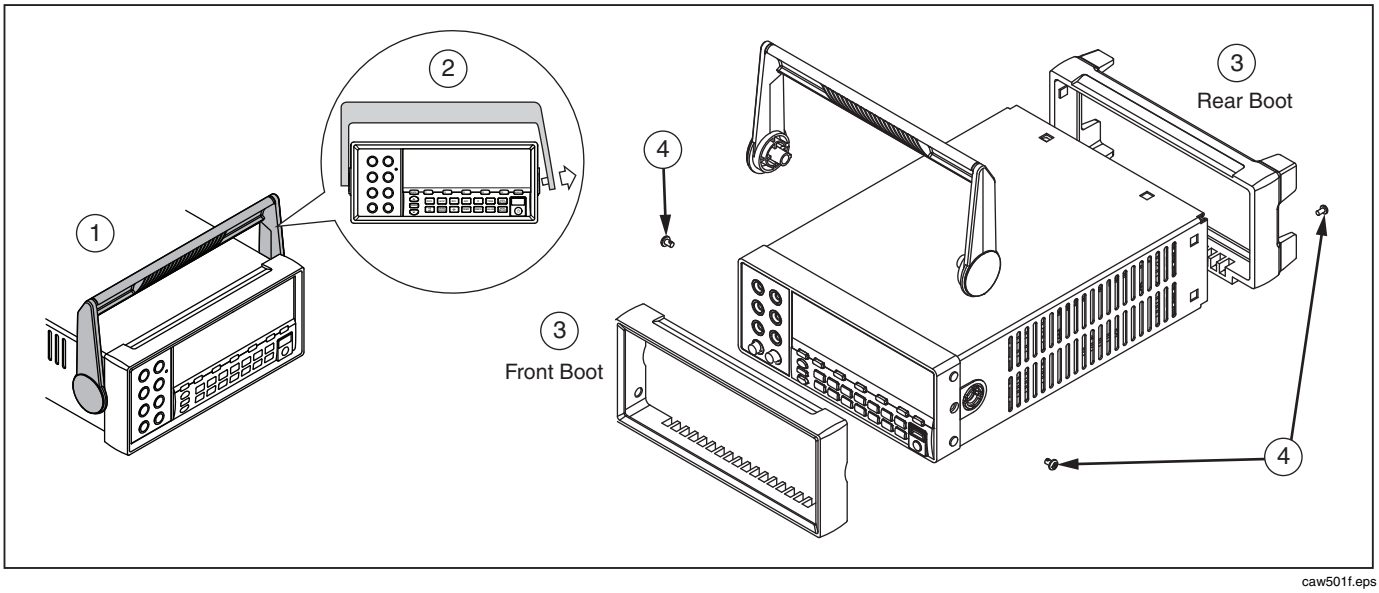

caw501f.eps

Figure 1. Handle and Boot Removal

 ©2006-2010 Fluke Corporation. All rights reserved. Printed in U.S.A.

Installing a Single Rack Mount Kit

The Y8846S Single Rack Mount Kit allows for the mounting of the Meter on either the left or right side of a standard 19-inch rack. The following steps describe mounting the Meter on the left side of the rack.

1. Using one #8-32 x ½" panhead screw, attach the right angle filler plate bracket on the right front side of the Meter, keeping the smooth face with two holes of the bracket facing the front as shown in Figure 2.
2. With the tray flat on a desk with the rack screw ears toward you, place the Meter so the left side of the front frame is against the left wall of the tray.
3. Attach the Meter to the tray by inserting one (two for Hydra series) #8-32 x ½" panhead screw through the left-hand forward holes in the tray and into the side of the Meter as shown in Figure 2.
4. Insert a #6-32 x ½" flathead screw through the hole in the back of the tray and into the back of the Meter as shown in Figure 2.
5. Attach the filler plate bracket on the right side of the Meter to the bottom of the tray with a #6-32 x ¼" flathead screw as shown in Figure 2.
6. Install the 9½" painted filler panel to the right front of the tray by inserting the attached screws through the holes in the right-angle bracket and locking it in with lock washers and lock nuts as shown in Figure 2.
7. Install the assembled rack mount kit in the rack using the four rack screws with the painted 1" wide plate under the screws on the left-hand side of the rack mount tray as shown in Figure 2.
8. Complete the installation by installing the Meter's power cord and other IO accessories through the rear of the rack.

Figure 4 shows the dimensions.

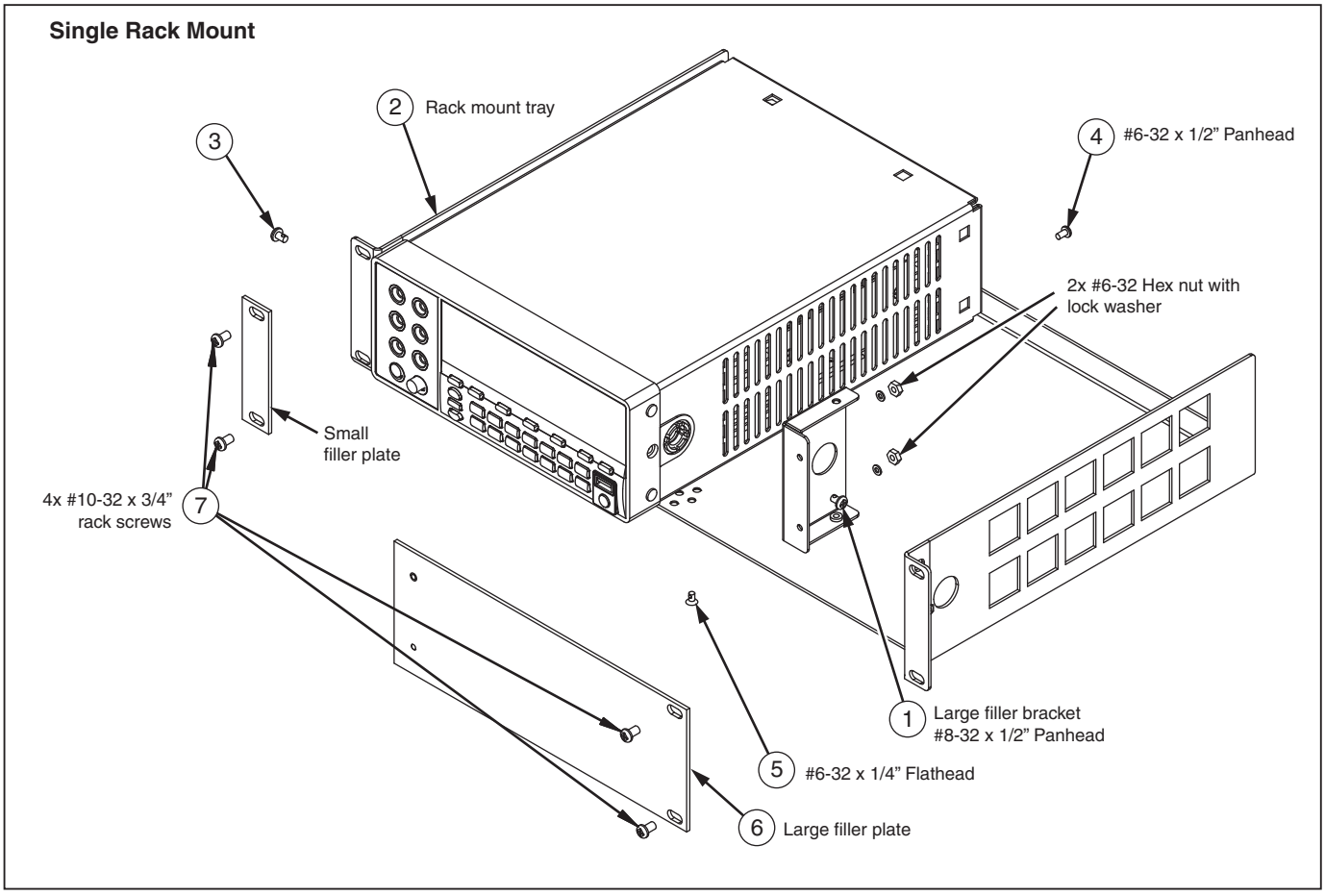

Figure 2. Single Rack Mount

Installing a Dual Rack Mount Kit

To install the Y8846D Dual Rack Mount Kit (not available for Hydra series), first follow the steps 2, 3, and 4 listed under “Installing a Single Rack Mount Kit” earlier in this document. Refer to Figure 3. Next, perform the following steps to install the second Meter:

1. Insert a second #6-32 x ½" flathead screw through the hole in the back of the tray into the back of the second Meter.
2. With the tray flat on a desk with the rack screw ears toward you, place the second Meter so the right side of the front frame is against the right wall of the tray.
3. Insert the Dual Center Mount between the two Meters, keeping the holes on the bottom.
4. Insert two #6-32 x ¼" screws through the bottom of the tray and into the Dual Center Mount.
5. Install the assembled rack mount kit into a rack using the two 1" wide small filler plates and four #10-32 x ¾" Phillips rack screws.
6. Complete the installation by installing the Meter’s power cord and other IO accessories through the rear of the rack.

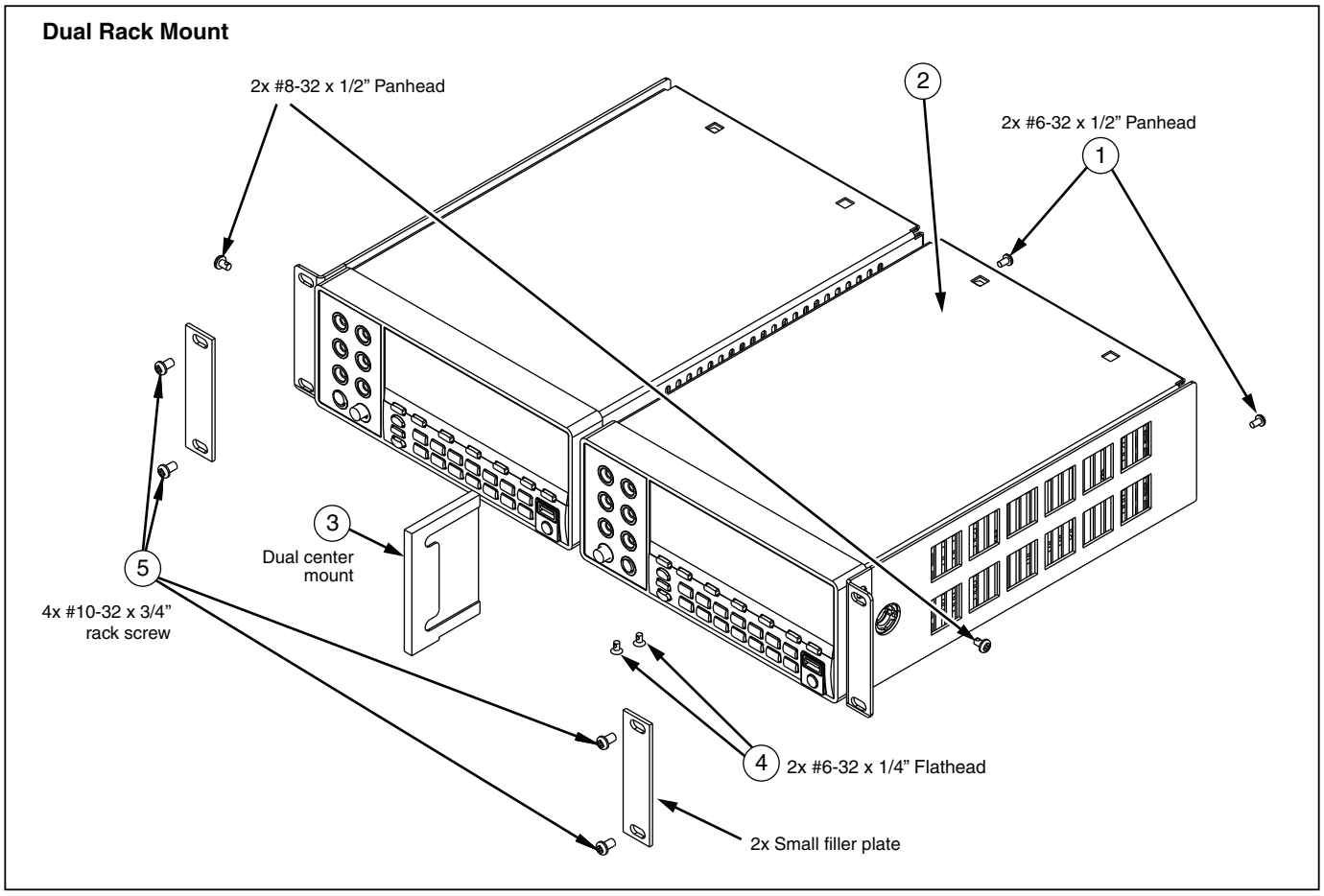

Figure 3. Dual Rack Mount

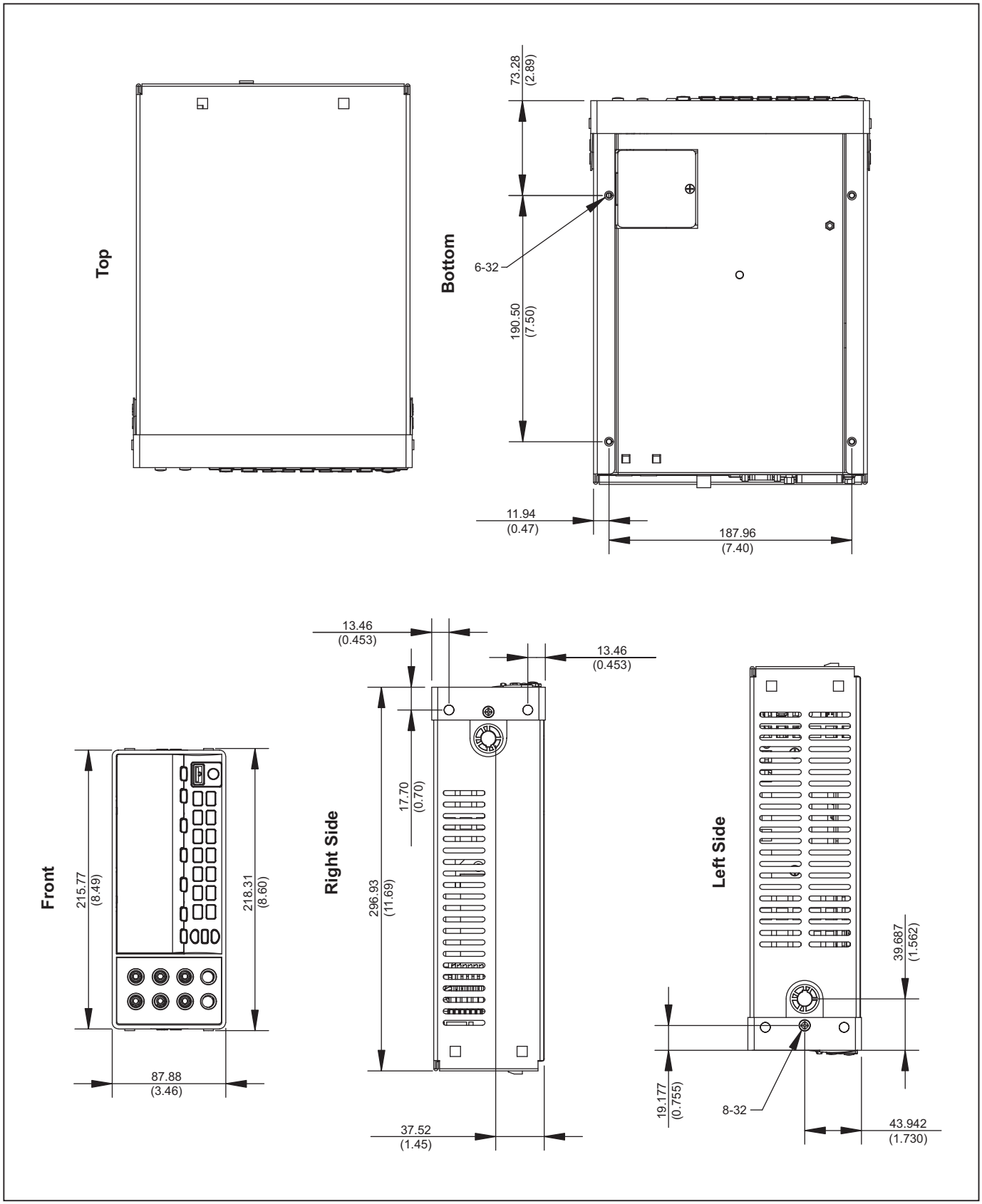

Figure 4. Dimensions