WS2812B

Intelligent control LED integrated light source

Features and Benefits

- Intelligent reverse connect protection, the power supply reverse connection does not damage the IC.
- The control circuit and the LED share the only power source.
- Control circuit and RGB chip are integrated in a package of 5050 components, form a complete control of pixel point.
- Built-in signal reshaping circuit, after wave reshaping to the next driver, ensure wave-form distortion not accumulate.
- Built-in electric reset circuit and power lost reset circuit.
- Each pixel of the three primary color can achieve 256 brightness display, completed 16777216 color full color display, and scan frequency not less than 400Hz/s.
- Cascading port transmission signal by single line.
- Any two point the distance more than 5m transmission signal without any increase circuit.
- When the refresh rate is 30fps, cascade number are not less than1024 points.
- Send data at speeds of 800Kbps.
- The color of the light were highly consistent, cost-effective..

Applications

- Full-color module, Full color soft lights a lamp strip.
- LED decorative lighting, Indoor/outdoor LED video irregular screen.

General description

WS2812B is a intelligent control LED light source that the control circuit and RGB chip are integrated in a package of 5050 components. It internal include intelligent digital port data latch and signal reshaping amplification drive circuit. Also include a precision internal oscillator and a 12V voltage programmable constant current control part, effectively ensuring the pixel point light color height consistent.

The data transfer protocol use single NZR communication mode. After the pixel power-on reset, the DIN port receive data from controller, the first pixel collect initial 24bit data then sent to the internal data latch, the other data which reshaping by the internal signal reshaping amplification circuit sent to the next cascade pixel through the DO port. After transmission for each pixel，the signal to reduce 24bit. pixel adopt auto reshaping transmit technology, making the pixel cascade number is not limited the signal transmission, only depend on the speed of signal transmission.

LED with low driving voltage, environmental protection and energy saving, high brightness, scattering angle is large, good consistency, low power, long life and other advantages. The control chip integrated in LED above becoming more simple circuit, small volume, convenient installation.

WS2812B

Intelligent control LED integrated light source

Mechanical Dimensions

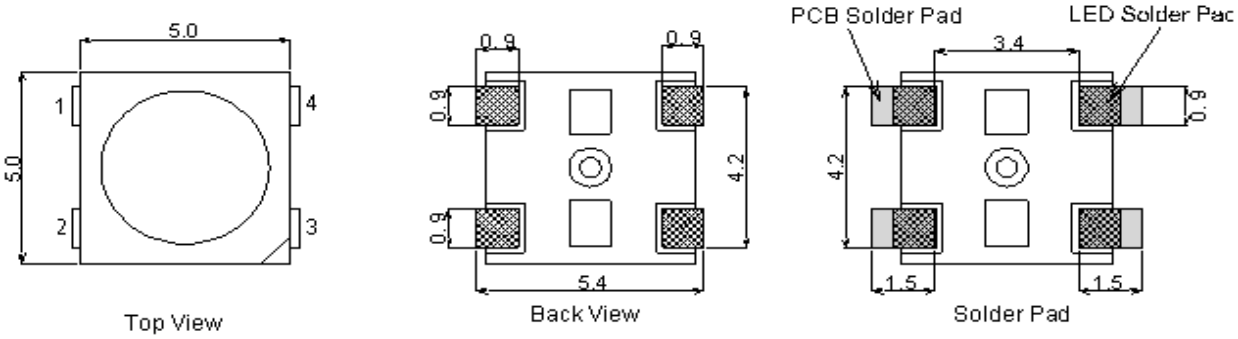

PIN configuration

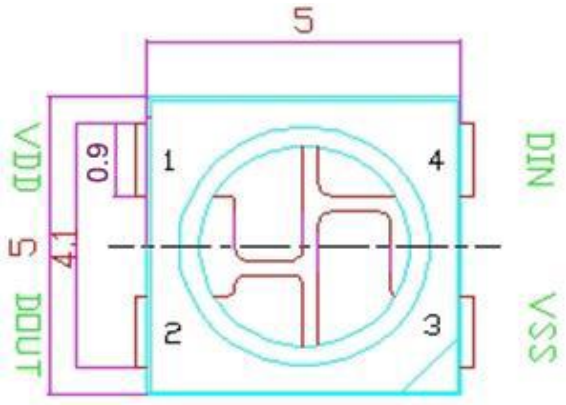

PIN function

NO.	Symbol	Function description
1	VDD	Power supply LED
2	DOUT	Control data signal output
3	VSS	Ground
4	DIN	Control data signal input

Absolute Maximum Ratings

Prameter	Symbol	Ratings	Unit
Power supply voltage	V_{DD}	+3.5~+5.3	V
Input voltage	V_I	-0.5～VDD+0.5	V
Operation junction temperature	Topt	-25～+80	℃
Storage temperature range	Tstg	-40~+105	℃

Electrical Characteristics（T_A=-20～+70℃， V_{DD}=4.5～5.5V,V_{SS}=0V,unless otherwise specified）

Prameter	Smybol	conditions	Min	Tpy	Max	Unit
Input current	I_I	$V_I=V_{DD}/V_{SS}$	——	——	±1	μA
Input voltage level	V_{IH}	D_{IN}，SET	$0.7V_{DD}$	——	——	V
	V_{IL}	D_{IN}，SET	——	——	$0.3\ V_{DD}$	V
Hysteresis voltage	V_H	D_{IN}，SET	——	0.35	——	V

Switching characteristics（T_A=-20～+70℃，V_{DD}=4.5～5.5V,V_{SS}=0V,unless otherwise specified）

Prameter	Symbol	Condition	Min	Tpy	Max	Unit
Transmission delay time	t_{PLZ}	CL=15pF,DIN→ DOUT,RL=10KΩ	——	——	300	ns
Fall time	t_{THZ}	CL=300pF,OUTR/OUTG/OUTB	——	——	120	μs
Input capcity	C_I	——	——	——	15	pF

RGB IC characteristic parameter

Emitting color	Model	Wavelength(nm)	Luminous intensity(mcd)	Voltage(V)
Red	13CBAUP	620-625	390-420	2.0-2.2
Green	13CGAUP	522-525	660-720	3.0-3.4
Blue	10R1MUX	465-467	180-200	3.0-3.4

Data transfer time(TH+TL=1.25μs±600ns)

T0H	0 code ,high voltage time	0.4us	±150ns
T1H	1 code ,high voltage time	0.8us	±150ns
T0L	0 code , low voltage time	0.85us	±150ns
T1L	1 code ,low voltage time	0.45us	±150ns
RES	low voltage time	Above 50μs	

Sequence chart:

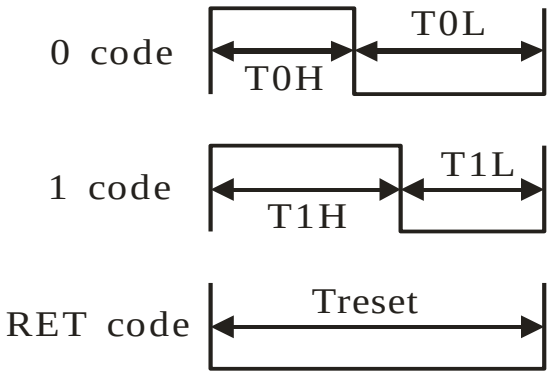

Cascade method:

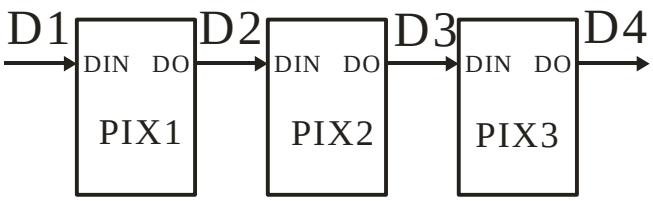

Data transmission method:

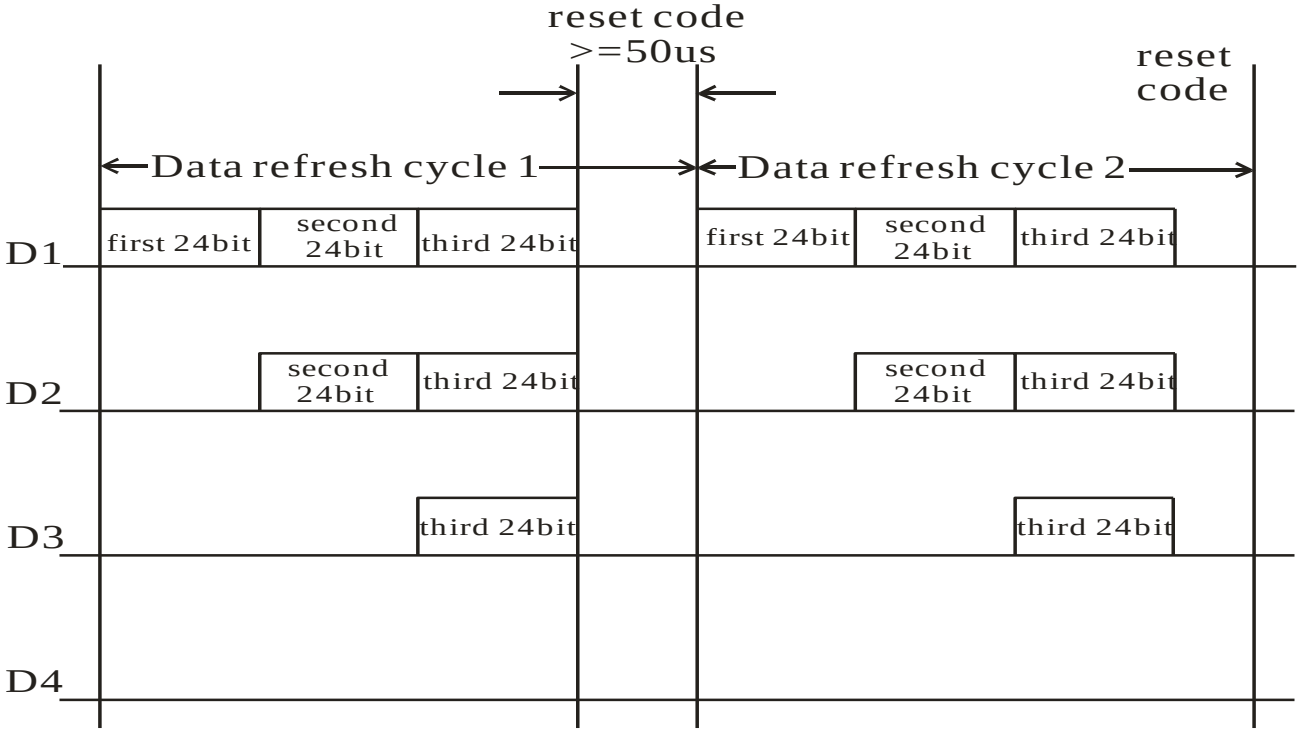

Note: The data of D1 is send by MCU,and D2, D3, D4 through pixel internal reshaping amplification to transmit.

Composition of 24bit data:

G7	G6	G5	G4	G3	G2	G1	G0	R7	R6	R5	R4	R3	R2	R1	R0	B7	B6	B5	B4	B3	B2	B1	B0

Note: Follow the order of GRB to sent data and the high bit sent at first.

Typical application circuit:

