PART NAME	PORTACAB	PART No.	WA-1540 THRU WA-1543	REV. DATE	3-6-06

MATERIAL

BODY ASSEMBLY	0.050 THK. ALUMINUM
FRONT PANEL	0.060 THK. ALUMINUM
HANDLE	VINYL WRAPPED STEEL
HANDLE CAPS	STEEL
FEET	PLASTIC

FINISH

BODY AND PANEL	METALLIC GRAY
HANDLE	WHITE
HANDLE CAPS	NICKEL PLATED
FEET	BLACK

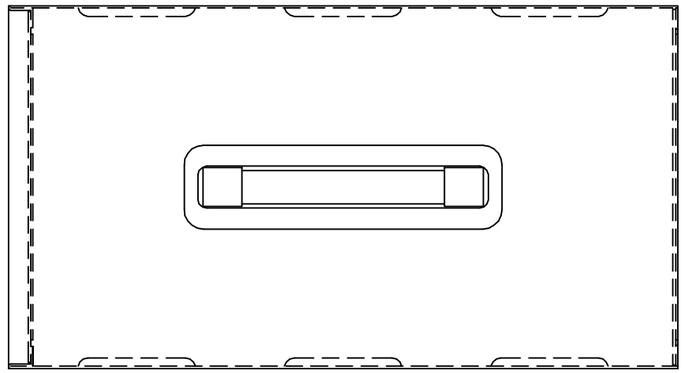

TOP VIEW

FRONT PANEL AND PLASTIC FEET ARE ASSEMBLED WITH #6 SHEET METAL SCREWS. (PROVIDED)

LOUVERS ARE APPROXIMATELY CENTERED ON SIDES.

HANDLE LOAD RATING: 25 LBS. MAX.

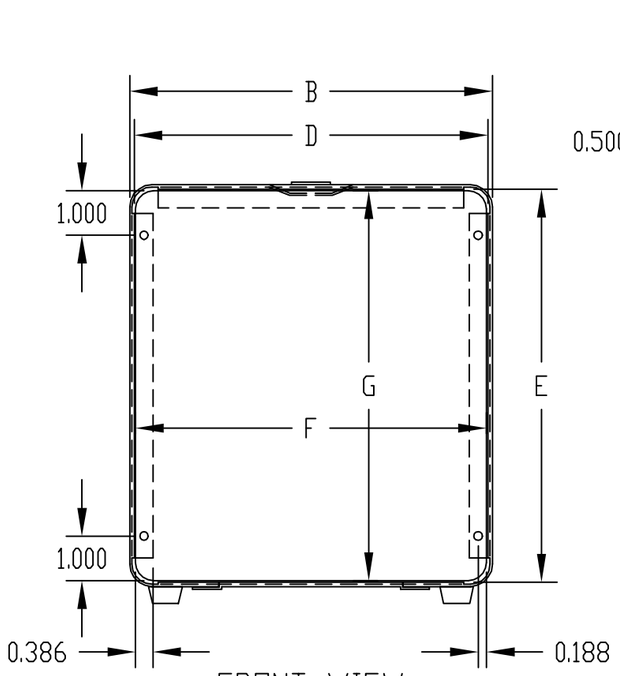

FRONT VIEW

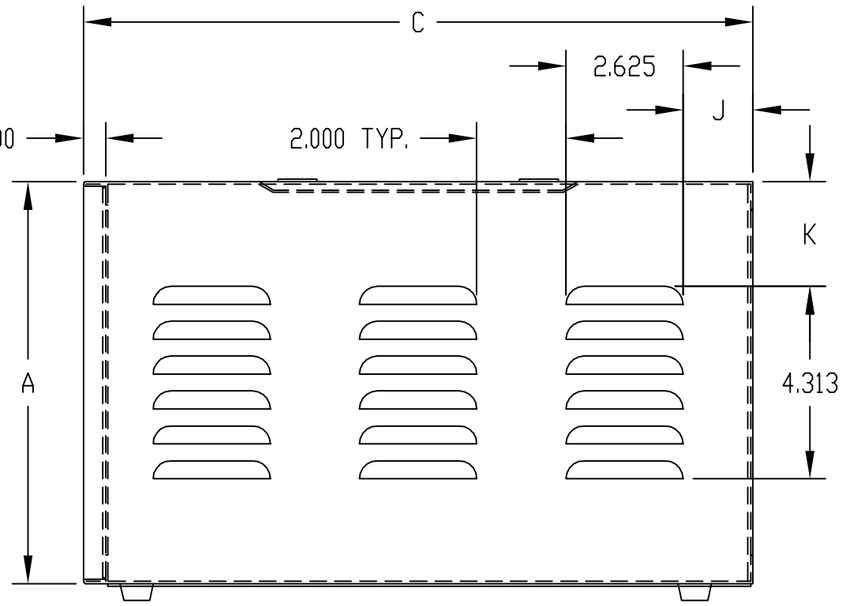

SIDE VIEW

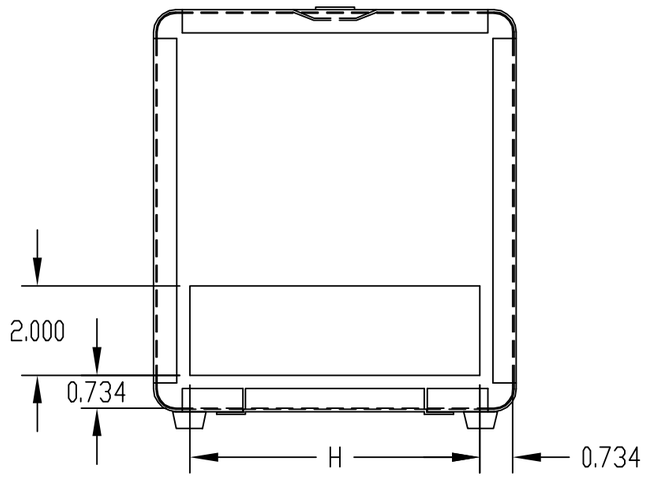

REAR VIEW

PART No.	OVERALL			PANEL SPACE		FRONT PANEL		REAR CUTOUT	LOUVERS			HOUSES CHASSIS
	A	B	C	D	E	F	G	H	J	K	PER SIDE	
WA-1540	8.000	6.125	8.000	5.922	7.797	5.859	7.734	4.500	2.750	1.844	1 SET	AC-402
WA-1541	9.000	8.125	12.000	7.922	8.797	7.859	8.734	6.500	2.438	2.344	2 SETS	AC-407
WA-1542	8.000	10.125	8.000	9.922	7.797	9.859	7.734	8.500	2.688	1.844	1 SET	AC-406
WA-1543	11.000	11.125	18.000	10.922	10.797	10.859	10.734	9.500	3.062	3.344	3 SETS	AC-416

Mouser Electronics

Authorized Distributor

Click to View Pricing, Inventory, Delivery & Lifecycle Information:

Bud Industries:

WA-1542 WA-1543 WA-1541 WA-1540