RoHS compliant

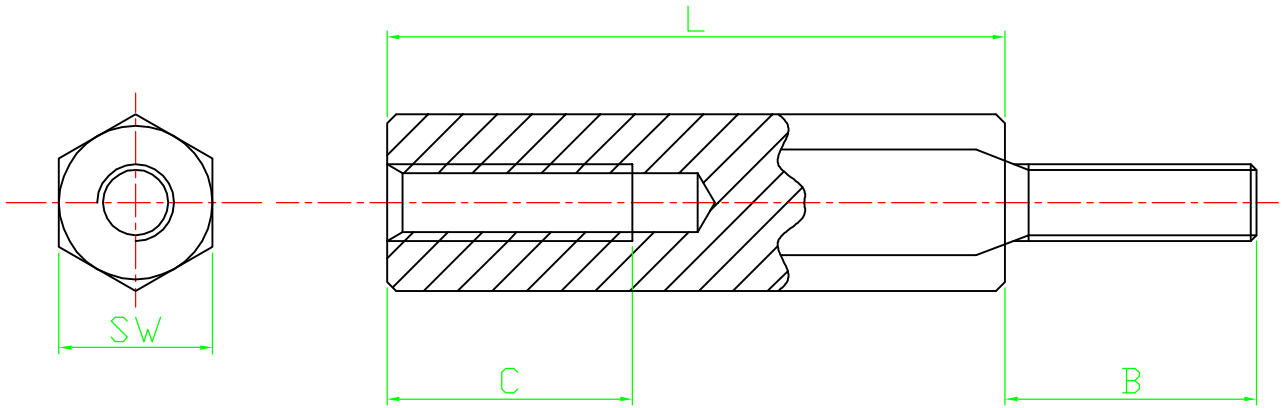

Width across flat(SW)5
Thread M2.5

Option	Dimensions		
	L	B	C min
A	5	6	2.5
B	8	6	5
C	10	6	6
D	12	6	6
E	15	6	6
F	18	6	6
G	20	6	6
H	25	6	6
K	30	6	6

Scale	1:1
TOLERANCE	
X.	±X
X.X	±X
X.XX	±X
DIM	TOL
X.°	±X°
X.X°	±X°
Angle	TOL

Id.	Modification	Date	Name
①	Drawn	20.08.2009	Dean

	Date	Name
Drawn	20.08.2009	Dean
Approved	20.08.2009	Andy

ASSMANN WSW components

Customer-No.

ASSMANN WSW-No. V6622x

Drawing-No. ASS 0493 HS rev01

Replace | Sheet