ULTRX™, TYPE 4X



INDUSTRY STANDARDS

Mounting brackets required to meet UL/CSA external mounting requirements.

UL 508A Listed; Type 3, 3R, 4, 4X, 12, 13; File No. E61997
cUL Listed per CSA C22.2 No 94; Type 3, 3R, 4, 4X, 12, 13; File No. E619977
Enclosure flammability evaluated per UL 508A
Window flammability evaluated per UL 508A

NEMA/EEMAC Type 3, 3R, 4, 4X, 12, 13
CSA File No. 42186: Type 3, 3R, 4, 4X, 12, 13
IEC 60529, IP66
Meets NEMA Type 3RX requirements

APPLICATION

Providing outstanding protection against corrosion and the elements, the clean lines and molded, embossed design of ULTRX™ fiberglass enclosures make them the most stylish and aesthetically pleasing of their class. These enclosures feature hidden hinges, a padlocking capability for security, and flexible internal mounting options.

SPECIFICATIONS

- Compression-molded fiberglass material has excellent temperature and chemical resistance qualities and exhibits outstanding physical properties, including high-impact resistance
- Fiberglass is easily punched, drilled, filed or sawed
- Seamless foam-in-place gasket assures water-tight and dust-tight seal
- Enclosure may be rotated 180 degrees for left and right hinging
- Molded-in drip shields are standard with each enclosure
- Impact-resistant polycarbonate window is permanently bonded in place
- Fiberglass mounting brackets and stainless steel attachment screws are provided with each enclosure
- Unique hinge design allows for standard 180 degree door opening with a maximum opening of 270 degrees
- Door hinges are replaceable
- Type 316 stainless steel quarter-turn latch. Optional keylocking or padlocking handle available.
- Molded-in DIN bosses
- Molded bosses on door provide additional mounting provisions
- Integral mounting rails provide infinite panel adjustment front to back
- Optional data pocket is high-impact thermoplastic

FINISH

Exterior surface painted light-gray acrylic enamel for enhanced UV protection. Optional steel panels are painted white. Optional stainless steel, aluminum, conductive and composite panels are unpainted.

ACCESSORIES

See also Accessories.
H2OMIT™ Vent Drains, Type 4X
H2OMIT™ Thermoelectric Dehumidifier
HOL-SEALERS™ Non-Metallic Hole Seals
Panels for Type 3R, 4, 4X, 12 and 13 Enclosures
Rack Angles (Type RA)

MODIFICATION AND CUSTOMIZATION

Hoffman excels at modifying and customizing products to your specifications. Contact your local Hoffman sales office or distributor for complete information.

BULLETIN: UX1

Standard Product

Catalog Number	Door Style	External Dimensions L x W mm/in.	Internal Dimensions A x B x C mm/in.	Panel	Conductive Panel	Panel Size D x E mm/in.	Mounting G x H mm/in.	Window Size M x N mm/in.	F mm/in.	J mm/in.	K mm/in.	S mm/in.	T mm/in.
UU504020	Solid	513 x 413 20.20 x 16.26	496 x 396 x 220 19.53 x 15.59 x 8.66	A20P16	A20P16G	432 x 330 17.00 x 12.99	359 x 459 14.13 x 18.07	— —	186 7.32	297 11.69	19 0.75	286 11.26	387 15.24
UU504020W	Window	513 x 413 20.20 x 16.26	496 x 396 x 220 19.53 x 15.59 x 8.66	A20P16	A20P16G	439 x 330 17.00 x 12.99	359 x 459 14.13 x 18.07	386 x 286 15.20 x 11.26	186 7.32	297 11.69	19 0.75	286 11.26	387 15.24
UU606020	Solid	625 x 612 24.61 x 24.09	608 x 595 x 220 23.94 x 23.43 x 8.66	A24P24	A24P24G	533 x 533 20.98 x 20.98	559 x 572 22.01 x 22.52	— —	186 7.32	500 19.68	21 0.83	489 19.25	489 19.25
UU606020W	Window	625 x 612 24.61 x 24.09	608 x 595 x 220 23.94 x 23.43 x 8.66	A24P24	A24P24G	533 x 533 20.98 x 20.98	559 x 572 22.01 x 22.52	498 x 486 19.61 x 19.13	186 7.32	500 19.68	21 0.83	489 19.25	489 19.25
UU605025	Solid	625 x 513 24.61 x 20.20	608 x 496 x 270 23.94 x 19.53 x 10.63	A24P20	A24P20G	533 x 432 20.98 x 17.00	457 x 570 17.99 x 22.44	— —	239 9.41	400 15.75	21 0.83	387 15.24	489 19.25
UU605025W	Window	625 x 513 24.61 x 20.20	608 x 496 x 270 23.94 x 19.53 x 10.63	A24P20	A24P20G	533 x 432 20.98 x 17.00	457 x 570 17.99 x 22.44	498 x 386 19.61 x 15.20	239 9.41	400 15.75	21 0.83	387 15.24	489 19.25
UU504030	Solid	513 x 412 20.20 x 16.22	496 x 395 x 321 19.53 x 15.55 x 12.64	A20P16	A20P16G	432 x 330 17.00 x 12.99	355 x 455 13.98 x 17.91	— —	287 11.30	300 11.81	19 0.75	286 11.26	387 15.24
UU504030W	Window	513 x 412 20.20 x 16.22	496 x 395 x 321 19.53 x 15.55 x 12.64	A20P16	A20P16G	432 x 330 17.00 x 12.99	355 x 455 13.98 x 17.91	386 x 286 15.20 x 11.26	287 11.30	300 11.81	19 0.75	286 11.26	387 15.24
UU606030	Solid	625 x 612 24.61 x 24.09	608 x 595 x 321 23.94 x 23.43 x 12.64	A24P24	A24P24G	533 x 533 20.98 x 20.98	555 x 568 21.85 x 22.36	— —	287 11.30	500 19.68	21 0.83	489 19.25	489 19.25
UU606030W	Window	625 x 612 24.61 x 24.09	608 x 595 x 321 23.94 x 23.43 x 12.64	A24P24	A24P24G	533 x 533 20.98 x 20.98	555 x 568 21.85 x 22.36	498 x 486 19.61 x 19.13	287 11.30	500 19.68	21 0.83	489 19.25	489 19.25
UU756030	Solid	775 x 612 30.51 x 24.09	758 x 595 x 321 29.84 x 23.43 x 12.64	A30P24	A30P24G	686 x 533 27.01 x 20.98	555 x 718 21.85 x 28.27	— —	287 11.30	500 19.68	21 0.83	489 19.25	641 25.24

Catalog Number	Door Style	External Dimensions L x W mm/in.	Internal Dimensions A x B x C mm/in.	Panel	Conductive Panel	Panel Size D x E mm/in.	Mounting G x H mm/in.	Window Size M x N mm/in.	F mm/in.	J mm/in.	K mm/in.	S mm/in.	T mm/in.
UU756030W	Window	775 x 612 30.51 x 24.09	758 x 595 x 321 29.84 x 23.43 x 12.64	A30P24	A30P24G	686 x 533 27.01 x 20.98	555 x 718 21.85 x 28.27	648 x 486 25.51 x 19.13	287 11.30	500 19.68	21 0.83	489 19.25	641 25.24
UU1008030	Solid	1025 x 825 40.35 x 32.48	1008 x 808 x 321 39.68 x 31.81 x 12.64	A40P30	A40P30G	940 x 737 37.01 x 29.02	768 x 968 30.24 x 38.11	— —	287 11.30	700 27.56	23 0.91	692 27.24	895 35.24
UU1008030W	Window	1025 x 825 40.35 x 32.48	1008 x 808 x 321 39.68 x 31.81 x 12.64	A40P30	A40P30G	940 x 737 37.01 x 29.02	768 x 968 30.24 x 38.11	898 x 698 35.35 x 27.48	287 11.30	700 27.56	23 0.91	692 27.24	895 35.24
UU606040	Solid	625 x 612 24.61 x 24.09	608 x 595 x 421 23.94 x 23.43 x 16.57	A24P24	A24P24G	533 x 533 20.98 x 20.98	555 x 568 21.85 x 22.36	— —	387 15.24	500 19.68	21 0.83	489 19.25	489 19.25
UU606040W	Window	625 x 612 24.61 x 24.09	608 x 595 x 421 23.94 x 23.43 x 16.57	A24P24	A24P24G	533 x 533 20.98 x 20.98	555 x 568 21.85 x 22.36	498 x 486 19.61 x 19.13	387 15.24	500 19.68	21 0.83	489 19.25	489 19.25
UU756040	Solid	775 x 612 30.51 x 24.09	758 x 595 x 421 29.84 x 23.43 x 16.57	A30P24	A30P24G	686 x 533 27.01 x 20.98	555 x 718 21.85 x 28.27	— —	387 15.24	500 19.68	21 0.83	489 19.25	641 25.24
UU756040W	Window	775 x 612 30.51 x 24.09	758 x 595 x 421 29.84 x 23.43 x 16.57	A30P24	A30P24G	686 x 533 27.01 x 20.98	555 x 718 21.85 x 28.27	648 x 486 25.51 x 19.13	387 15.24	500 19.68	21 0.83	489 19.25	641 25.24

Purchase panels separately.

Note: When installing enclosures in a right-hand hinge application that involves vibration, Hoffman recommends the use of pad-locking or key-locking quarter-turn latch accessories for door securement (UUHPL, UUHKL).

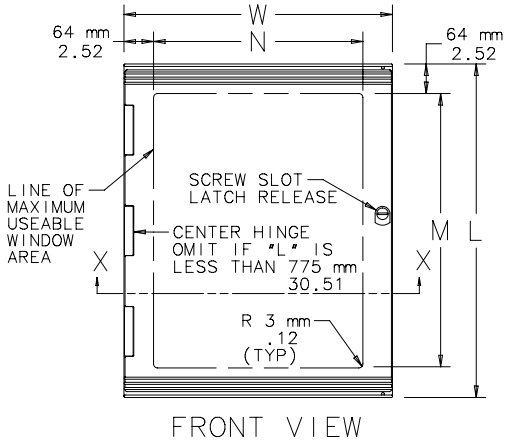

FRONT VIEW

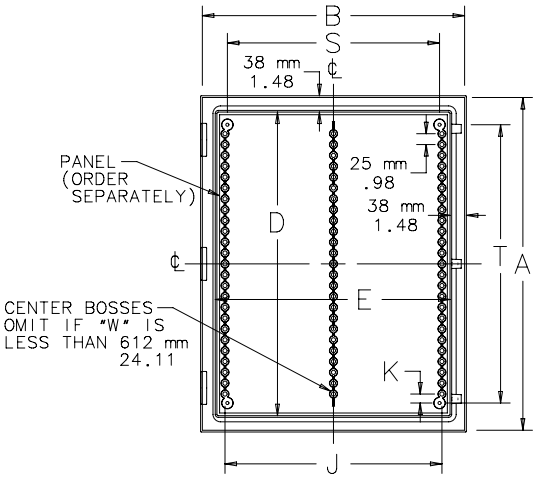

FRONT VIEW WITH DOOR REMOVED

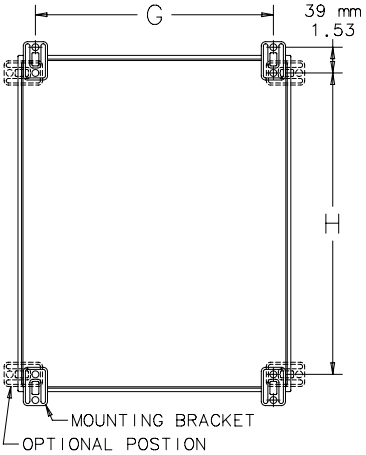

BACK VIEW

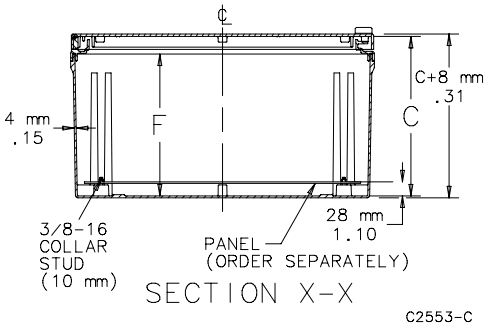

SECTION X-X

C2553-C

PANEL BRACKET KIT

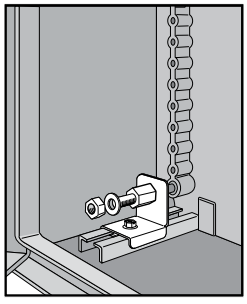

Catalog Number	Description	Pkg. Qty.
UUPB	ULTRX Panel Bracket Kit	4

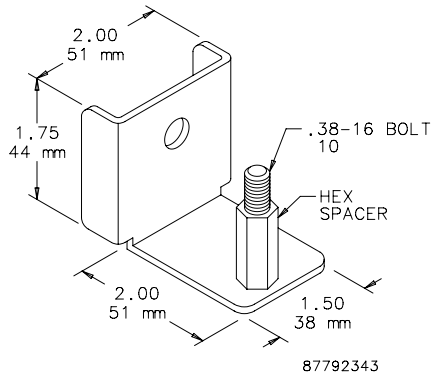

Panel Bracket Kit is used with steel panels and permits panel adjustment from front to rear. Fits all ULTRX sizes. Mounts on integrally molded body rail. Brackets are plated steel. All mounting hardware is included. *Note: Front mounting position is approximately 140mm/5.5 in. back on 400mm enclosures.*

BULLETIN: UX1Y

SWING-OUT PANEL

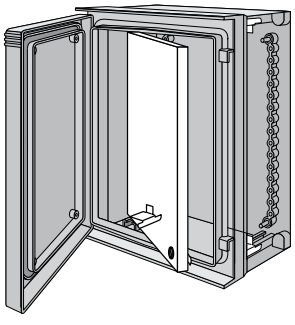

Catalog Number	Fits A x B mm/in.	L mm/in.	W mm/in.
UU5040SP	513 x 413 20.20 x 16.26	432 17.00	330 12.99
UU6050SP	625 x 513 24.61 x 20.20	536 21.10	432 17.00
UU6060SP	625 x 612 24.61 x 24.09	540 21.25	535 21.08
UU7560SP	775 x 612 30.51 x 24.09	687 27.05	535 21.08
UU10080SP	1025 x 825 40.35 x 32.48	935 36.80	737 29.00

Use UU6060SP with DATACOM ULTRX Fiberglass Type 4X WiFi Cabinet.

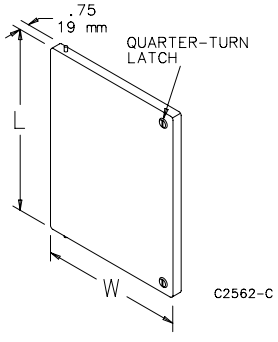

Installs front-mounted panels in ULTRX fiberglass enclosures. The front-mounted swing panel complements window-door units and is suited for any application requiring a display of gauges, dials or any type of control equipment monitor. Made of 14 gauge plated steel. Easy installation; no drilling required. Fully adjustable front to rear. Panel and mounting hardware included.
Note: Front mounting position is approximately 140mm/5.5 in. back on 400mm enclosures.

BULLETIN: UX1Y

GROUNDING DEVICE

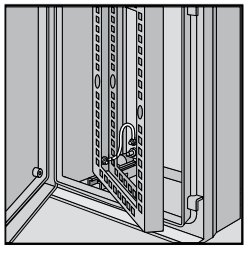

Grounding Device provides a means to attach a grounding conductor to an ULTRX Swing-Out Panel or Swing-Out Frame. Includes all installation hardware and instructions.

BULLETIN: UX1Y

Catalog Number	Description
UUGK	ULTRX Grounding Device

PANELS FOR TYPE 3R, 4, 4X, 12 AND 13 ENCLOSURES

Steel panels are 12 gauge with a white finish. Panel mounting hardware is furnished with all enclosures which accept these panels.

BULLETIN: DWS12, PNLWM

Catalog Number	Panel Gauge	Flange Thickness T (in.)	Flange Thickness T (mm)	Panel Size D x E (in.)	Panel Size D x E (mm)	Number of Holes	Edge Flanges
A20P16	12	—	—	17.00 x 13.00	432 x 330	4	0
A24P20	—	0.75	19	21.00 x 17.00	533 x 432	4	2
A24P24	—	0.75	19	21.00 x 21.00	533 x 533	4	2
A24P24WD	—	0.75	19	21.00 x 21.00	533 x 533	4	—
A30P24	—	0.75	19	27.00 x 21.00	686 x 533	4	2
A40P30	—	0.75	19	37.00 x 29.00	940 x 737	4	4

Catalog number with "WD" is wood.

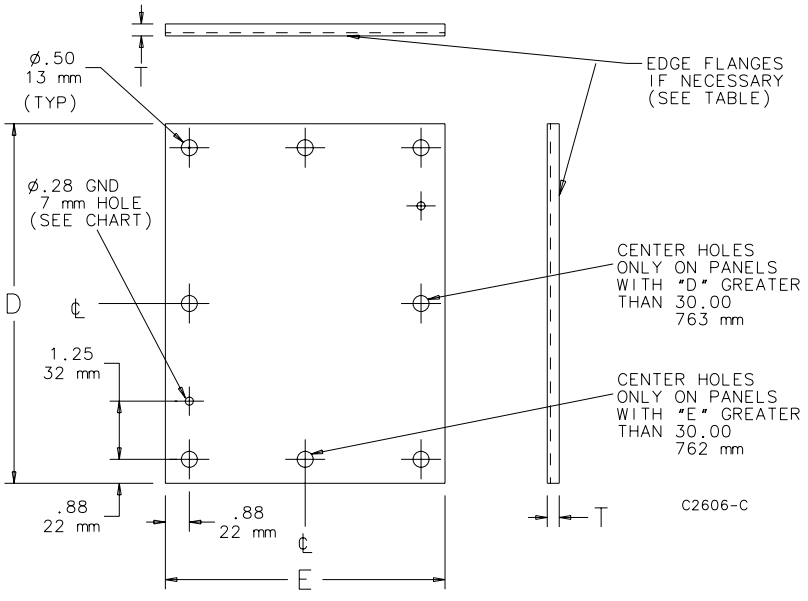

RACK ANGLES (TYPE RA)

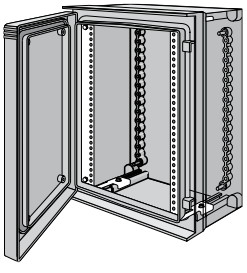

Pairs of full-length rack-mounting angles are available for mounting 1- in. (483-mm) rack-mounted equipment. Type RA angles are 14 gauge steel with .281-in. (7-mm) diameter mounting holes, spaced per EIA standard RS-310-D (universal spacing). Use Clip Nut Package (AN1032) to provide tapped holes at desired locations. Angles and mounting hardware are plated steel. Mounting hardware is furnished.

BULLETIN: UX1Y

Catalog Number	Fits A x B mm/in.	L mm/in.	N mm/in.	Rack Units	Pkg. Qty.
UURA6060	610 x 610 24.00 x 24.00	552 21.75	10 .38	12	2
UURA7560	762 x 610 30.00 x 24.00	705 27.75	19 .75	15	2

Use UURA6060 with DATACOM ULTRX Fiberglass Type 4X WiFi Cabinet.

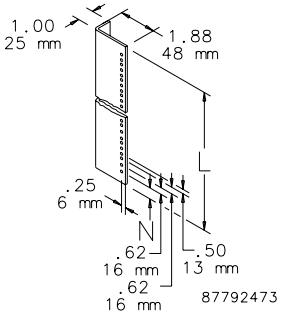

KEYLOCK KIT AND PADLOCK KIT

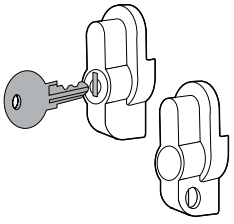

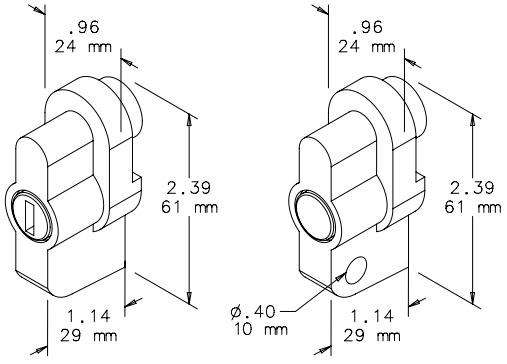

Keylock Kit **Padlock Kit**

87792346

Keylock Kit or pushbutton-style Padlock Kit is easily inserted in latch hole to prevent unauthorized personnel from gaining access to enclosure contents. Each kit is fully assembled for easy installation in the field. Type 316 stainless steel construction.

BULLETIN: UX1Y

Catalog Number	Description
UUHKL	Keylock Kit
UUHPL	Padlock Kit

UUHKL: Internal key components are not stainless steel.

UUHPL: Handles maintain UL 508A, Type 3, 4, 4X and 12 when properly installed on a Hoffman enclosure. Set up for 1/4-in. or 3/8-in. padlock.

SWING FRAME

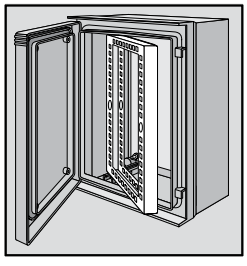

Catalog Number	Fits A x B mm/in.	L mm/in.	W mm/in.	Rack Units
UU6060SF	610 x 610 24.00 x 24.00	540 21.25	535 21.08	11
UU7560SF	762 x 610 30.00 x 24.00	687 27.05	535 21.08	14

Use UU6060SF with DATACOM ULTRX Fiberglass Type 4X WiFi Cabinet.

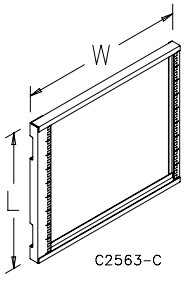

Swing Frame provides 19-in. rack-mounting capabilities with U-Style (Type RA) mounting hole pattern. Quarter-turn latch has 100-degree swing. Adjustable mounting provision. 14 gauge plated steel. Includes mounting hardware. Swing frame maintains enclosure rating if properly installed in a Hoffman enclosure. *Note: Front mounting position is approximately 140mm/5.5 in. back on 400mm enclosures.*

BULLETIN: UX1Y

DOOR STOP KIT

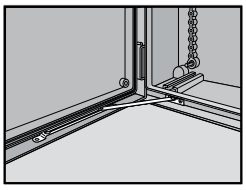

Door Stop Kit limits door to 120-degree opening. Field installable on all sizes of ULTRX enclosures. Type 304 stainless steel construction.

BULLETIN: UX1Y

Catalog Number	Description
UUDS	Door Stop Kit

ULTRX™ KEY INSERT

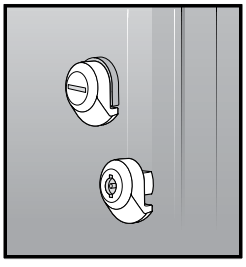

Inserts can be substituted for the standard quarter-turn latch. Inserts are Type 316 stainless steel.

BULLETIN: UX1Y

Catalog Number	Insert Type
UUL3DB	Double-bit 3 mm
UULSC	Screw driver slot

ULTRX™ MOUNTING BRACKET KIT

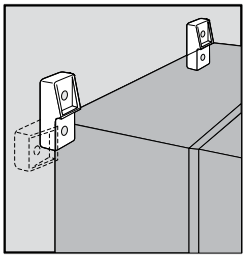

Kit is field-installable. Corrosion-resistant fiberglass material. Type 316 stainless steel mounting hardware is included. Four mounting brackets per kit.

BULLETIN: UX1Y

Catalog Number	Description	Kit Qty.
UUMF	Mounting Bracket Kit	4

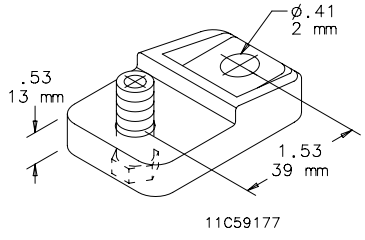

11C59177

SCREW INSERT KIT



Brass threaded inserts (10-32) with plated screws. Used on door bosses and DIN bosses.

BULLETIN: UX1Y

Catalog Number	Description	Kit Qty.
UUMH2	Screw Insert Kit	4 inserts and 4 screws

SELF-TAPPING SCREWS

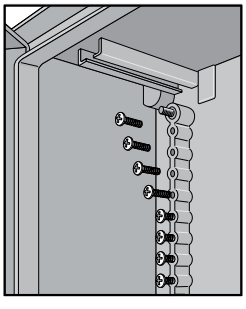

Plated screws (1/4-15 x .88) mount panels and accessories to DIN bosses on back of enclosure.

BULLETIN: UX1Y

Catalog Number	Description	Pkg. Qty.
UUMH1	Self-Tapping Screws	10