Order this document by ULN2803/D

MOTOROLA

Octal High Voltage, High Current Darlington Transistor Arrays

ULN2803
ULN2804

OCTAL PERIPHERAL DRIVER ARRAYS

SEMICONDUCTOR TECHNICAL DATA

The eight NPN Darlington connected transistors in this family of arrays are ideally suited for interfacing between low logic level digital circuitry (such as TTL, CMOS or PMOS/NMOS) and the higher current/voltage requirements of lamps, relays, printer hammers or other similar loads for a broad range of computer, industrial, and consumer applications. All devices feature open–collector outputs and free wheeling clamp diodes for transient suppression.

The ULN2803 is designed to be compatible with standard TTL families while the ULN2804 is optimized for 6 to 15 volt high level CMOS or PMOS.

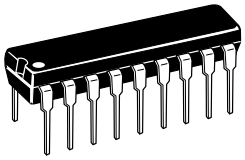

A SUFFIX
PLASTIC PACKAGE
CASE 707

MAXIMUM RATINGS (T_A = 25°C and rating apply to any one device in the package, unless otherwise noted.)

Rating	Symbol	Value	Unit
Output Voltage	V_O	50	V
Input Voltage (Except ULN2801)	V_I	30	V
Collector Current – Continuous	I_C	500	mA
Base Current – Continuous	I_B	25	mA
Operating Ambient Temperature Range	T_A	0 to +70	°C
Storage Temperature Range	T_{stg}	–55 to +150	°C
Junction Temperature	T_J	125	°C

$R_{\theta JA}$ = 55°C/W
Do not exceed maximum current limit per driver.

PIN CONNECTIONS

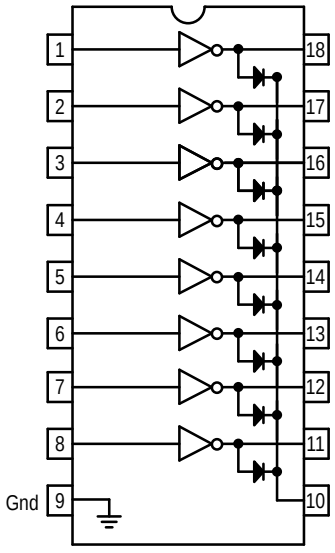

ORDERING INFORMATION

Device	Characteristics		
	Input Compatibility	V_{CE}(Max)/I_C(Max)	Operating Temperature Range
ULN2803A ULN2804A	TTL, 5.0 V CMOS 6 to 15 V CMOS, PMOS	50 V/500 mA	T_A = 0 to + 70°C

© Motorola, Inc. 1996

ELECTRICAL CHARACTERISTICS (T_A = 25°C, unless otherwise noted)

Characteristic		Symbol	Min	Typ	Max	Unit
Output Leakage Current (Figure 1)		I_{CEX}				μA
(V_O = 50 V, T_A = +70°C)	All Types		–	–	100	
(V_O = 50 V, T_A = +25°C)	All Types		–	–	50	
(V_O = 50 V, T_A = +70°C, V_I = 6.0 V)	ULN2802		–	–	500	
(V_O = 50 V, T_A = +70°C, V_I = 1.0 V)	ULN2804		–	–	500	
Collector–Emitter Saturation Voltage (Figure 2)		$V_{CE(sat)}$				V
(I_C = 350 mA, I_B = 500 μA)	All Types		–	1.1	1.6	
(I_C = 200 mA, I_B = 350 μA)	All Types		–	0.95	1.3	
(I_C = 100 mA, I_B = 250 μA)	All Types		–	0.85	1.1	
Input Current – On Condition (Figure 4)		$I_{I(on)}$				mA
(V_I = 17 V)	ULN2802		–	0.82	1.25	
(V_I = 3.85 V)	ULN2803		–	0.93	1.35	
(V_I = 5.0 V)	ULN2804		–	0.35	0.5	
(V_I = 12 V)	ULN2804		–	1.0	1.45	
Input Voltage – On Condition (Figure 5)		$V_{I(on)}$				V
(V_{CE} = 2.0 V, I_C = 300 mA)	ULN2802		–	–	13	
(V_{CE} = 2.0 V, I_C = 200 mA)	ULN2803		–	–	2.4	
(V_{CE} = 2.0 V, I_C = 250 mA)	ULN2803		–	–	2.7	
(V_{CE} = 2.0 V, I_C = 300 mA)	ULN2803		–	–	3.0	
(V_{CE} = 2.0 V, I_C = 125 mA)	ULN2804		–	–	5.0	
(V_{CE} = 2.0 V, I_C = 200 mA)	ULN2804		–	–	6.0	
(V_{CE} = 2.0 V, I_C = 275 mA)	ULN2804		–	–	7.0	
(V_{CE} = 2.0 V, I_C = 350 mA)	ULN2804		–	–	8.0	
Input Current – Off Condition (Figure 3) (I_C = 500 μA, T_A = +70°C)	All Types	$I_{I(off)}$	50	100	–	μA
DC Current Gain (Figure 2) (V_{CE} = 2.0 V, I_C = 350 mA)	ULN2801	h_{FE}	1000	–	–	–
Input Capacitance		C_I	–	15	25	pF
Turn–On Delay Time (50% E_I to 50% E_O)		t_{on}	–	0.25	1.0	μs
Turn–Off Delay Time (50% E_I to 50% E_O)		t_{off}	–	0.25	1.0	μs
Clamp Diode Leakage Current (Figure 6) (V_R = 50 V)	T_A = +25°C T_A = +70°C	I_R	–	–	50 100	μA
Clamp Diode Forward Voltage (Figure 7) (I_F = 350 mA)		V_F	–	1.5	2.0	V

TEST FIGURES

(See Figure Numbers in Electrical Characteristics Table)

Figure 1.

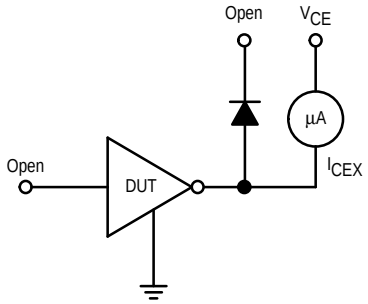

Figure 2.

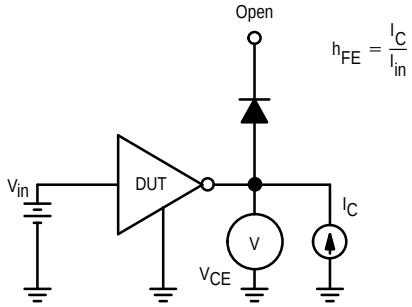

Figure 3.

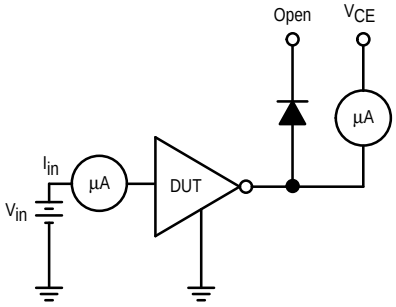

Figure 4.

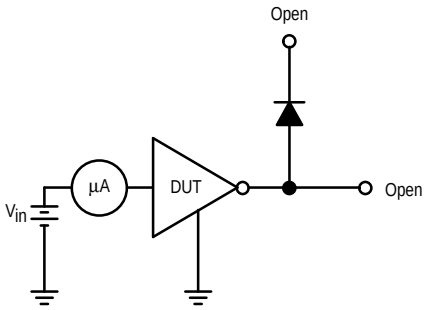

Figure 5.

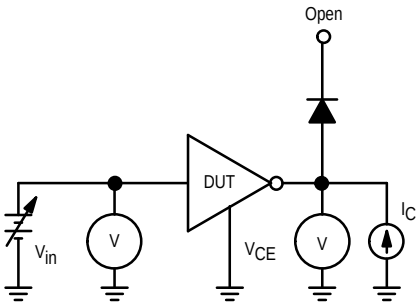

Figure 6.

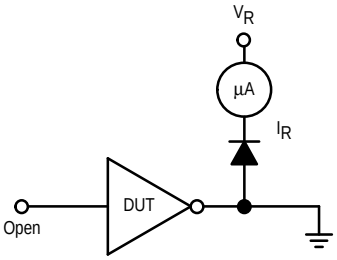

Figure 7.

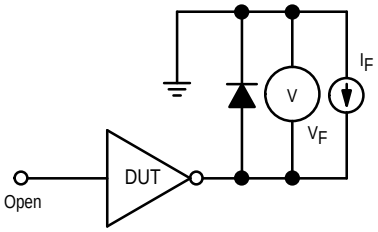

TYPICAL CHARACTERISTIC CURVES – T_A = 25°C, unless otherwise noted

Output Characteristics

Figure 8. Output Current versus Saturation Voltage

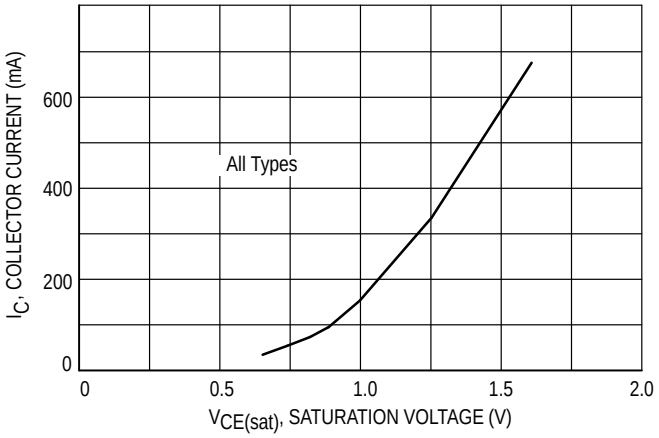

Figure 9. Output Current versus Input Current

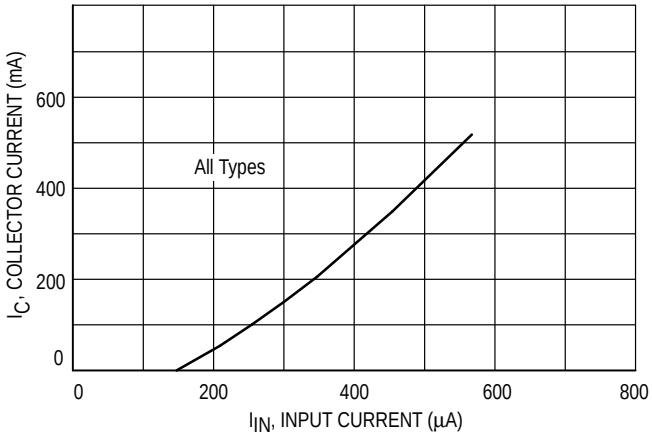

Input Characteristics

Figure 10. ULN2803 Input Current versus Input Voltage

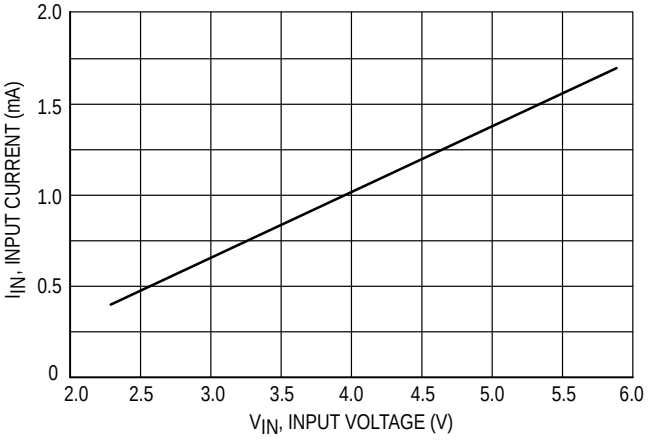

Figure 11. ULN2804 Input Current versus Input Voltage

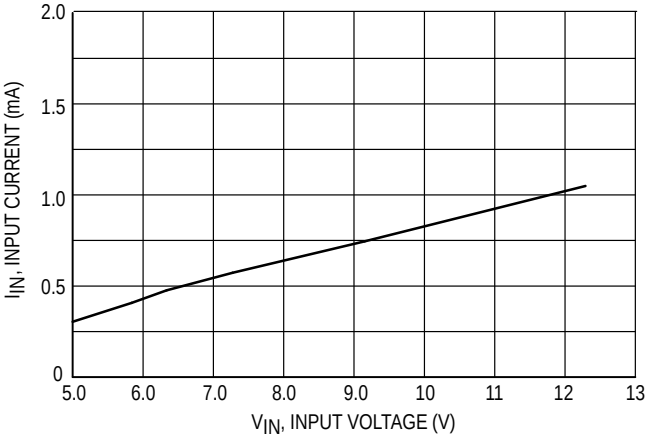

Figure 12. Representative Schematic Diagrams

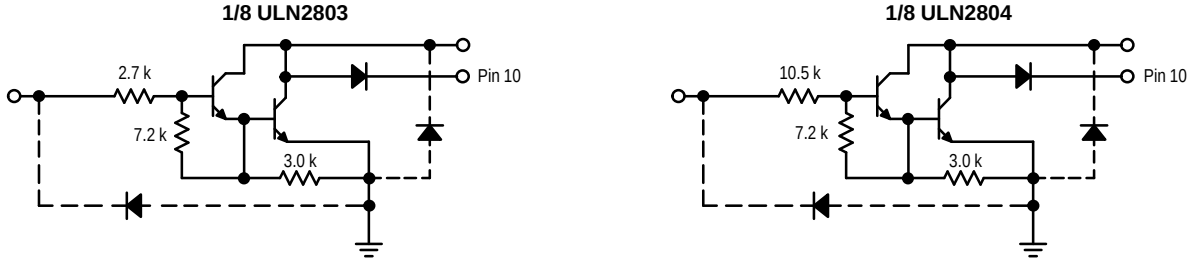

OUTLINE DIMENSIONS

A SUFFIX
PLASTIC PACKAGE
CASE 707–02
ISSUE C

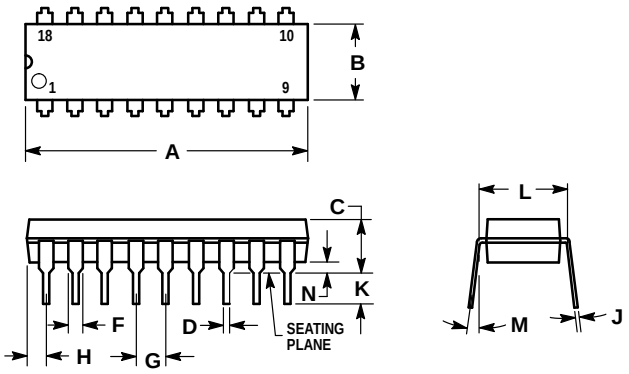

NOTES:
1. POSITIONAL TOLERANCE OF LEADS (D), SHALL BE WITHIN 0.25 (0.010) AT MAXIMUM MATERIAL CONDITION, IN RELATION TO SEATING PLANE AND EACH OTHER.
2. DIMENSION L TO CENTER OF LEADS WHEN FORMED PARALLEL.
3. DIMENSION B DOES NOT INCLUDE MOLD FLASH.

	MILLIMETERS		INCHES	
DIM	MIN	MAX	MIN	MAX
A	22.22	23.24	0.875	0.915
B	6.10	6.60	0.240	0.260
C	3.56	4.57	0.140	0.180
D	0.36	0.56	0.014	0.022
F	1.27	1.78	0.050	0.070
G	2.54 BSC		0.100 BSC	
H	1.02	1.52	0.040	0.060
J	0.20	0.30	0.008	0.012
K	2.92	3.43	0.115	0.135
L	7.62 BSC		0.300 BSC	
M	0 °	15 °	0 °	15 °
N	0.51	1.02	0.020	0.040

Motorola reserves the right to make changes without further notice to any products herein. Motorola makes no warranty, representation or guarantee regarding the suitability of its products for any particular purpose, nor does Motorola assume any liability arising out of the application or use of any product or circuit, and specifically disclaims any and all liability, including without limitation consequential or incidental damages. “Typical” parameters which may be provided in Motorola data sheets and/or specifications can and do vary in different applications and actual performance may vary over time. All operating parameters, including “Typicals” must be validated for each customer application by customer’s technical experts. Motorola does not convey any license under its patent rights nor the rights of others. Motorola products are not designed, intended, or authorized for use as components in systems intended for surgical implant into the body, or other applications intended to support or sustain life, or for any other application in which the failure of the Motorola product could create a situation where personal injury or death may occur. Should Buyer purchase or use Motorola products for any such unintended or unauthorized application, Buyer shall indemnify and hold Motorola and its officers, employees, subsidiaries, affiliates, and distributors harmless against all claims, costs, damages, and expenses, and reasonable attorney fees arising out of, directly or indirectly, any claim of personal injury or death associated with such unintended or unauthorized use, even if such claim alleges that Motorola was negligent regarding the design or manufacture of the part. Motorola and Ⓜ are registered trademarks of Motorola, Inc. Motorola, Inc. is an Equal Opportunity/Affirmative Action Employer.

How to reach us:

USA / EUROPE / Locations Not Listed: Motorola Literature Distribution; P.O. Box 20912; Phoenix, Arizona 85036. 1–800–441–2447 or 602–303–5454

MFAX: RMFAX0@email.sps.mot.com – TOUCHTONE 602–244–6609

INTERNET: http://Design–NET.com

JAPAN: Nippon Motorola Ltd.; Tatsumi–SPD–JLDC, 6F Seibu–Butsuryu–Center, 3–14–2 Tatsumi Koto–Ku, Tokyo 135, Japan. 03–81–3521–8315

ASIA / PACIFIC: Motorola Semiconductors H.K. Ltd.; 8B Tai Ping Industrial Park, 51 Ting Kok Road, Tai Po, N.T., Hong Kong. 852–26629298