UAC-BL UAC-BK Cabinet Handle

TOCHIGIYA GREEN PRODUCT



■Characteristic

The handle which installs from the front side of panel.
It has the shape and size for easy gripping.
Excellent performances on reliability and stability.

■Application

Machine tools / Jigs and tools / Special equipment vehicles / Telecommunication devices on vehicles / Audio devices, etc.

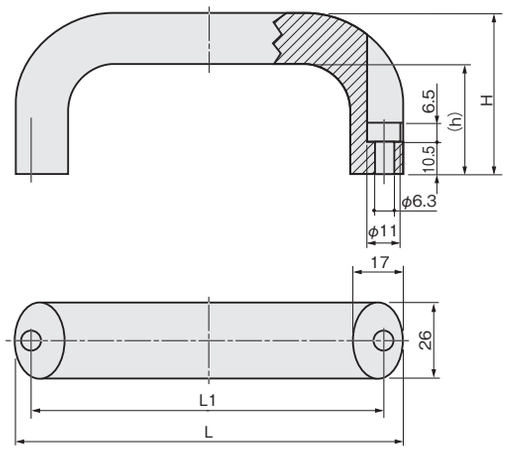

■Specification

Model Type	Material	Finish
UAC-BL	Aluminum Alloy	Barrel Polishing
UAC-BK		Electrostatic Painting (Flat Black)

UAC-BL (Barrel Polishing)		UAC-BK (Painting)		Size Applied for Both					
Model No.	Code No.	Model No.	Code No.	L	L1	H	h	Allowable Vertical Load kN (kgf)	Net Weight (g)
UAC-26x116-BL	3271	UAC-26x116-BK	3275	130	116	53	36	1.57 (160)	157
UAC-26x132-BL	3272	UAC-26x132-BK	3276	146	132	55	38	1.08 (110)	178
UAC-26x164-BL	3273	UAC-26x164-BK	3277	178	164	57	40	0.78 (80)	209
UAC-26x196-BL	3274	UAC-26x196-BK	3278	210	196			0.49 (50)	242

UAF-BL UAF-BK Cabinet Handle

TOCHIGIYA GREEN PRODUCT



■Characteristic

It has the shape and size for easy gripping.
Excellent performances on reliability and stability.
Wide variety of choice, 100mm to 400mm.

■Application

Machine tools / Jigs and tools / Office utilities / Office automation appliances / Telecommunication devices on vehicles / Audio devices, etc.

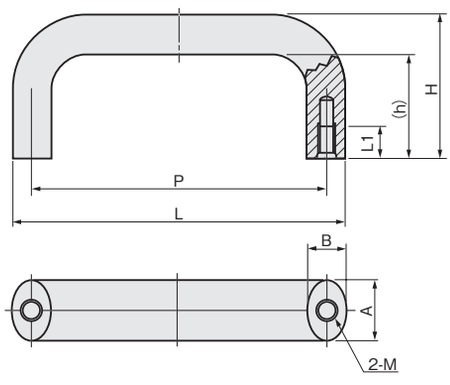

UAF-BL (Barrel Polishing)		UAF-BK (Painting)		Size Applied for Both									
Model No.	Code No.	Model No.	Code No.	L	P	H	h	A	B	M	L1	Allowable Vertical Load kN (kgf)	Net Weight (g)
UAF-20x100-BL	3279	UAF-20x100-BK	3289	113	100	47	34	20	13	M6	10	1.47 (150)	84
UAF-20x112-BL	3280	UAF-20x112-BK	3290	125	112	49	36						96
UAF-20x128-BL	3281	UAF-20x128-BK	3291	141	128	51	38					0.78 (80)	106
UAF-20x160-BL	3282	UAF-20x160-BK	3292	173	160							0.59 (60)	126
UAF-26x112-BL	3283	UAF-26x112-BK	3293	129	112	53	36	26	17	M8	12	2.94 (300)	157
UAF-26x128-BL	3284	UAF-26x128-BK	3294	145	128	55	38					1.57 (160)	178
UAF-26x160-BL	3285	UAF-26x160-BK	3295	177	160	57	40					0.78 (80)	209
UAF-26x192-BL	3286	UAF-26x192-BK	3296	209	192							0.59 (60)	242
UAF-26x300-BL	3287	UAF-26x300-BK	3297	317	300								345
UAF-26x400-BL	3288	UAF-26x400-BK	3298	417	400							——	440

■Specification

Model Type	Material	Finish
UAF-BL	Aluminum Alloy	Barrel Polishing
UAF-BK		Electrostatic Painting (Flat Black)