Middle Atlantic Products

EXCEPTIONAL SUPPORT & PROTECTION™

U Series/U317/UTR1 Rackshelves

GREENGUARD Children & Schools Indoor Air Quality Certified | EIA/TIA Compliant

U Series / U317 / UTR1 Rackshelves

Features

U Series - Universal rackshelves with solid and vented construction

- Available in 1 through 4 rackspaces
- Weight capacity from 35 to 85 lbs. depending on size
- Accommodates most standard non-rackmountable components
- See chart for part numbers and dimensions
- Contractor packs available

U317 - Vented 3 space rackshelf

- 17- 3/4" depth allows for deeper components
- 60 lb. weight capacity
- Vent pattern provides air circulation
- Slotted rear flange for cable management

UTR1 - Half / third rack shelf

- 25 lb. weight capacity
- Generous vent pattern provides superior air circulation
- Hook & loop strips included for mounting any half or third space components without hardware
- Contractor packs available



U4V



U2



U317

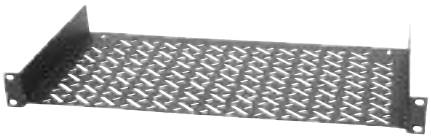

UTR1

Architects' and Engineers' Specifications

U Series

EIA/TIA compliant 19" solid, one-piece 16-gauge steel rackshelf shall be Middle Atlantic Products model # Ux (x = # of rackspaces, refer to chart). Weight capacity shall be__(refer to chart). Rackshelf shall feature durable flat black powder coat finish. Contractor packs shall be available with twelve U1 or six U2 rackshelves and shall be model # U1-RP12 or U2-RP6. U series rackshelf shall be UL Listed in the US and Canada. U Series shall be GREENGUARD Indoor Air Quality Certified for Children and Schools. U Series shall be RoHS EU Directive 2002/95/EC compliant. U series shall be manufactured by an ISO 9001 and ISO 14001 registered company. U series rackshelf shall be warrantied to be free from defects in material or workmanship under normal use and conditions for the lifetime of the product.

U Series, Vented

EIA/TIA compliant 19" solid, one-piece 16-gauge steel rackshelf shall be Middle Atlantic Products model # UxV (x=# of rackspaces, refer to chart) and shall have a ventilated bottom and sides. Weight capacity shall be__(refer to chart). Rackshelf shall feature durable flat black powder coat finish. Vented U series rackshelf shall be GREENGUARD Indoor Air Quality Certified for Children and Schools. Vented U series rackshelf shall be RoHS EU Directive 2002/95/EC compliant. Vented U series rackshelf shall be manufactured by an ISO 9001 and ISO 14001 registered company. Vented U series rackshelf shall be warrantied to be free from defects in material or workmanship under normal use and conditions for the lifetime of the product.

U317

EIA/TIA compliant 19" vented three rackspace rackshelf shall be Middle Atlantic Products model # U317. One-piece, 16-gauge rackshelf shall provide a 60 lb. weight capacity. U317 shall features slotted rear flange for cable management. Depth of 17-3/4" shall accommodate deeper components. U317 shall be GREENGUARD Indoor Air Quality Certified for Children and Schools. U317 shall be RoHS EU Directive 2002/95/EC compliant. U317 shall be manufactured by an ISO 9001 and ISO 14001 registered company. U317 shall be warrantied to be free from defects in material or workmanship under normal use and conditions for the lifetime of the product.

UTR1

EIA/TIA compliant 19" half / third rack shelf with 10" depth shall be Middle Atlantic Products model # UTR1. Weight capacity shall be 25 lbs. UTR1 shall include two 2" x 10" hook & loop strips for component mounting and a generous vent pattern for superior air circulation. Contractor packs shall be available with twelve UTR1 rackshelves and shall be model # UTR1-RP12. UTR1 shall be GREENGUARD Indoor Air Quality Certified for Children and Schools. UTR1 shall be RoHS EU Directive 2002/95/EC compliant. UTR1 shall be manufactured by an ISO 9001 and ISO 14001 registered company. UTR1 shall be warrantied to be free from defects in material or workmanship under normal use and conditions for the lifetime of the product.

US: New Jersey • California • Illinois • Voice: 973-839-1011 Fax: 973-839-1976 • middleatlantic.com
Canada: Ontario • British Columbia • Voice: 613-836-2501 Fax: 613-836-2690 • middleatlantic.ca

U Series/Vented U Series/U317/UTR1 basic dimensions

All dimensions in inches unless otherwise noted [Bracketed dimensions in millimeters]

U Series

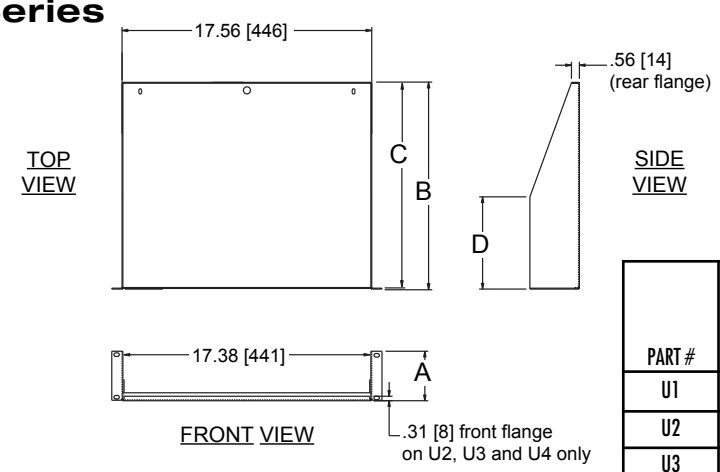

PART #	RACKING HEIGHT / RACKSPACES "A"	OVERALL DEPTH "B"	USEABLE DEPTH "C"	"D"	WEIGHT CAPACITY
U1	1.75 [44] (1 SP)	10.78 [274]	10.72 [272]	6.05 [154]	35 lbs. [16 kg]
U2	3.50 [89] (2 SP)	14.55 [370]	14.43 [367]	6.49 [165]	50 lbs. [23 kg]
U3	5.25 [133] (3 SP)	14.55 [370]	14.43 [367]	5.71 [145]	70 lbs. [32 kg]
U4	7.00 [178] (4 SP)	15.50 [394]	15.38 [391]	6.00 [152]	85 lbs. [39 kg]

Vented U Series

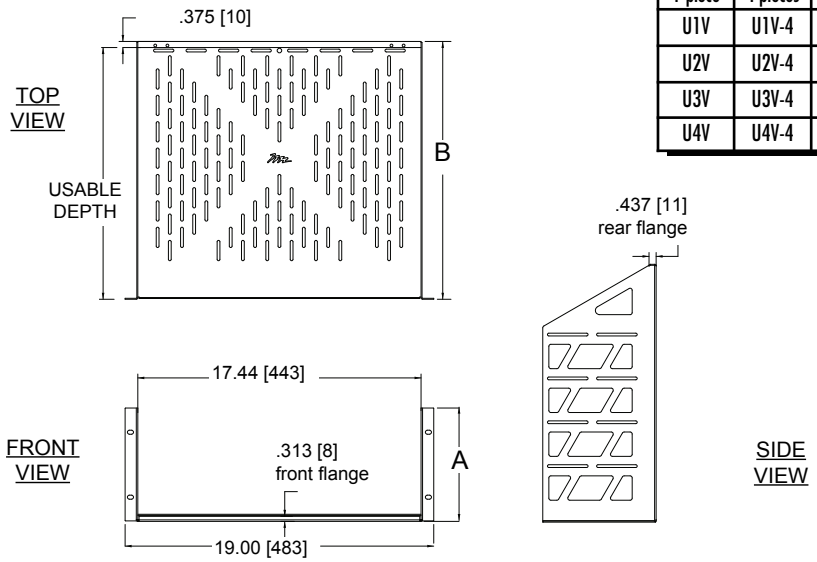

PART # 1 piece	PART # 4 pieces	RACKING HEIGHT/ RACKSPACES "A"	OVERALL DEPTH "B"	USEABLE DEPTH "C"	WEIGHT CAPACITY
U1V	U1V-4	1.75 [44] (1 SP)	10.78 [274]	10.41 [264]	35 lbs. [16 kg]
U2V	U2V-4	3.50 [89] (2 SP)	15.375 [390]	15.00 [381]	50 lbs. [23 kg]
U3V	U3V-4	5.25 [133] (3 SP)	15.375 [390]	15.00 [381]	70 lbs. [32 kg]
U4V	U4V-4	7.00 [178] (4 SP)	15.875 [403]	15.50 [394]	85 lbs. [39 kg]

U317

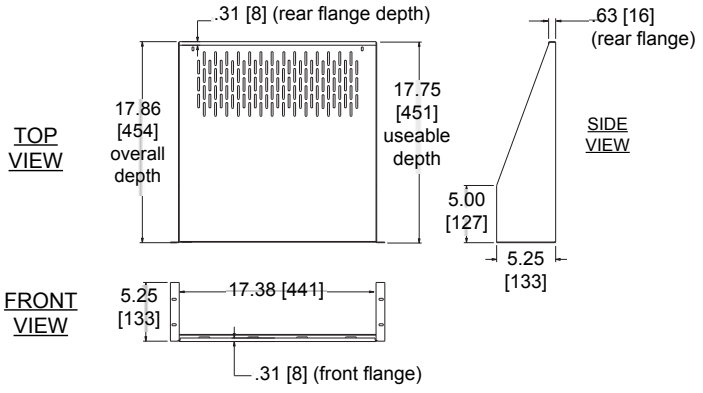

UTR1

