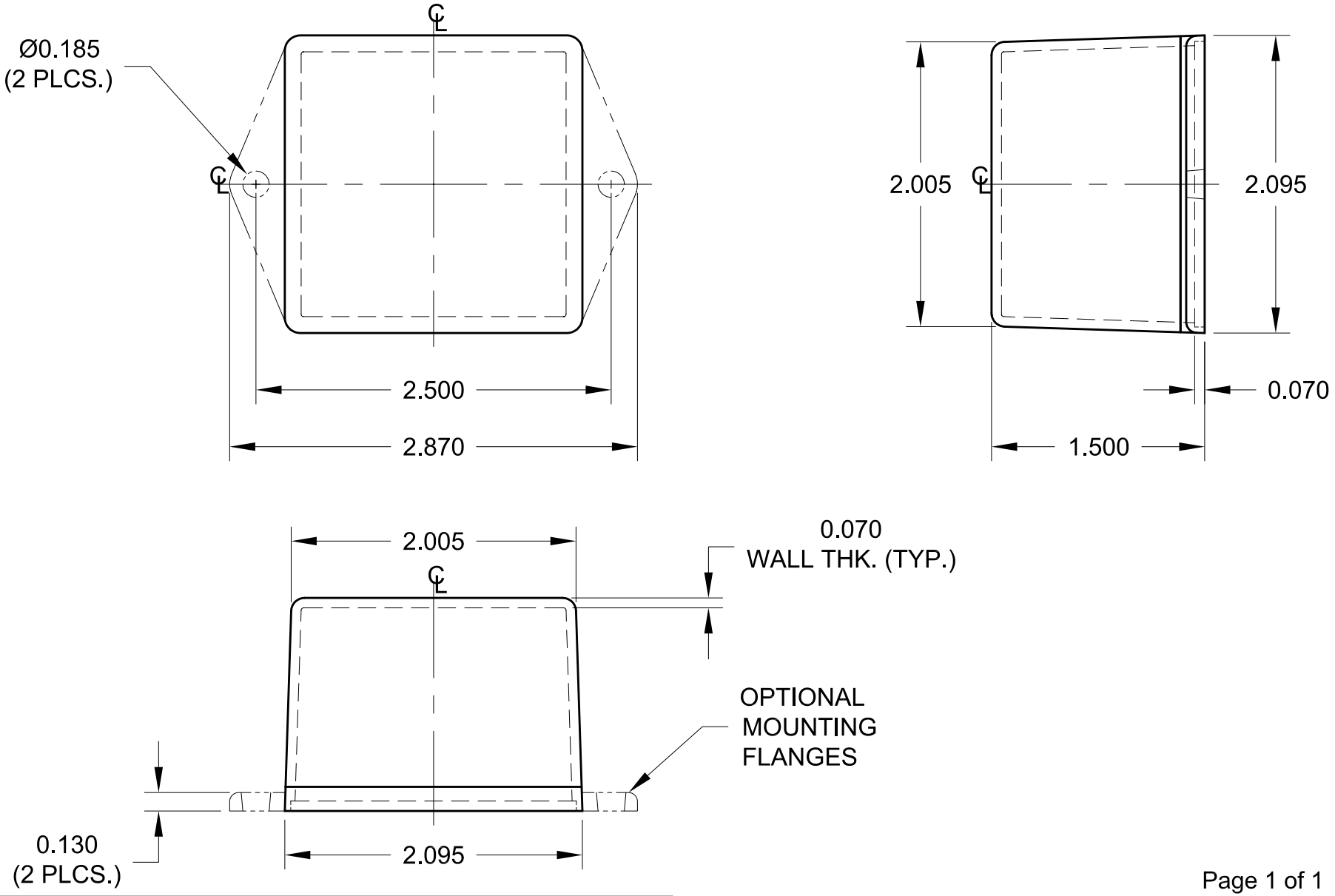

REV	DESCRIPTION	BY	CHK	DATE

POLYCASE™
YOUR PERFECT FIT

1305 CHESTER IND. PARKWAY AVON, OHIO 44011 U.S.A.
PH# 1-800-248-1233, 440-934-0444 FAX# 440-934-0088

TOLERANCES UNLESS OTHERWISE SPECIFIED
X.XX ±.020
X.XXX ±.010

THIS DRAWING AND THE INFORMATION CONTAINED ARE THE PROPERTY OF PLYCASE AND IT IS NOT TO BE REPRODUCED, COPIED OR USED IN ANY WAY DETRIMENTAL TO THE INTEREST OF POLYCASE.

DRWN BY	APP. BY	SCALE:	DATE:
M.M.T.	B.B.	FULL	07/10/00

JOB NO: - -

PRODUCT: 2215-TX -

CUSTOMER:

TITLE: PRODUCT DETAIL DRAWING

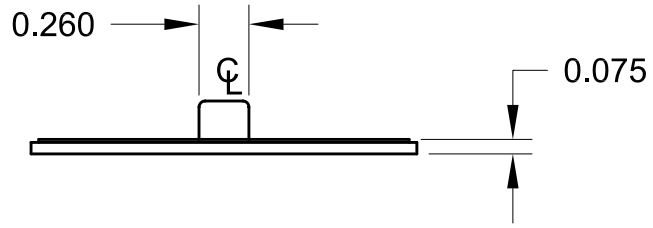

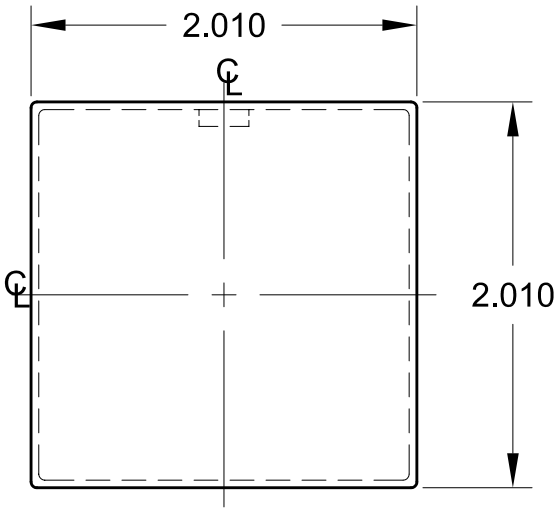

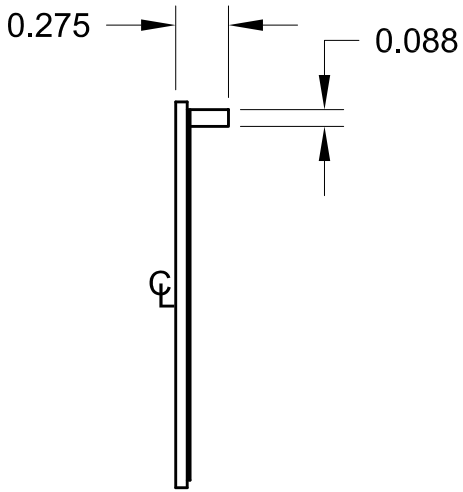

NOTE:
1.) COVER SOLD SEPARATELY.

REV	DESCRIPTION	BY	CHK	DATE

POLYCASE™
YOUR PERFECT FIT

1305 CHESTER IND. PARKWAY AVON, OHIO 44011 U.S.A.
PH# 1-800-248-1233, 440-934-0444 FAX# 440-934-0088

TOLERANCES UNLESS OTHERWISE SPECIFIED
X.XX ±.020
X.XXX ±.010

THIS DRAWING AND THE INFORMATION CONTAINED ARE THE PROPERTY OF PLYCASE AND IT IS NOT TO BE REPRODUCED, COPIED OR USED IN ANY WAY DETRIMENTAL TO THE INTEREST OF POLYCASE.

DRWN BY	APP. BY	SCALE:	DATE:
M.M.T.	B.B.	FULL	07/10/00

JOB NO: - -

PRODUCT: - C-0202-N

CUSTOMER:

TITLE: PRODUCT DETAIL DRAWING