Table of Contents

Fuse Holder Selection Chart	2
Surface Mount Fuses	3
Axial and Radial Leaded Fuses	8
5 x 15mm Fuses	12
5 x 20mm Fuses	18
6.3 x 32mm Fuses	36
Automotive Fuses	46
Miscellaneous Fuses	47
Fuse Clips for 5mm dia. Fuses	51
Fuse Clips for 6.3mm dia. Fuses	53
Fuse Clips Miscellaneous Sizes	55
Fuse Clips Automotive	56
Fuse Holders	57
Fuse Holders In-Line	63
Fuse Holders In-Line Automotive	64
Fuse Blocks	65
Fuse Technology and Glossary of Terms	67
Parts Index	68

Useful Telephone Numbers

UK Sales	**Phone:**	**01509 882606**
	Fax:	**01509 882788**
Export Sales	**Phone:**	**+44 1509 882700**
	Fax:	**+44 1509 882789**
Application Engineers	**Phone:**	**+44 (0)1509 882766**
		+44 (0)1509 882760
	Fax:	**+44 (0)1509 882786**
Catalogue Requests	**Phone:**	**+44 (0)1509 882715**
	Fax:	**+44 (0)1509 882794**
	e-mail:	**micht@bussmann.co.uk**
Sales on e-mail:	**sales@bussmann.co.uk**	
World Wide Web Site	**www.bussmann.com**	

Our World Wide Web site has information on all Bussmann products, together with catalogues and Data Sheets and useful application information.

Fuse Holder Selection Chart

Bussmann®

Fuse Type and Size	Panel Mount Holders Screwdriver Slot Carrier	Panel Mount Holders Fingergrip Screw or Bayonet Carrier	PC Board Holders enclosed	PC Board Holders open	Fuse Blocks	In-line Fuse Holders	Fuse Clips
5 x 20mm S500 to S508 GDA, GDB and GDC GMA, GMC and GMD C640 and C641	HTB3*M HTB5*M HTB9*M HTC35M HTC40M HTC55M HTC70M	HTB2*M Series HTB4*M Series HTB6*M Series	HBV-M HBW-M HBH-M	HTC15M HTC15MS	HTC10M		HTC200M HTC210M HTC220M 1A3399 1A5108 1A5601 1A5602
5 x 15mm C519 C520							HTC200M HTC210M HTC220M 1A3399 1A5108 1A5601 1A5602
6.3 x 32mm TDC10 TDA304 TDC455 ABC AGC MDQ GBB TDC11 TDC436 TDC459 MDL MDA	HTB3*I HTB5*I HTB9*I	HTB2*I HTB4*I HTB6*I HTB8*I HKP Series HKL HMR	HBV-I HBW-I HBH-I		S8000 Series 2499 4574 4405 4406	HFB HHB HFA	1A3398 1A4533 1A1907 1A4534 1A1119 1A1120 5681 5682
6.3 x 32mm GBA and GLD		HLD			S8000 Series 2499 4574 4405 4406		1A3398 1A4533 1A1907 1A4534 1A1119 1A1120 5681 5682
6.3 x 25.4mm AGX TDC180		HJL HJM HMS			4520 4393 3828	HHB HRK	1A3398 1A4533 1A1907 1A4534 1A1119 1A1120 5681 5682

1608FF

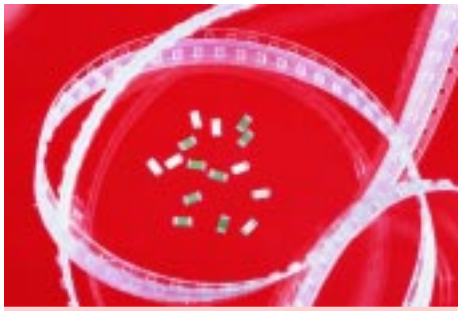

Agency Approvals:

General Description:

Bussmann SMT Chip Fuses utilise thick and thin metal film technologies for superior fusing action and enhanced reliability. The fuse element is bonded to a ceramic substrate and encapsulated with glass, providing excellent short circuit performance and environmental integrity. Predicted reliability of the 1608FF chip fuse is 30 times greater than that of the typical chip capacitor (consult Bussmann for details). Substrate and coating thermal expansion coefficients are closely matched to that of FR-4 epoxy glass circuit board for superior solder joint reliability. The end terminations are over-plated with nickel and tin base.

Order Code:	Packing Code + 1608FF + Rating
Type:	Very Fast Acting
Ratings (A):	250mA to 4A
Rated Voltage:	24V dc



Breaking Capacity: 35 A @ rated voltage

Time Current Characteristics:

100% rated current: 4 hours minimum carry.
250% rated current: open within 5 seconds.

Dimensions (mm):

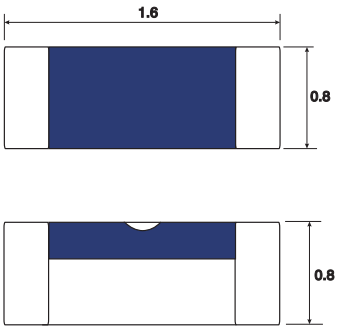

Packing Code Prefix: TR = 3,000 pieces on 8mm tape on a 178mm reel

TR1 = 15,000 pieces on 8mm tape on a 330mm reel

SP = 50 pieces on tape in a plastic box

Performance Data

Part Number xx = Packing Code	Current Rating (A)	Colour Code (Cover/Stripe)	Typ. Resistance @ ≤ 10% Rated Current (Ohms)	Typ. Voltage Drop @ Rated Current (Volts)	Typ. Pre-arcing I^2t @ 35A (A^2 sec)	Typ. Operating I^2t @ 35A (A^2 sec)
xx/1608FF-250mA	0.25	Green	3.0	0.90	.000067	.000082
xx/1608FF-375mA	0.375	Green/White	2.0	0.80	.00015	.00017
xx/1608FF-500mA	0.5	Blue	0.9	0.54	.00055	.00058
xx/1608FF-750mA	0.75	Blue/White	0.51	0.45	.00132	.00137
xx/1608FF-1A	1	Brown	0.15	0.18	.0022	.0026
xx/1608FF-1.5A	1.5	Brown/White	0.068	0.12	.014	.015
xx/1608FF-2A	2	Black	0.042	0.11	.037	.038
xx/1608FF-2.5A	2.5	Black/White	0.029	0.09	.070	.078
xx/1608FF-3A	3	Violet	0.022	0.087	.095	.107
xx/1608FF-3.5A	3.5	Violet/White	0.018	0.08	.185	.190
xx/1608FF-4A	4	Yellow	0.014	0.08	.270	.272

Notes:

1 AC interrupting rating, melting integral and total clearing integral measured at 32V, unity power factor.

2 DC interrupting rating, melting integral measured at 63V (250mA-3A) and 32V (4-5A) with battery source.

3 It is recommended that fuses be mounted with ceramic (white) side facing up.

4 Contact Bussmann if higher ampere ratings are needed.

5 For long term reliability, operating current of 80% or less of rated current is recommended, with further derating required at elevated ambient temperatures.

3216LV/3216CP/3216FF



Order Code:	Packing Code + 3216LV + Rating
Type:	Fast Acting
Ratings (A):	250mA to 1.5A
Rated Voltage:	125V ac/dc

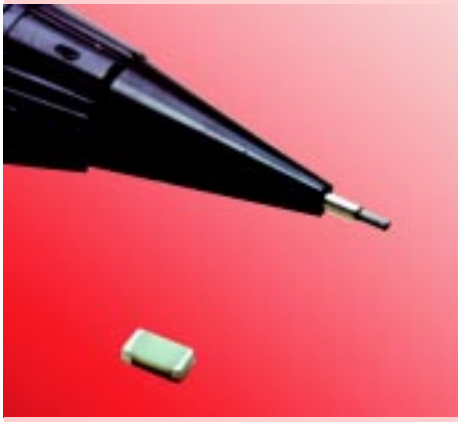

Order Code:	Packing Code + 3216CP + Rating
Type:	Fast Acting
Ratings :	250mA to 5A
Rated Voltage:	24V dc

Order Code:	Packing Code + 3216FF + Rating
Type:	Fast Acting
Ratings :	250mA to 6.5A
Rated Voltage:	32V ac / 63V dc (250mA - 3A); 32V dc (4 - 5A)

Agency Approvals:

General Description:

Bussmann SMT Chip Fuses utilise a combination of metal film and ultrasonic wire bond technologies for superior fusing action and enhanced reliability. The fuse element is bonded to the substrate and encapsulated with coloured glass, providing excellent short circuit performance and environmental integrity. The end terminations are over-plated with nickel and tin base.

Breaking Capacity: 3216FF & 3216LV - 50A @ rated voltage

3216CP - 35A @ rated voltage

Time-Current Characteristics:

3216FF & 3216CP - both will carry 100% of rated current for a minimum of 4 hours and will open within 5 seconds at 250% of rated current. The 4A to 5A fuses of the 3216FF will open within 1 second at 350% of rated current.

Dimensions (mm):

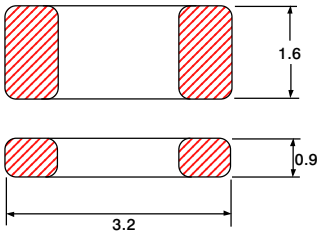

Packing Code Prefix: TR = 3,000 pieces on 8 mm tape on a 178mm reel.

TR1 = 15,000 pieces on 8mm tape on a 330mm reel.

SP = 50 pieces on tape in a plastic box.

Performance data for the 3216 range

3216FF

Part Number xx = Packing Code	Current Rating (A)	Part Marking	Typ. Resistance @ ≤ 10% Rated Current (Ohms)	Typ. Voltage Drop @ Rated Current (Volts)	Typ. Pre-arcing I^2t @ 50A (A^2 sec)		Typ. Operating I^2t @ 35A (A^2 sec.)	
					ac	dc	ac	dc
xx/3216FF-250mA	250mA	.25	4.5	1.4	.00016	.000084	.00017	.0001
xx/3216FF-375mA	375mA	White Dot	1.8	.73	.001	.0002	.0010	.0009
xx/3216FF-500mA	500mA	0.5	1.15	.66	.0014	.0019	.0016	.0026
xx/3216FF-750mA	750mA	.75	.75	.63	.0033	.00095	.0033	.0042
xx/3216FF-1A	1A	1	.168	.20	.012	.007	.014	.009
xx/3216FF-1.5A	1.5A	1.5	.098	.18	.047	.029	.048	.034
xx/3216FF-2A	2A	2	.063	.16	.116	.081	.136	.092
xx/3216FF-2.5A	2.5A	2.5	.046	.14	.208	.171	.210	.198
xx/3216FF-3A	3A	3	.037	.13	.426	.359	.507	.369
xx/3216FF-4A	4A	4	.019	.11	.187	.164	.208	.168
xx/3216FF-4.5A	4.5A	4.5	.014	.10	.546	.463	.550	.47
xx/3216FF-5A	5A	5	.013	.09	.663	.619	.668	.623
xx/3216FF-6.5A	6.5A	6.5	.0085	.076	2.18	3.21	2.21	3.23

3216LV

xx/3216LV-250mA	250mA	.25	4.50	1.4	.00016	.000084	.00017	.0001
xx/3216LV-375mA	375mA	White Dot	1.80	.73	.001	.0002	.0010	.0009
xx/3216LV-500mA	500mA	0.5	1.15	.66	.0014	.0019	.0016	.0026
xx/3216LV-750mA	750mA	.75	.75	.63	.0033	.00095	.0033	.0042
xx/3216LV-1A	1A	1	.52	.63	.020	.0084	.022	.0098
xx/3216LV-1.25A	1.25A	White Δ	.40	.62	.035	.021	.038	.027
xx/3216LV-1.5A	1.5A	1.5	.26	.49	.038	.024	.044	.033

3216CP

xx/3216CP-250mA	250mA		4.5	1.4				
xx/3216CP-375mA	375mA		1.8	.73				
xx/3216CP-500mA	500mA		1.15	.66				
xx/3216CP-750mA	750mA		.75	.63				
xx/3216CP-1A	1A		.168	.20				
xx/3216CP-1.5A	1.5A		.098	.18				
xx/3216CP-2A	2A		.063	.16				
xx/3216CP-2.5A	2.5A		.046	.14				
xx/3216CP-3A	3A		.037	.13				
xx/3216CP-4A	4A		.019	.11				
xx/3216CP-4.5A	4.5A		.014	.10				
xx/3216CP-5A	5A		.013	.09				

6125T



Order Code:	Packing Code + 6125T + Rating
Type:	Time Delay
Ratings :	250mA to 5A
Rated Voltage:	125V ac/dc

Agency Approvals:

Designed to comply with IEC127-4.

General Description:

Bussmann surge resistant time delay fuse with brazed sealed body and end plates, compatible with wave soldering. The fuse has excellent environmental integrity.

Breaking Capacity: 50A ac @ rated voltage, power factor = 1.0
50A dc @ rated voltage battery source

Time Current Characteristics:

125% of rating: 1 hour minimum carry.
200%: open within 2 minutes.
1000%: open within 0.01 to 0.1 seconds.

Dimensions (mm):

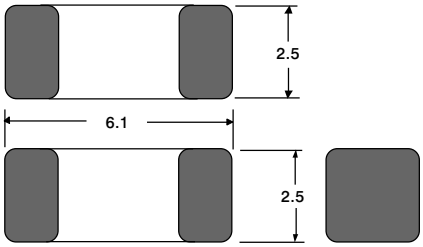

Packing Code Prefix: TR = 1,000 pieces on 12mm tape on a 178mm reel

SP = 50 pieces on 12mm tape in plastic box

Performance Data

Part Number xx = Packing code	Current Rating	Marking	Typ. Resistance @ ≤ 10% Rated Current (Ohms)	Max. Power Loss @ 125% of Rated Current (mW)
xx/6125T-250mA	250mA	B.25	4.5	500
xx/6125T-500mA	500mA	B0.5	1.0	500
xx/6125T-1A	1A	B1A	0.25	500
xx/6125T-1.5A	1.5A	B1.5	0.10	500
xx/6125T-2A	2A	B2A	0.06	500
xx/6125T-3A	3A	B3A	0.04	1000
xx/6125T-4A	4A	B4A	0.03	1200
xx/6125T-5A	5A	B5A	0.02	1200

SFT

Agency Approvals:



General Information:

The Bussmann SMD Tron is designed to EIA-PD-100, DWG SOPM-7243. A high temperature body material is capable of surviving a 60 second exposure to a temperature of 215 degrees centigrade in a flourinert FC-5311 environment. Because the SMD Tron is totally sealed, it can be subjected to cleaning by a wide variety of aggressive solvents.

Dimensions (mm):

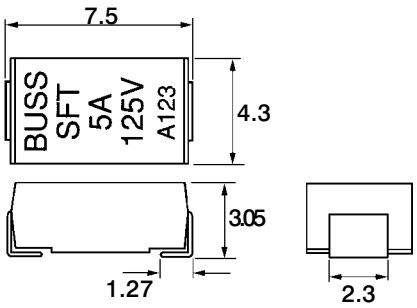

Order Code:	Packing Code + SFT + Rating
Type:	Fast Acting, Current Limiting
Construction:	Solid Matrix
Ratings:	63mA to 12.5A
Rated Voltage:	63mA to 5A -125V ac/dc 7A to 10A - 60V ac/ 90V dc
Weight:	1000 = 0.54kg

Packing Code Prefix: TR/SFT - 500 pcs on a 178mm reel, 16mm tape.
TR1/SFT - 2000 pcs on a 330.2mm reel, 16mm tape, (also available on a 12mm tape).

Time current characteristics: 63mA to 10A at 100% of rating - 4 hours minimum,
63mA to 10A at 250% of rated current - 5 seconds maximum.
12.5A - consult Bussmann.

Performance Data

Part Number xx = Packing code	Rated Current D	Rated Voltage (V)		Breaking Capacity A		Typ. Pre-arcing I^2t (A^2 sec)		Typical Operating C I^2t (A^2 sec)		Typical Voltage Drop B Volts at Rated Current	Agency Approvals	
		ac (max)	dc (max)	ac	dc	ac	dc	ac	dc			
xx/SFT-63mA	63mA	125	125	50A	300A	TBA	TBA	TBA	TBA		♦	♦
xx/SFT-125mA	125mA	125	125	50A	300A	TBA	TBA	TBA	TBA		♦	♦
xx/SFT-250mA	250mA	125	125	50A	300A	7.49×10^{-5}	5.1×10^{-6}	2.0×10^{-4}	6.29×10^{-6}	0.8	♦	♦
xx/SFT-375mA	375mA	125	125	50A	300A	3.17×10^{-4}	2.18×10^{-5}	4.18×10^{-4}	2.67×10^{-5}	0.75	♦	♦
xx/SFT-500mA	500mA	125	125	50A	300A	4.46×10^{-4}	3.8×10^{-5}	5.74×10^{-4}	4.63×10^{-5}	0.66	♦	♦
xx/SFT-750mA	750mA	125	125	50A	300A	1.72×10^{-3}	2.27×10^{-4}	2.59×10^{-3}	2.77×10^{-4}	0.525	♦	♦
xx/SFT-1A	1A	125	125	50A	300A	.01	.007	.011	.008	0.12	♦	♦
xx/SFT-1.5A	1.5A	125	125	50A	300A	.03	.020	.035	.025	0.2	♦	♦
xx/SFT-2A	2A	125	125	50A	300A	.08	.07	.089	.081	0.17	♦	♦
xx/SFT-2.5A	2.5A	125	125	50A	300A	.18	.14	.238	.16	0.145	♦	♦
xx/SFT-3A	3A	125	125	50A	300A	.34	.24	.44	.27	0.13	♦	♦
xx/SFT-3.5A	3.5A	125	125	50A	300A	.50	.38	.636	.47	0.155	♦	♦
xx/SFT-4A	4A	125	125	50A	300A	.89	.68	1.07	.78	0.135	♦	♦
xx/SFT-5A	5A	125	125	50A	300A	1.73	1.29	2.38	1.36	0.125	♦	♦
xx/SFT-7A	7A	60	90	50A	300A	TBA	TBA	TBA	TBA	0.114	♦	♦
xx/SFT-10A	10A	60	90	50A	300A	TBA	TBA	TBA	TBA	0.13	♦	♦
xx/SFT-12.5A	12.5A	48		50A		15	TBA	20	TBA	0.09	♦	

Notes:

A. Breaking Capacity was measured at 1.0 power factor on AC and a time constant less than 1ms on DC.

B. Voltage drop was measured at 25 deg. C ± 3 deg. C ambient temperature at rated current with device mounted on a circuit trace.

C. I^2t measured at 50 amp, 125V AC , .95PF, random closing angle; 300 amps, 125V DC, TC <1ms.

D. Device designed to carry 125% of rated current for one hour minimum. For long term reliability an operating current of 80% or less of rated current is recommended, with further derating at elevated ambient temperatures.

MCR



Order Code: Packing Code + MCR + Rating

Type: Fast Acting, Current Limiting

Ratings : 63mA to 10A

Rated Voltage: 0.0625 to 5A - 125V ac/dc
7 & 10A - 60V ac/90V dc

Agency Approvals:

Designed to UL248-14.

General Information:

The Microtron® subminiature fuse is designed to safely interrupt 50 amperes at 125V ac. This excellent performance is achieved at power factors as low as 97%. Competitive components claim similar short circuit interrupting ratings, but at 100% power factor - a condition that rarely exists in real world applications. In addition, the Microtron® is capable of interrupting a 300 ampere fault at 125V dc.

Dimensions (mm):

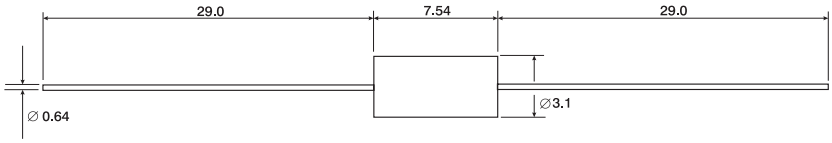

Packing Code Prefix:

Blank = 10's BK = 500's

TR/ = Tape/Reel 2,500 units, 52.4mm spacing
TR1/ = Tape/Reel 5,000 units, 52.4mm spacing
TR6/ = Tape/Reel 1,000 units, 52.4mm spacing

Radial leaded versions available 10.16mm & 15.24mm lead spacing.

Perfomance Data

Part Number xx = Packing Code	Rated Current	Breaking Capacity [1]		Pre-arcing I^2t (A^2 sec)[2]		Typical Operating [2] I^2t (A^2 sec)		Typical Voltage Drop Volts at 100% Rated Current	Agency Approvals		
		ac	dc	ac	dc	ac	dc				
xx/MCR-63mA	63mA	50A	300A	1.1×10^{-6}	1.0×10^{-7}	1.8×10^{-6}	1.5×10^{-7}	2.33	♦	♦	
xx/MCR-125mA	125mA	50A	300A	4.3×10^{-6}	7.1×10^{-7}	7.3×10^{-6}	8.7×10^{-7}	1.52	♦	♦	
xx/MCR-250mA	250mA	50A	300A	8.0×10^{-5}	1.0×10^{-6}	1.2×10^{-4}	1.3×10^{-6}	0.76	♦	♦	
xx/MCR-375mA	375mA	50A	300A	9.7×10^{-5}	6.7×10^{-6}	1.1×10^{-4}	8.3×10^{-6}	0.73	♦	♦	
xx/MCR-500mA	500mA	50A	300A	7.4×10^{-4}	5.4×10^{-5}	6.2×10^{-3}	6.8×10^{-5}	0.65	♦	♦	
xx/MCR-750mA	750mA	50A	300A	1.3×10^{-3}	7.4×10^{-5}	7.5×10^{-2}	9.2×10^{-5}	0.55	♦	♦	
xx/MCR-1A	1A	50A	300A	0.01	0.01	0.02	0.01	0.24	♦	♦	♦
xx/MCR-1.5A	1.5A	50A	300A	0.03	0.02	0.04	0.03	0.20	♦	♦	♦
xx/MCR-2A	2A	50A	300A	0.09	0.07	0.11	0.08	0.16	♦	♦	♦
xx/MCR-2.5A	2.5A	50A	300A	0.09	0.14	0.25	0.17	0.15	♦	♦	♦
xx/MCR-3A	3A	50A	300A	0.35	0.28	0.45	0.32	0.15	♦	♦	♦
xx/MCR-3.5A	3.5A	50A	300A	0.56	0.37	0.83	0.43	0.14	♦	♦	♦
xx/MCR-4A	4A	50A	300A	0.96	0.67	1.37	0.77	0.13	♦	♦	♦
xx/MCR-5A	5A	50A	300A	1.82	1.34	2.53	1.51	0.11	♦	♦	♦
xx/MCR-7A	7A	50A	300A	1.48	0.49	2.02	0.58	0.10	♦	♦	
xx/MCR-10A	10A	50A	300A	3.62	1.16	4.41	1.38	0.08	♦	♦	

Notes:

1 Breaking Capacity was measured at 100% (0.0625 to 7A) power factors on ac and a time constant less than 1ms on dc.

2 I^2t was measured at 50 amps 125V ac 0.95 PF (random closing angle) and 300 amps 125V dc, TC <1ms for 0.0625A to 5A and 50A 60V ac, 0.95PF (random closing angle) and 300 amps 90V dc, TC <1ms for the 7 and 10A fuses.

All values shown above are typical.

ETF and EFF Radial Lead Micro Fuse

Agency Approvals:

SEMKO and VDE approved except 5A and 6.3A which are not included in the standard. All are UL recognised and have CSA acceptance.

General Information:

ETF Time Delay radial leaded micro fuse in accordance with the specifications of IEC60127-3, standard sheet 4 (Type T).

EFF Fast Acting radial leaded micro fuse in accordance with the specifications of IEC60127-3, standard sheet 3 (Type F)



Order Code:	Packing Code + ETF + Rating
Type:	Time Delay
Ratings:	80mA to 6.3A
Rated Voltage:	250V ac

Order Code:	Packing Code + EFF + Rating
Type:	Fast Acting
Ratings:	250mA to 1.5A
Rated Voltage:	250V ac

Dimensions (mm):

	Short Lead	Long Lead
A	8.35 ± 0.1	8.35 ± 0.1
B	7.7 ± 0.1	7.7 ± 0.1
C	4.3 ± 0.3	-
D	-	18.8 ± 0.3
E	0.5 min	0.5 min
F	5.08 ± 0.1	5.08 ± 0.1
Lead ø	0.6 ± 0.1	0.6 ± 0.1

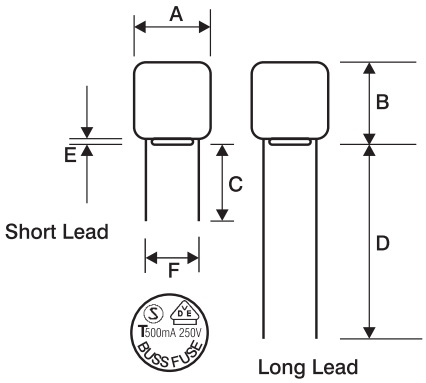

Breaking Capacity: 35A or 10 times rated current (whichever is the greater).

Markings: ETF marked as dimension drawing above, EFF marked with an 'F' in place of the letter 'T'.

Packing Codes: AP = Ammo packed 1000 per box; BK = in bulk 100 per bag (short leaded only). Weight is 573 grams per 1000 pieces.

ETF Operating Characteristics

Rated Current	$1.5I_n$	$2.1I_n$	$2.75I_n$		$4I_n$		$10I_n$	
	Min	Max	Min	Max	Min	Max	Min	Max
80mA to 6.3A	1 hr.	2 min	400ms	10 sec	150ms	3 sec	20ms	150ms

EFF Operating Characteristics

Rated Current	$1.5I_n$	$2.1I_n$	$2.75I_n$		$4I_n$		$10I_n$
	Min	Max	Min	Max	Min	Max	Max
250mA to 5A	1 hr.	30 min	10 ms	3 sec	3 ms	300ms	20 ms

ETF and EFF Radial Lead Micro Fuse

ETF Performance Data

Part Number xx = Packing Code	Rating	Cold Resistance Ohms ± 20%	Max. mV Drop measured at I_n normal ambient	Typ. Pre-arcing I^2t @10 I_n (A^2sec)	Part Number xx = Packing Code	Rating	Cold Resistance Ohms ± 20%	Max. mV Drop measured at I_n normal ambient	Typ. Pre-arcing I^2t @10 I_n (A^2sec)
xx/ETF80	80mA	3.3	400	0.01	xx/ETF800	800mA	0.12	120	4.2
xx/ETF100	100mA	2.2	350	0.02	xx/ETF1	1.0	0.09	110	6.7
xx/ETF125	125mA	1.5	300	0.04	xx/ETF1.25	1.25	0.06	100	11
xx/ETF160	160mA	1.0	280	0.06	xx/ETF1.6	1.6	0.047	95	17
xx/ETF200	200mA	0.7	250	0.11	xx/ETF2	2.0	0.035	90	27
xx/ETF250	250mA	0.5	220	0.41	xx/ETF2.5	2.5	0.026	87	43
xx/ETF315	315mA	0.38	190	0.66	xx/ETF3.15	3.15	0.019	83	69
xx/ETF400	400mA	0.28	160	1.05	xx/ETF4	4.0	0.014	80	110
xx/ETF500	500mA	0.21	150	1.66	xx/ETF5†	5.0	0.010	77	175
xx/ETF630	630mA	0.16	130	2.60	xx/ETF6.3†	6.3	0.008	73	281

† Contact Bussmann for availability

EFF Performance Data

Part Number xx = Packing Code	Rating	Cold Resistance Ohms ± 20%	Max mV Drop measured at I_n	Typ. Pre-arcing I^2t @10 I_n (A^2sec)	Part Number xx = Packing Code	Rating	Cold Resistance Ohms ± 20%	Max mV Drop measured at I_n	Typ. Pre-arcing I^2t @10 I_n (A^2sec)
xx/EFF250	250mA	0.45	260	0.29	xx/EFF1.25	1.25A	0.043	100	0.61
xx/EFF315	315mA	0.34	250	0.05	xx/EFF1.6	1.6A	0.034	95	1.1
xx/EFF400	400mA	0.25	240	0.08	xx/EFF2	2A	0.026	95	1.8
xx/EFF500	500mA	0.19	235	0.15	xx/EFF2.5	2.5A	0.020	90	3.1
xx/EFF630	630mA	0.091	110	0.12	xx/EFF3.15	3.15A	0.016	90	5.3
xx/EFF800	800mA	0.071	105	0.21	xx/EFF4	4A	0.012	85	9.0
xx/EFF1	1A	0.055	100	0.36	xx/EFF5	5A	0.010	85	16.0

Subminiature PC-TRON® Radial Lead Fuse

Agency Approvals:

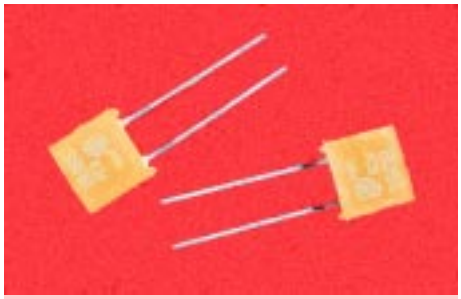

Order Code:	Packing Code + PC + Catalogue Symbol (see below) + Rating
Type:	Fast Acting
Ratings:	PCB, PCC, PCF & PCH - 500mA to 2.5A
	PCB, PCC, PCF & PCH - 2.6A to 3.0A
	PCD, PCE, PCG & PCI - 5.0A
Rated Voltage:	PCB, PCC, PCF & PCH - 250V ac, 450V dc
	PCB, PCC, PCF & PCH - 250V ac, 350V dc
	PCD, PCE, PCG & PCI - 125V ac, 250V dc

General Information:

At 250V ac, the 0.5 to 3A PC-TRON® can safely interrupt 50 amperes; at 125V ac, the 0.5 to 5A versions can interrupt 10,000 amperes. This high breaking capacity makes the PC-TRON® subminiature fuse ideal for line-side protection of power supplies.

Dimensions (mm):

Standard Fuse (PCB, PCD)

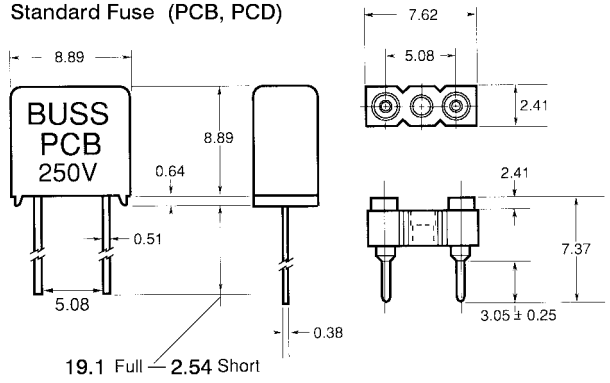

Surface Mount Fuse (PCH, PCI)

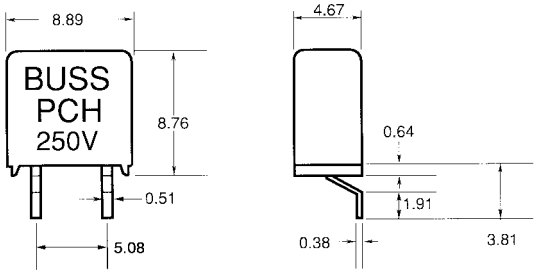

Fuse with 10.16 Lead Spacing (PCF, PCG)

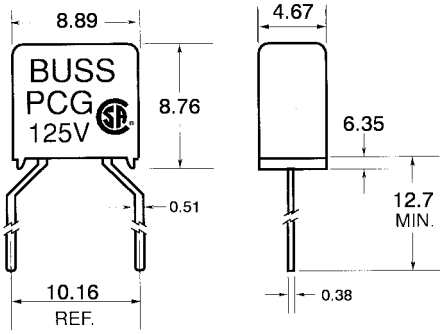

Catalogue Symbols:

PCB = Full lead length (250V) 0.5 to 3A

PCC = Short lead length* (250V) 0.5 to 3A

PCD = Full lead length (125V) 5A

PCE = Short lead length* (125V) 5A

PCF = 10.16mm lead spacing 0.5 to 3A

PCG = 10.16mm lead spacing 5A

PCH = 0.5 to 3A

PCI = 5A

* Short lead length not available in Tape & Reel

Packing Code Prefix:

Blank =	Standard pack of 5
BK =	Bulk Packed 100
TR =	Tape & Reel 500

Characteristics:

Carry 100% of rating for 4 hrs. minimum. Open at 200% of rating in 10 sec. maximum.

C515 (Axial Leads) and C519



Order Code: Packing Code + C519 + Rating

Type: Time Delay

Size: 5 x 15mm

Construction: Glass Tube, silver plated brass end caps.

Ratings: 125mA to 5A

Rated Voltage: 125mA to 3A - 250V ac
3.5A to 7A - 125V ac



Order Code: Packing Code + C515 + Rating

Specification as C519 but with 33.5mm Axial Leads

Ratings: 125mA to 7A

Agency Approvals:

General Information:

5 x 15mm glass fuse available with (C515) or without (C519) axial leads. The fuse is available with an optional sleeve of flexible fluoropolymer (UL flammability rating VW-1). The tube will self-extinguish within one minute.

Dimensional Data (mm):

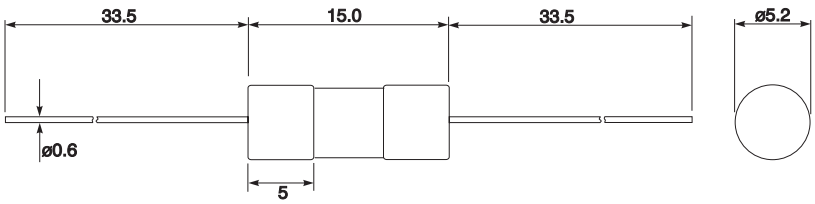

Packing Code Prefix:
BK - bulk package (100 pcs.); TR - Tape & Reel (500 pcs.)
TR1 - Tape & Reel (1000 pcs.); TR2 - Tape & Reel (1500 pcs.)

Tape & Reel packaging (C518 only) per EIA 296-E (10.2mm component pitch and 52.4mm tape-to-tape spacing). Only type C515 is available in tape and reel format.

Insert 'S' after the product reference if you want the sleeve. For example BK/C515S750.

Performance Data

Part Number xx = Packing Code	Rating	Breaking Capacity	Max mV @ I_n	Max. power Loss (W) @ I_n	Min I^2t @ $10I_n$ (A^2s)	UL		
xx/C519-125mA	125mA	35A/250V 10kA/125V ac p.f. = 0.7 - 0.8	1300	0.16	0.084	♦		♦
xx/C519-250mA	250mA		670	0.17	0.26	♦		♦
xx/C519-350mA	350mA	35A/250V 10kA/125V ac 25A/600V only p.f. =1.0	550	0.19	1.2	♦	♦	♦
xx/C519-375mA	375mA	35A/250V ac 10kA/125V ac p.f. = 0.7 - 0.8	510	0.19	1.3	♦		♦
xx/C519-500mA	500mA		430	0.22	1.6	♦		♦
xx/C519-600mA	600mA		320	0.19	2.5	♦		♦
xx/C519-750mA	750mA		310	0.23	2.5	♦		♦
xx/C519-1A	1A		250	0.25	6.5	♦		♦
xx/C519/1.25A	1.25A	100A/250V ac 10kA/125V ac p.f. = 0.7 - 0.8	250	0.31	10.0	♦		♦
xx/C519-1.5A	1.5A		230	0.35	12.0	♦		♦
xx/C519-1.6A	1.6A		220	0.35	15.0	♦		♦
xx/C519-2A	2A		180	0.36	27.0	♦		♦
xx/C519-2.25A	2.25A		210	0.47	30.0	♦		♦
xx/C519-2.5A	2.5A		190	0.48	47.0	♦		♦
xx/C519-3A	3A		170	0.51	51.0	♦		♦
xx/C519-3.5A	3.5A	400A/125V ac p.f. = 1.0	170	0.60	64.0		♦	
xx/C519-4A	4A		160	0.64	123.0		♦	
xx/C519-5A	5A		150	0.75	175.0		♦	
xx/C515-7A	7A*		130	0.91	426.0		♦	

* C515 only.

Time Current Characteristics

C515 and C519 Range: 125mA to 750mA

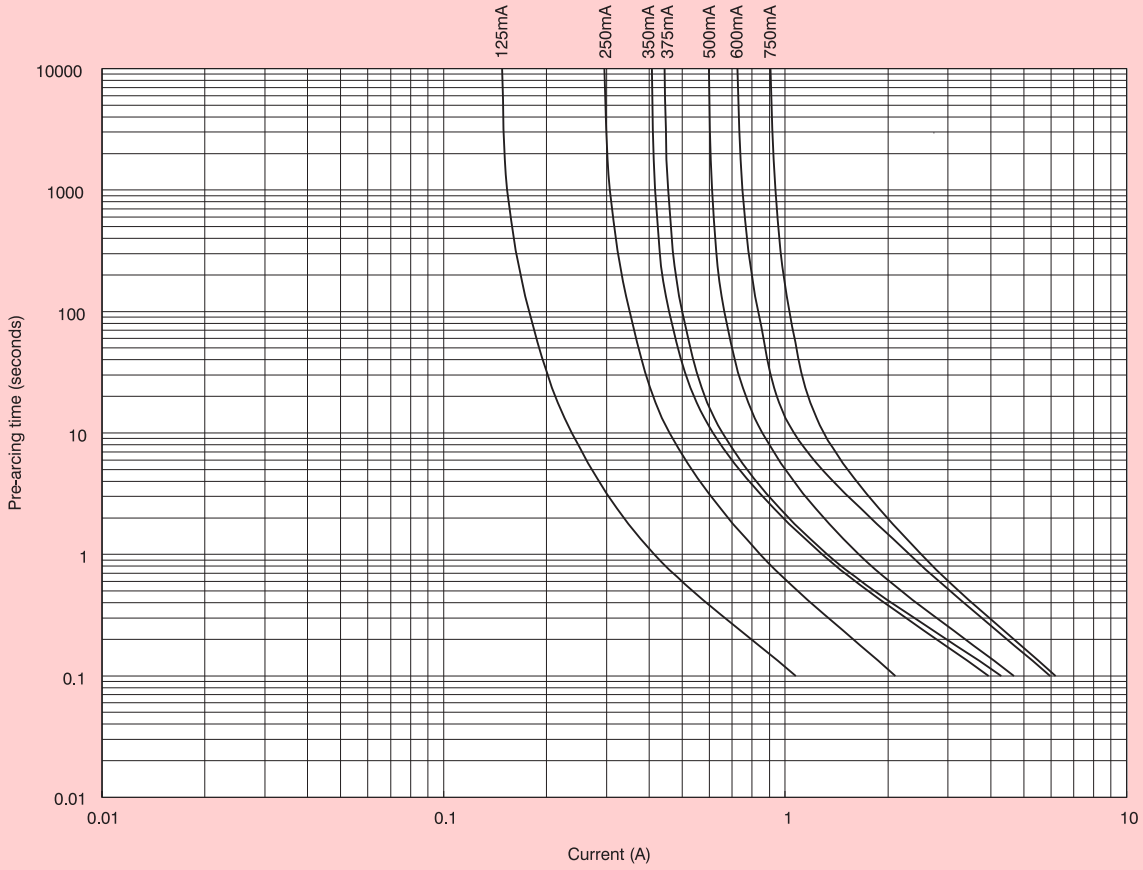

C515 and C519 Range: 1A to 7A

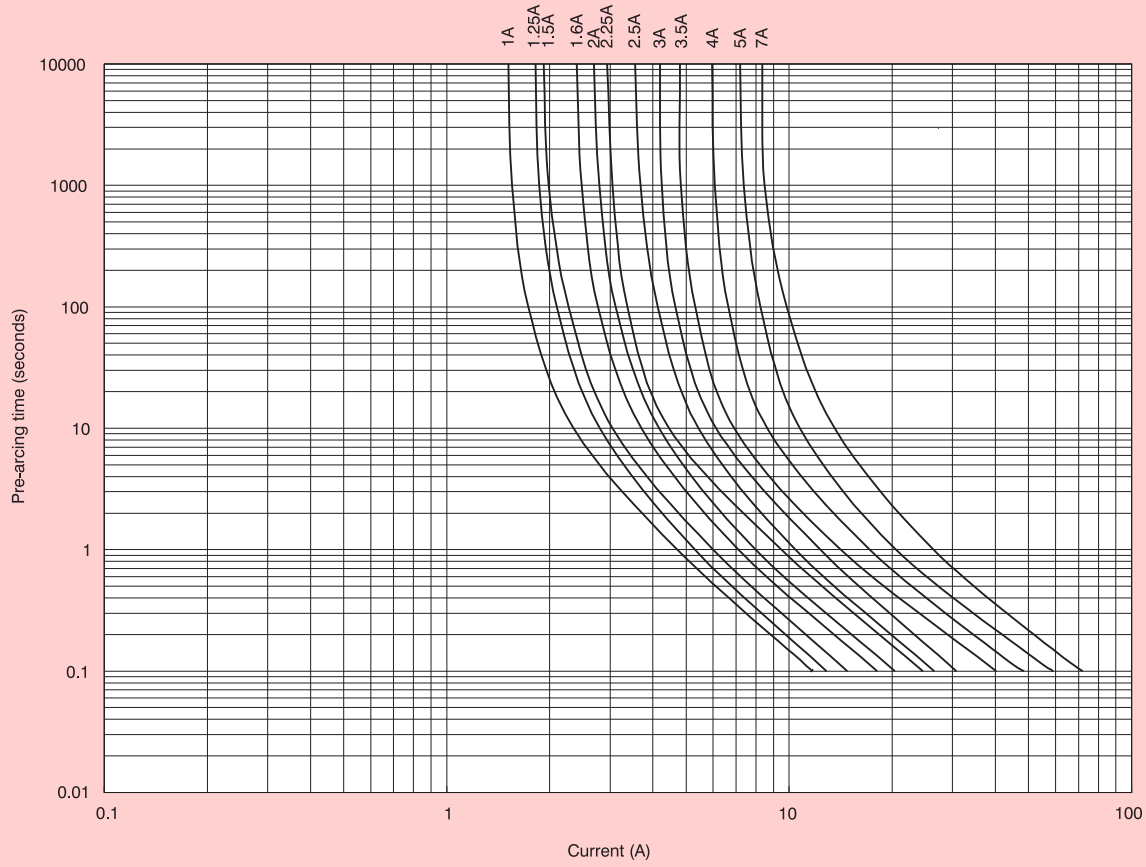

C518 (Axial Leaded) and C520



Order Code: Packing Code + C520 + Rating

Type: Fast Acting

Size: 5 x 15mm

Construction: Glass tube, electro-plated brass end caps.

Ratings: 100mA to 5A

Rated Voltage: 250V ac



Order Code: Packing Code + C518 + Rating

Specification as C519 but with 33.5mm Axial Leads

Agency Approvals:

General Information:

5 x 15mm glass fuse available with (C518) and without (C520) axial leads. The fuse is available with an optional sleeve of flexible fluor-opolymer (UL flammability rating VW-1). The tube will self extinguish within one minute.

Dimensional Data (mm):

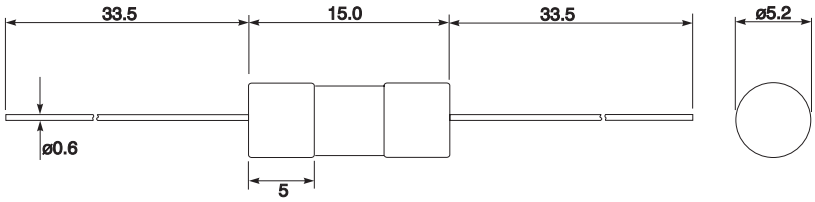

Packing Code Prefix:

BK - bulk package (100 pcs.); TR - Tape & Reel (500 pcs.); TR1 - Tape & Reel (1000 pcs.); TR2 - Tape & Reel (1500 pcs.)

Tape and Reel packaging (for C518 only) per EIA 296-E (10.2mm component pitch and 52.4mm tape-to-tape spacing). Only the C518 is available in tape and reel format.

Insert 'S' after the product reference if you want the sleeve. For example BK/C518S250.

Performance Data

Part Number xx = Packing Code	Rating	Breaking Capacity	Max. mV @ I_n	Max. Power Loss (W) @ I_n	Max. I^2t @ $10I_n$ (A^2s)	UL	SA
xx/C518-100mA	100mA	35A/250V ac 10kA/125V ac p.f. = 0.7 - 0.8	3100	0.31	0.0010	♦	♦
xx/C518-125mA	125mA		2800	0.35	0.0022	♦	♦
xx/C518-250mA	250mA		2200	0.55	0.016	♦	♦
xx/C518-375mA	375mA		1500	0.56	0.053	♦	♦
xx/C518-500mA	500mA		1300	0.65	0.13	♦	♦
xx/C518-750mA	750mA		1000	0.75	0.37	♦	♦
xx/C518-2A	2A	100A/250V ac 10kA/125V ac p.f. = 0.7 - 0.8	190	0.38	2.3	♦	♦
xx/C518-2.5A	2.5A		180	0.45	4.1	♦	♦
xx/C518-3A	3A		160	0.48	6.8	♦	♦
xx/C518-3.5A	3.5A		140	0.49	11.0	♦	♦
xx/C518-4A	4A	200A/250V 10kA/125V ac p.f. = 0.7 - 0.8	TBA	TBA	TBA	♦	♦
xx/C518-5A	5A		130	0.65	13.0	♦	♦

Time current characteristics

C518 and C520 Range: 100mA to 750mA

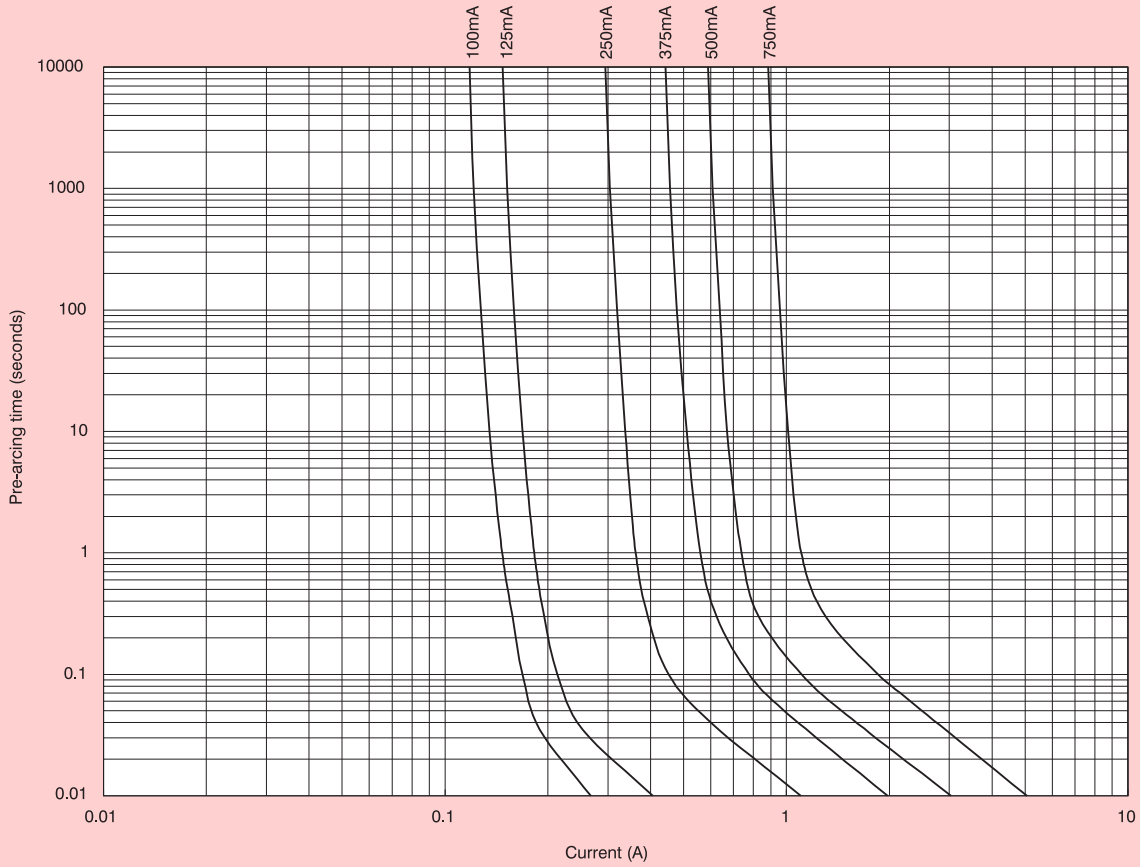

C518 and C520 Range: 2A to 5A

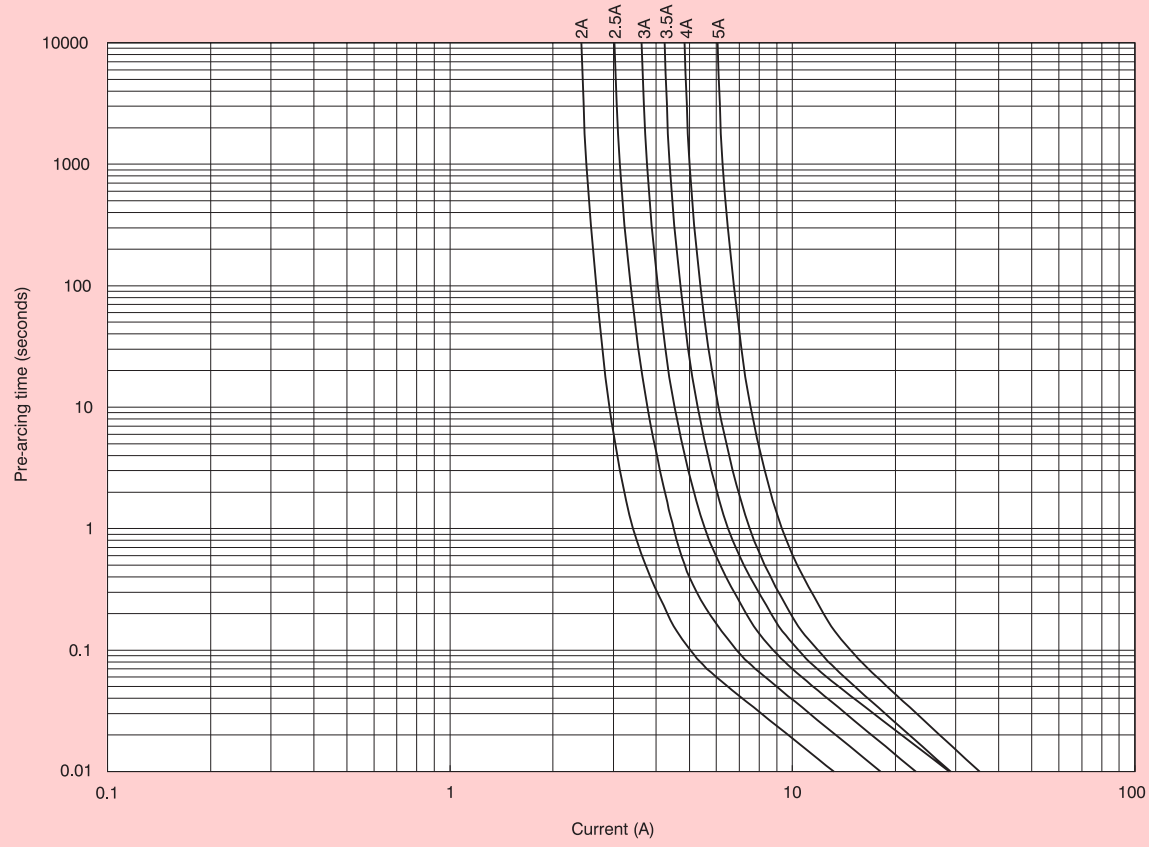

C517 (Axial Leads)



Order Code:	Packing Code + C517 + Rating
Type:	Fast Acting, lighting ballast protection.
Size:	5 x 15mm
Construction:	Ceramic tube, electro plated brass end caps.
Ratings:	2A to 5A
Rated Voltage:	350V ac

Agency Approvals:

General Information:

5 x 15mm glass fuse only available with axial leads, used as lighting ballast protection. An optional sleeve of flexible fluoropolymer (UL flammability rating VW-1) is available. The tube will self extinguish within one minute.

Dimensional Data (mm):

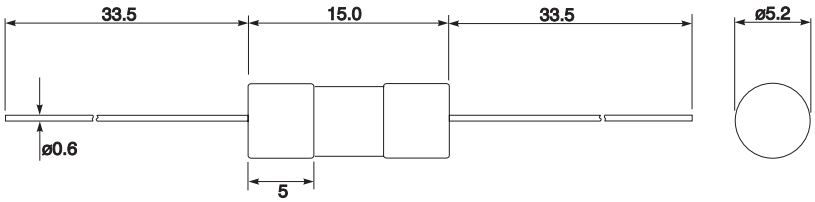

Packing Code Prefix:

BK - bulk package (100 pcs.); TR - Tape & Reel (500 pcs.);
TR1 - Tape & Reel (1000 pcs.); TR2 - Tape & Reel (1500 pcs.)

Tape and reel packaging per EIA296-E (10.2mm component pitch and 52.4mm tape-to-tape spacing.

Insert 'S' after the product reference if you want the sleeve.
For example BK/C517S3.

Performance Data

Rating	Breaking Capacity at 125V	Breaking Capacity at 250V	Breaking Capacity at 350V	Max. mV @ I_n	Max. Power Loss (W) @ I_n	Min. I^2t @ $10I_n$ (A^2s)				
2A	10kA p.f. = 0.7 - 0.8	100A p.f. = 0.7 - 0.8	100A p.f. = 1.0	190	0.38	1.2	◆	◆	◆	
3A				160	0.48	4.05	◆	◆	◆	◆
5A		200A p.f. = 0.7 - 0.8		130	0.65	8.0	◆	◆	◆	

Time current characteristics

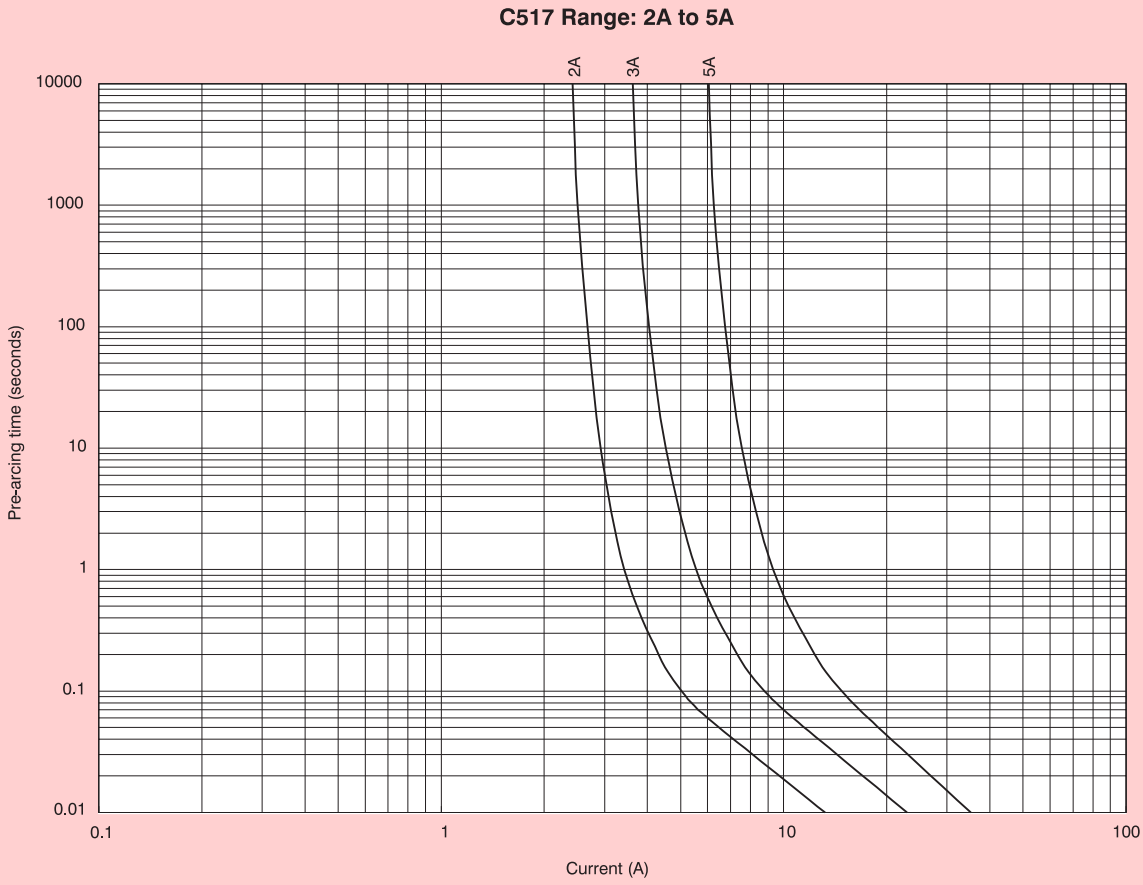

S501 (GDA and GDA-V Axial Leads)



Order Code: S501 + Rating
GDA + Rating (USA)
GDA-V + Rating

Type: Fast Acting, High Breaking Capacity.

Size: 5 x 20mm

Construction: Ceramic Tube, electro-plated end caps.

Ratings: 50mA to 10A

Rated Voltage: 250V ac

Packing: 10's, 100's, 1000's

Weight: 1000 = 1 kg

Agency Approvals:

Designed to IEC 60127-2-1

Dimensions (mm):

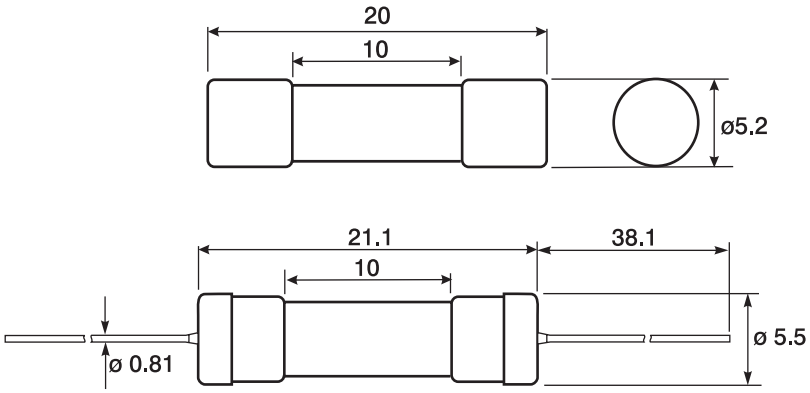

Breaking Capacity: 1500A 250V, 50Hz pf ≈ 0.7 - 0.8

Performance Data

Rating	Max mV @I_n	Max. Power Loss (W) @ 1.5 I_n	Min. Pre-arcing I^2t @ 10I_n (A^2s)	VDE			
50mA	10000	1.2	0.000250		♦		♦
63mA	3200	0.57	0.000635				
80mA	3000	0.65	0.00146				
100mA	2600	0.65	0.00290				
125mA	2000	0.65	0.00391				
160mA	1700	0.67	0.00717		♦		
200mA	1600	0.72	0.0108				
250mA	1500	0.84	0.0356				
315mA	1500	1.2	0.0149		♦		♦
400mA	1300	1.3	0.0240		♦		♦
500mA	360	0.53	0.238		♦	♦	
630mA	340	0.67	0.456		♦		
800mA	300	0.73	0.832		♦		
1.0A	240	0.86	0.330		♦		♦
1.25A	230	1.0	0.906	♦	♦		♦
1.6A	190	1.0	1.280	♦	♦		♦
2.0A	220	1.6	1.6	♦	♦	♦	♦
2.5A	200	1.7	3.0	♦	♦	♦	♦
3.15A	170	1.8	5.56	♦	♦	♦	♦
4.0A	160	2.0	11.04	♦	♦	♦	♦
5.0A	140	2.6	20.5	♦	♦	♦	♦
6.3A	130	2.7	36.9	♦	♦	♦	♦
8.0A	130	-	64.0				
10.0A	130	-	100.0				

Time current characteristics

S501, GDA and GDA-V Range: 50mA to 250mA

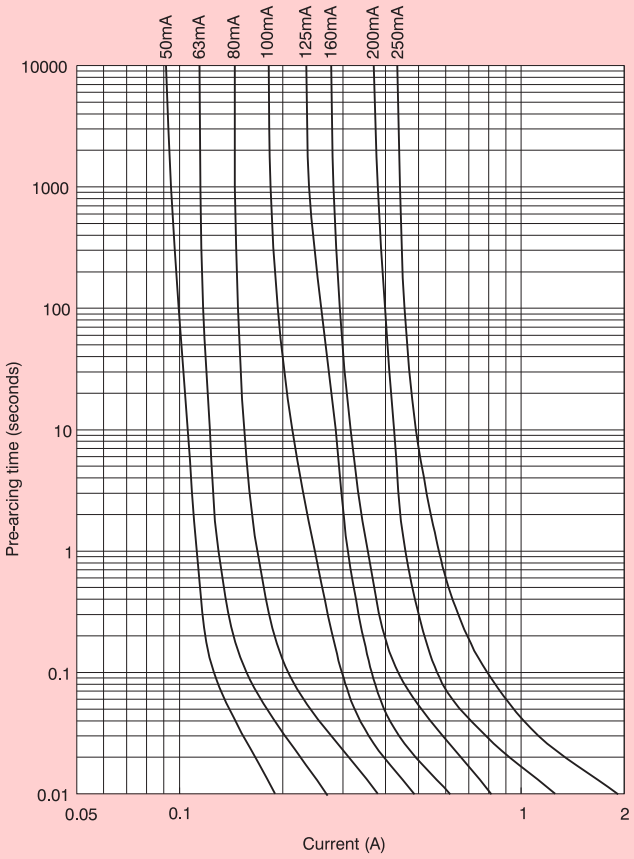

S501, GDA and GDA-V Range: 315mA to 800mA

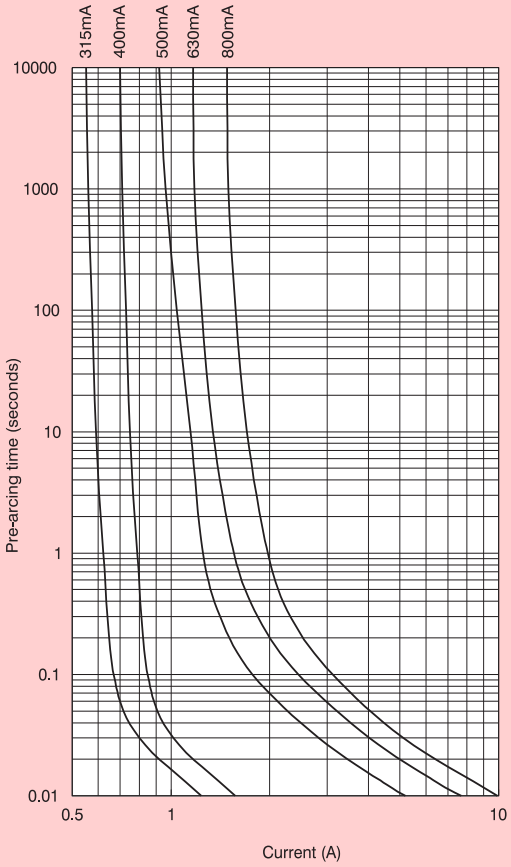

S501, GDA and GDA-V Range: 1A to 10A

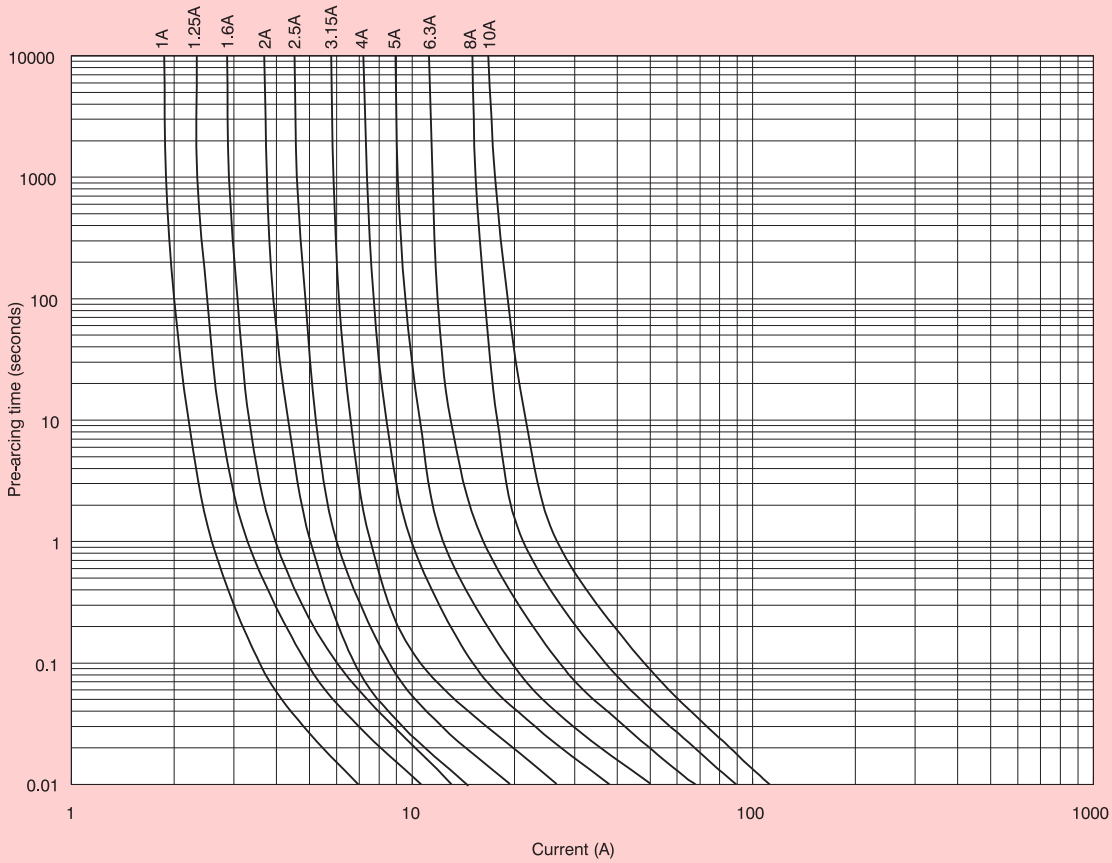

S500 (GDB and GDB-V Axial Leads)



Order Code:	S500 + Rating GDB + Rating (USA) GDB-V + Rating
Type:	Fast Acting, Low Breaking Capacity.
Size:	5 x 20mm
Construction:	Glass Tube, electro-plated end caps.
Ratings:	32mA to 10A
Rated Voltage:	250V ac
Packing:	10's, 100's, 1000's
Weight:	1000 = 0.62 kg

Agency Approvals:

Designed to IEC60127-2-2

Dimensions (mm):

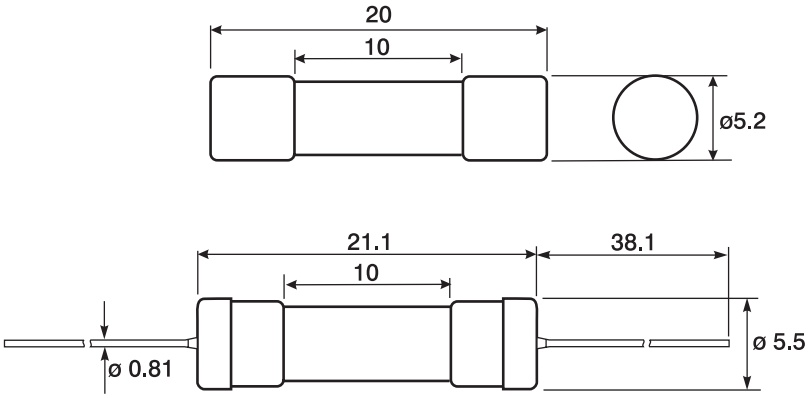

Breaking Capacity:

32mA to 3.15A - 35A @ 250V, 50Hz pf ≈ 1.0
4A to 10A - 10 x In 250V, 50Hz pf ≈ 1.0

Performance Data

Rating	Max mV @I_n	Max. Power Loss (W) @ 1.5 I_n	Min. Pre-arcing I^2t @ 10I_n (A^2s)					
32mA	3200	0.21	0.0000307			♦		
40mA	2500	0.21	0.000058			♦		
50mA	2400	0.25	0.000100			♦		
63mA	2000	0.26	0.000167			♦		
80mA	1200	0.27	0.000448			♦		
100mA	1100	0.30	0.00110			♦		
125mA	1000	0.35	0.00266			♦		
160mA	2000	0.79	0.00614	♦	♦	♦	♦	♦
200mA	1700	0.82	0.00640	♦	♦	♦	♦	♦
250mA	1400	0.82	0.0250	♦	♦	♦	♦	♦
315mA	1300	1.0	0.0367	♦	♦	♦	♦	♦
400mA	1100	1.0	0.0880	♦	♦	♦	♦	♦
500mA	220	0.31	0.0120	♦	♦		♦	♦
630mA	220	0.44	0.0159	♦	♦		♦	♦
800mA	190	0.46	0.0256	♦	♦	♦	♦	♦
1.0A	200	0.73	0.450	♦	♦	♦	♦	♦
1.25A	200	1.0	0.656	♦	♦	♦	♦	♦
1.6A	190	1.2	1.19	♦	♦	♦	♦	♦
2.0A	150	1.2	3.32	♦	♦	♦	♦	♦
2.5A	150	1.3	5.31	♦	♦	♦	♦	♦
3.15A	130	1.7	9.92	♦	♦	♦	♦	♦
4.0A	130	1.7	20.0	♦	♦	♦	♦	♦
5.0A	120	1.9	32.5	♦	♦	♦	♦	♦
6.3A	120	2.4	59.5	♦	♦	♦	♦	♦
8.0A	120	-	134.4					
10.0A	110	-	230.0					

Time current characteristics

S500, GDB and GDB-V Range: 32mA to 800mA

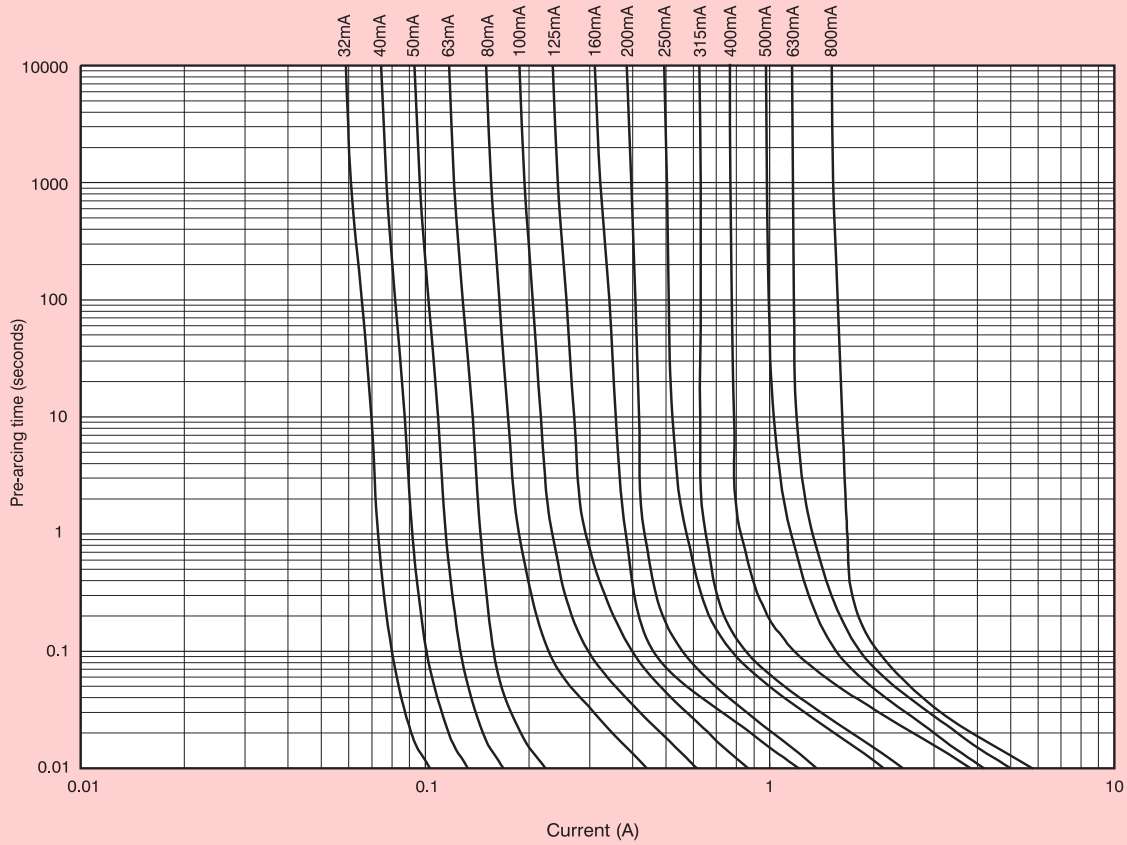

S500, GDB and GDB-V Range: 1A to 10A

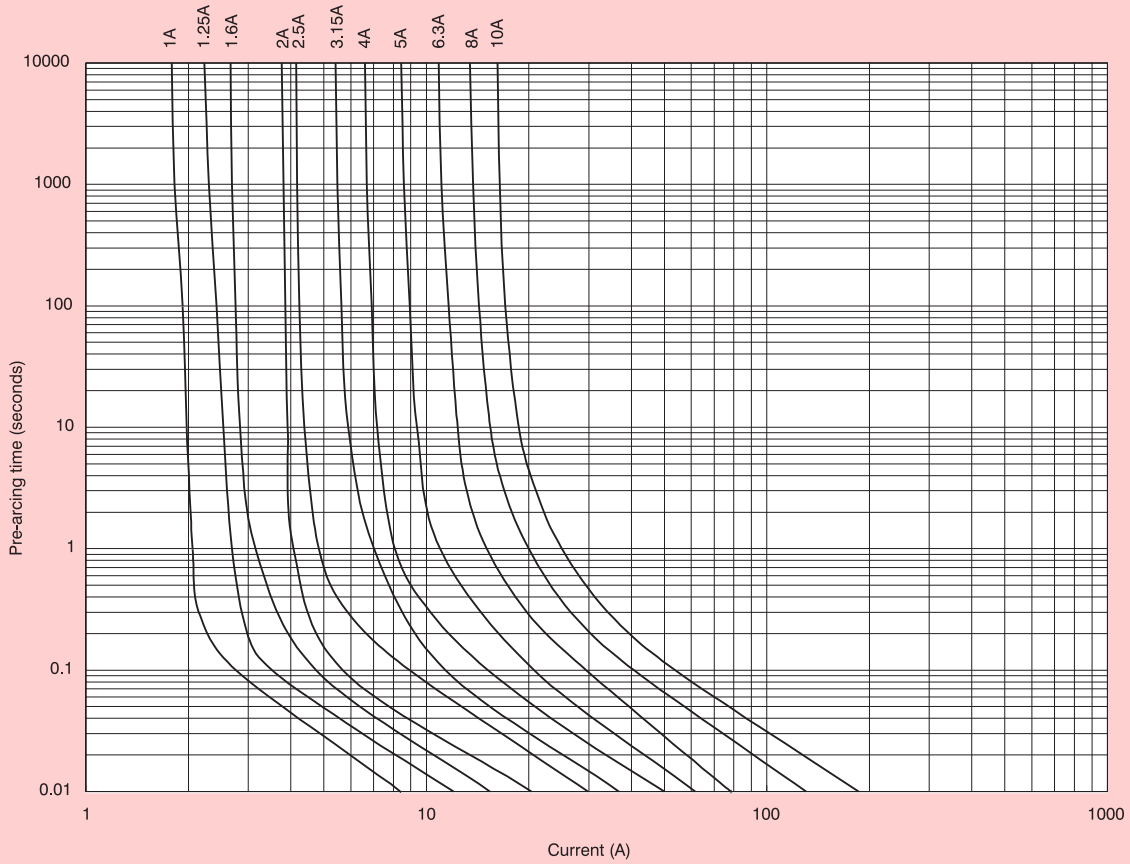

S504 and S504-V (Axial Leads) GDC and GDC-V (Axial Leads)



Agency Approvals:

Designed to IEC60127-2-3

Dimensions (mm):

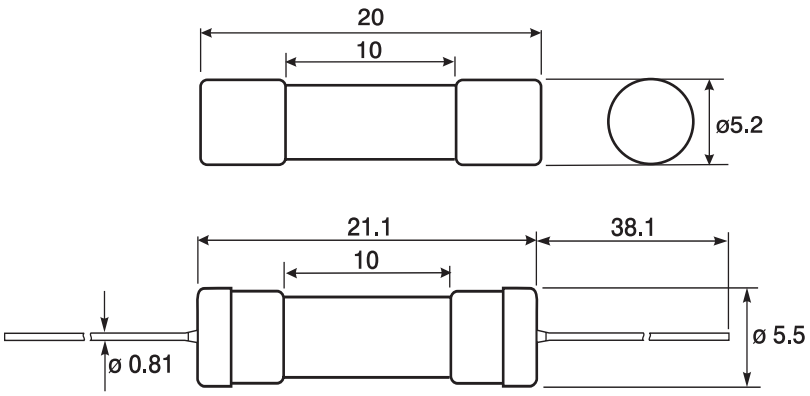

Order Code:	S504 + Rating S504-V + Rating GDC + Rating (USA) GDC-V + Rating (USA)
Type:	Time-delay, Low Breaking Capacity.
Size:	5 x 20mm
Construction:	Glass tube, electro-plated brass end caps.
Ratings:	32mA to 6.3A (S504) 32mA to 400mA (GDC)
Rated Voltage:	250V ac
Packing:	10's, 100's, 1000's
Weight:	1000 = 0.785kgs

Breaking Capacity:

32mA to 3.15A - 35A @ 250V ac 50Hz pf ≈ 1.0
4A to 6.3A - 250V ac, 50Hz pf ≈ 1.0

Performance Data

Rating	Max mV @I_n	Max. Power Loss (W) @ 1.5 I_n	Min. Pre-arcing I^2t @ 10I_n (A^2s)						
32mA	1100	0.14	0.0038	♦	♦	♦	♦	♦	
40mA	960	0.17	0.0054	♦	♦	♦	♦	♦	
50mA	860	0.17	0.0072	♦	♦	♦	♦	♦	
63mA	800	0.17	0.017	♦	♦	♦	♦	♦	
80mA	610	0.18	0.030	♦	♦	♦	♦	♦	
100mA	520	0.18	0.035	♦	♦	♦	♦	♦	
125mA	420	0.18	0.050	♦	♦	♦	♦	♦	
160mA	340	0.21	0.076	♦	♦	♦	♦	♦	
200mA	360	0.33	0.10	♦	♦	♦	♦	♦	
250mA	290	0.33	0.20	♦	♦	♦	♦	♦	
315mA	270	0.33	0.53	♦	♦	♦	♦	♦	
400mA	230	0.33	0.80	♦	♦	♦	♦	♦	
500mA	200	0.36	1.2	♦	♦	♦	♦	♦	
630mA	180	0.36	1.7	♦	♦	♦	♦	♦	
800mA	180	0.55	3.7	♦	♦	♦	♦	♦	
1.0A	140	0.55	4.7	♦	♦	♦	♦	♦	♦
1.25A	120	0.55	6.8	♦	♦	♦	♦	♦	♦
1.6A	120	0.59	15	♦	♦	♦	♦	♦	♦
2.0A	115	0.74	24	♦	♦	♦	♦	♦	♦
2.5A	110	0.84	37	♦	♦	♦	♦	♦	♦
3.15A	100	0.93	65	♦	♦	♦	♦	♦	♦
4.0A	95	1.1	62	♦	♦	♦	♦		♦
5.0A	95	1.5	140	♦	♦	♦	♦		♦
6.3A	95	1.6	215	♦		♦	♦		♦

N.B. GDC and GDC-V only available from 32mA to 400mA inclusive.

Time current characteristics

S504, GDC and GDC-V Range: 32mA to 500mA

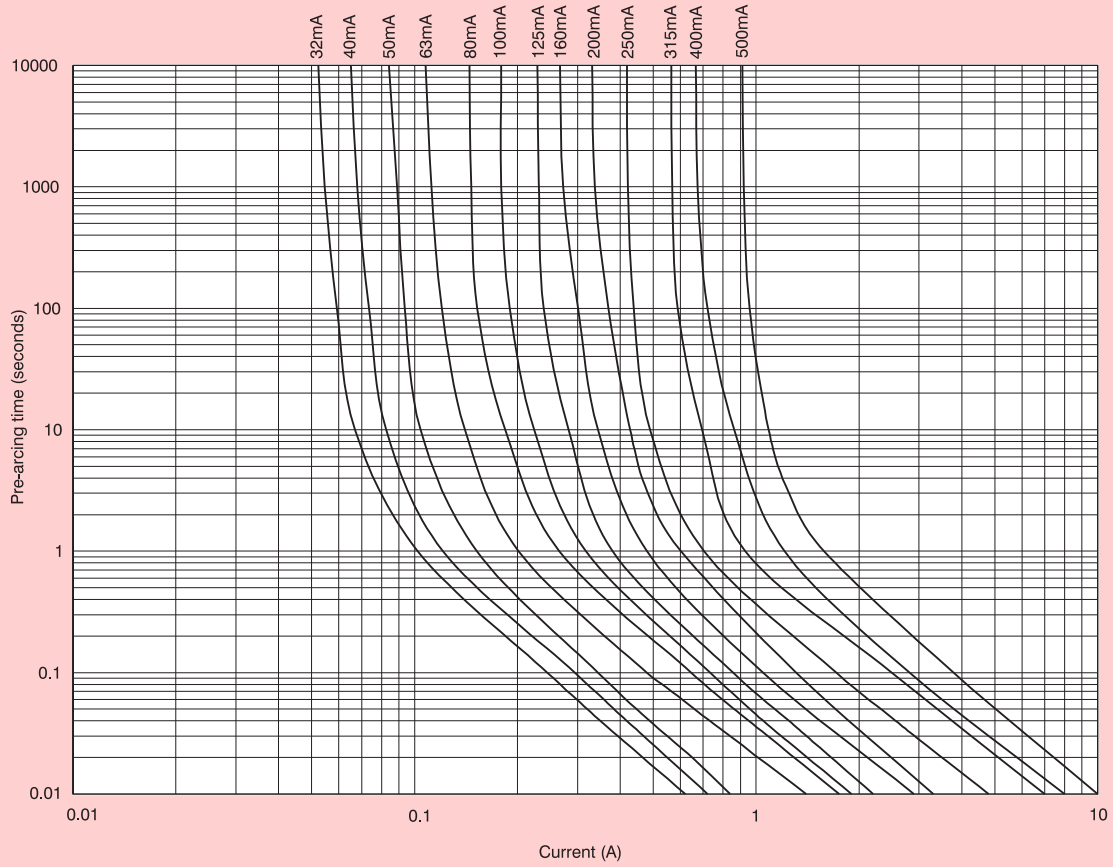

GDC and GDC-V only available up to 400mA

S504 Range: 630mA to 6.3A

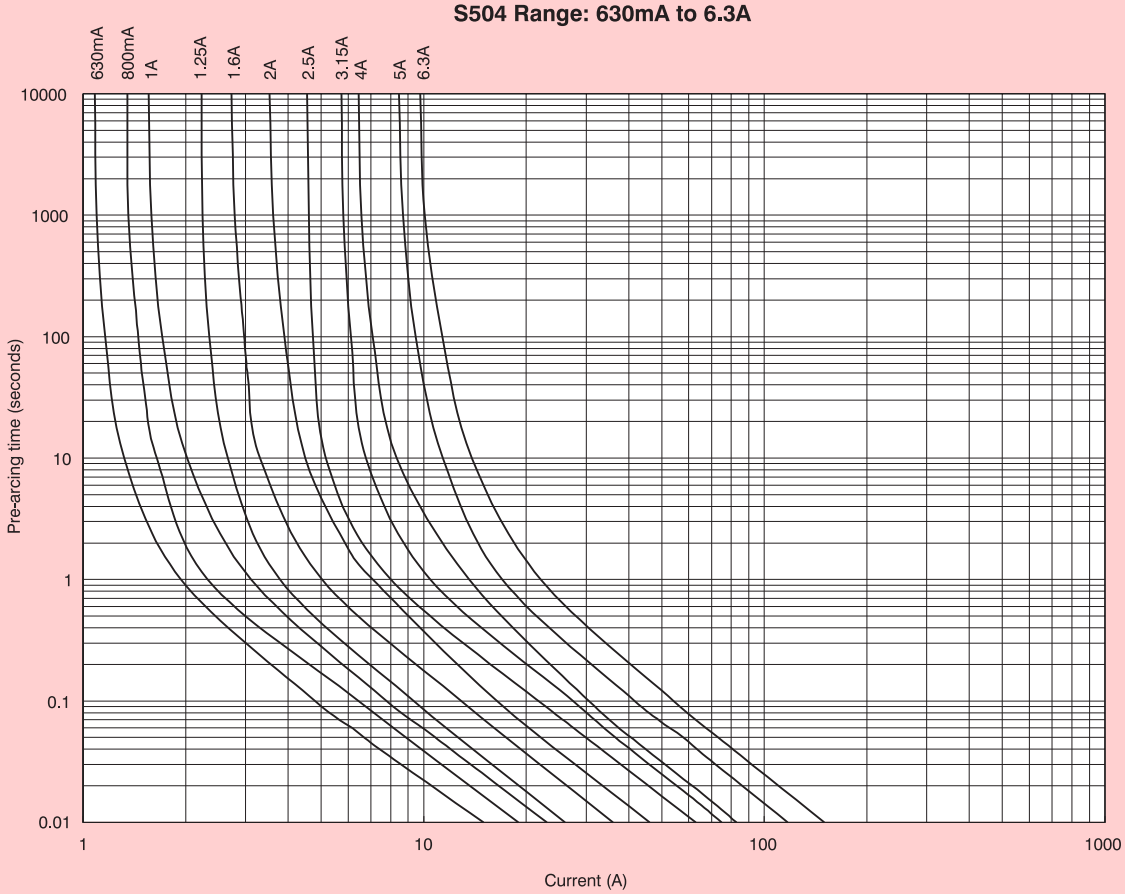

S505 and S505-V (Axial Leads)



Order Code:	S505 + Rating
Type:	Time-Delay, High Breaking Capacity.
Size:	5 x 20mm
Construction:	Ceramic Tube, electro-plated brass end caps.
Ratings:	500mA to 10A
Rated Voltage:	250V ac
Packing:	10's, 100's, 1000's
Weight:	1000 = 1.2kgs

Agency Approvals:

Designed to IEC60127-2-5

Dimensions (mm):

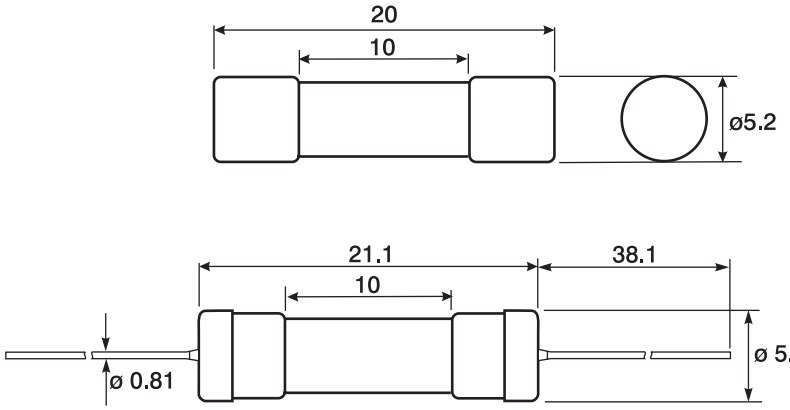

Breaking Capacity: 1500A at 250V, 50Hz, pf ≈ 0.7 - 0.8

Performance Data

Rating	Max mV @I_n	Max. Power Loss (W) @ 1.5 I_n	Min. Pre-arcing I^2t @ 10I_n (A^2s)						
500mA	360	0.62	0.14						
800mA	280	0.72	0.46						
1.0A	170	0.48	1.0			♦		♦	♦
1.25A	150	0.49	1.6	♦	♦	♦	♦	♦	♦
1.6A	130	0.52	3.0	♦	♦	♦	♦	♦	♦
2.0A	110	0.56	5.6	♦	♦	♦	♦	♦	♦
2.5A	100	0.59	12	♦	♦	♦	♦	♦	♦
3.15A	90	0.71	21	♦	♦	♦	♦	♦	♦
4.0A	85	0.90	43	♦	♦	♦	♦	♦	♦
5.0A	80	1.0	72	♦	♦	♦	♦	♦	♦
6.3A	75	1.1	135	♦	♦	♦	♦	♦	♦
8.0A	75	1.6	230						
10.0A	80	3.6	290						

Time current characteristics

S505 Range: 500mA to 2A

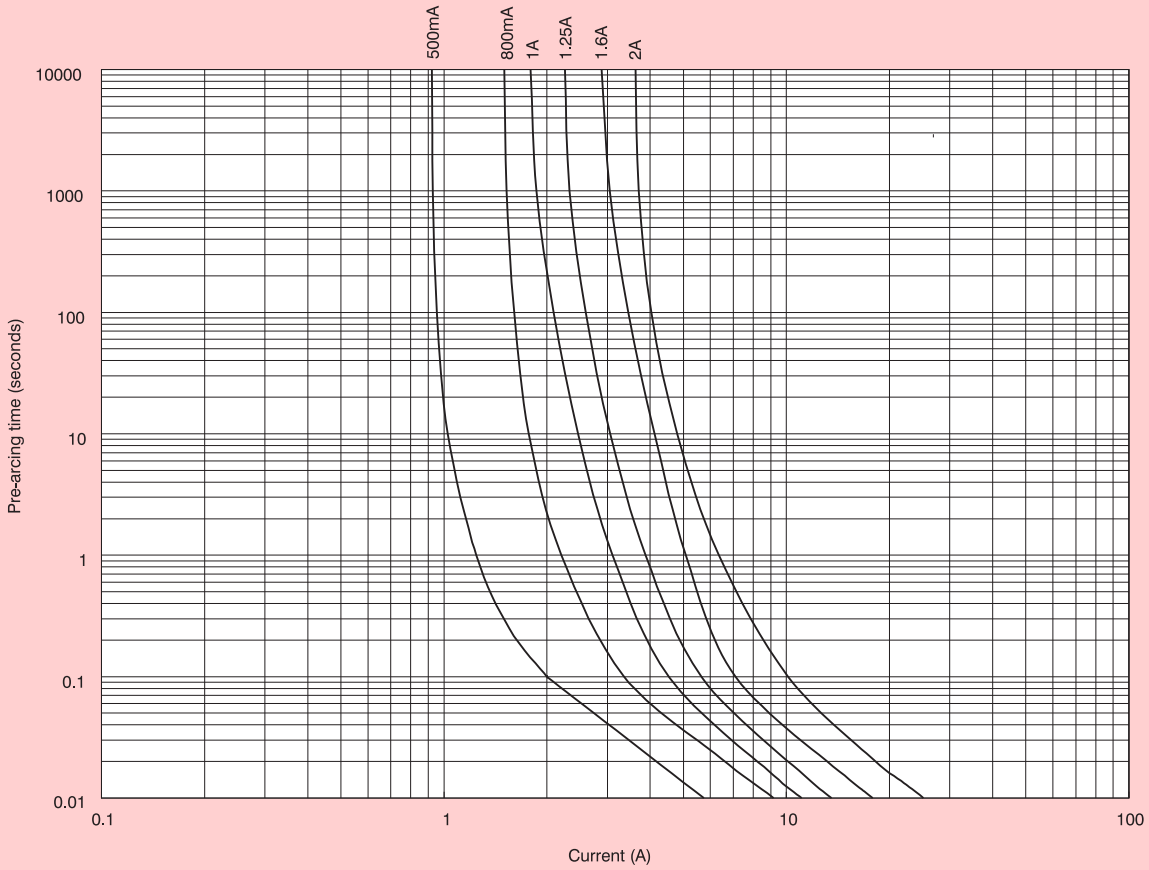

S505 Range: 2.5A to 10A

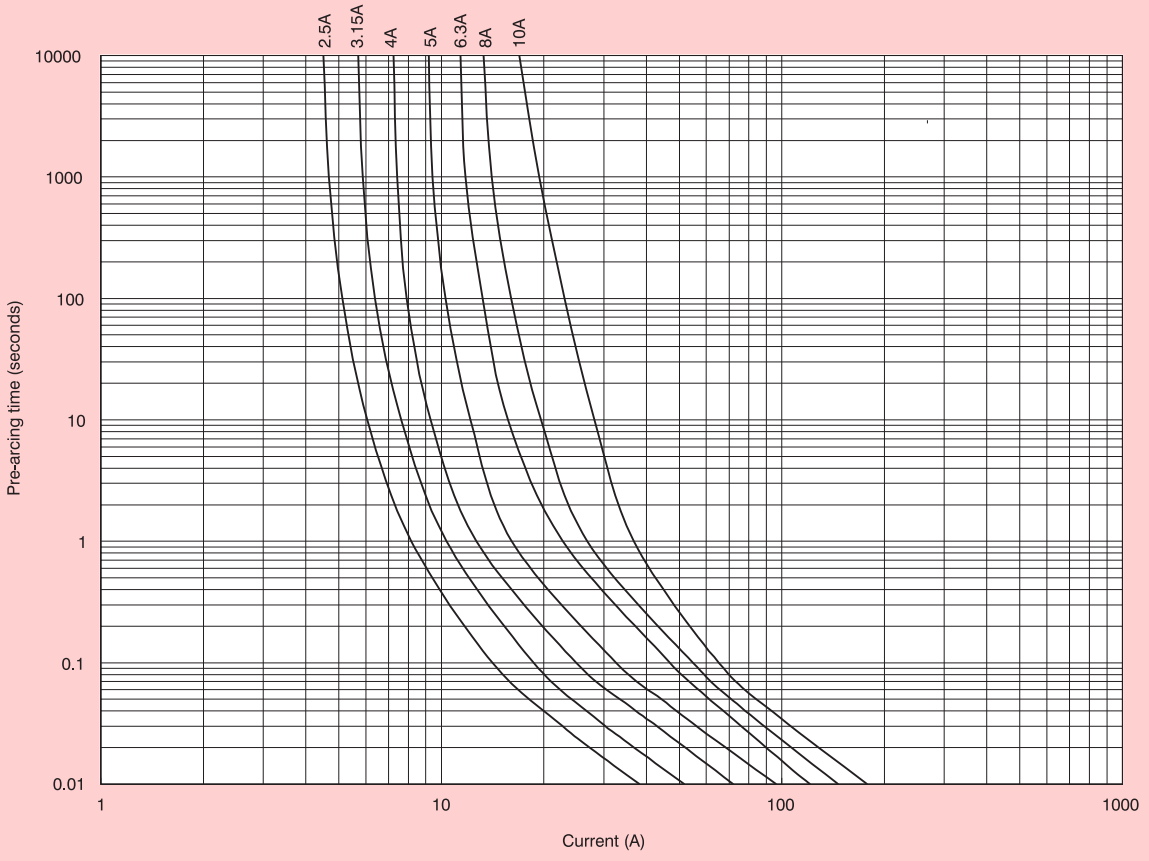

S506 (GDC, GDC-V Axial Leads)



Order Code:	S506 + Rating GDC + Rating (USA) GDC-V + Rating
Type:	Time-Delay, Low Breaking Capacity
Size:	5 x 20mm
Construction:	Glass Tube, electro-plated end caps
Ratings:	500mA to 12.5A
Rated Voltage:	250V ac
Packing:	10's, 100's, 1000's
Weight:	1000 = 0.81kgs

Agency Approvals:

Designed to IEC60127-2-3

Dimensions (mm):

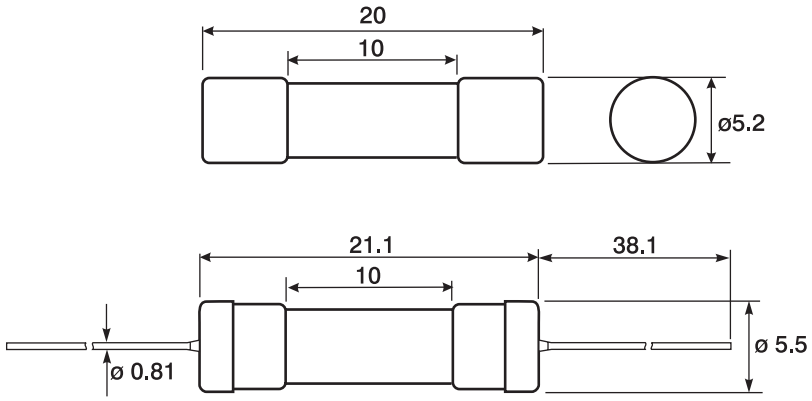

Breaking Capacity: 35A at 250V (500mA to 3.15A), 10 x I_n at 250V (4A to 12.5A). Power factor 1.0

Performance Data

Rating	Max mV @I_n	Max. Power Loss (W) @ 1.5 I_n	Min. Pre-arcing I^2t @ 10I_n (A^2s)						
500mA	190	0.27	0.67	♦	♦	♦		♦	
630mA	170	0.32	1.0	♦	♦	♦		♦	
800mA	150	0.36	2.2	♦	♦	♦	♦	♦	
1.0A	90	0.23	2.7	♦	♦	♦	♦	♦	♦
1.25A	85	0.27	6.7	♦	♦	♦	♦	♦	♦
1.6A	85	0.33	9.7	♦	♦	♦	♦	♦	♦
2.0A	85	0.44	15	♦	♦	♦	♦	♦	♦
2.5A	85	0.46	25	♦	♦	♦	♦	♦	♦
3.15A	80	0.57	51	♦	♦	♦	♦	♦	♦
4.0A	80	0.79	88	♦	♦	♦	♦	♦	♦
5.0A	75	0.97	150	♦	♦	♦	♦	♦	♦
6.3A	75	1.1	214	♦	♦	♦	♦	♦	♦
8.0A	80	-	192						
10.0A	75	-	420						
12.5A	75	-	812						

Time current characteristics

S506, GDC and GDC-V Range: 500mA to 2A

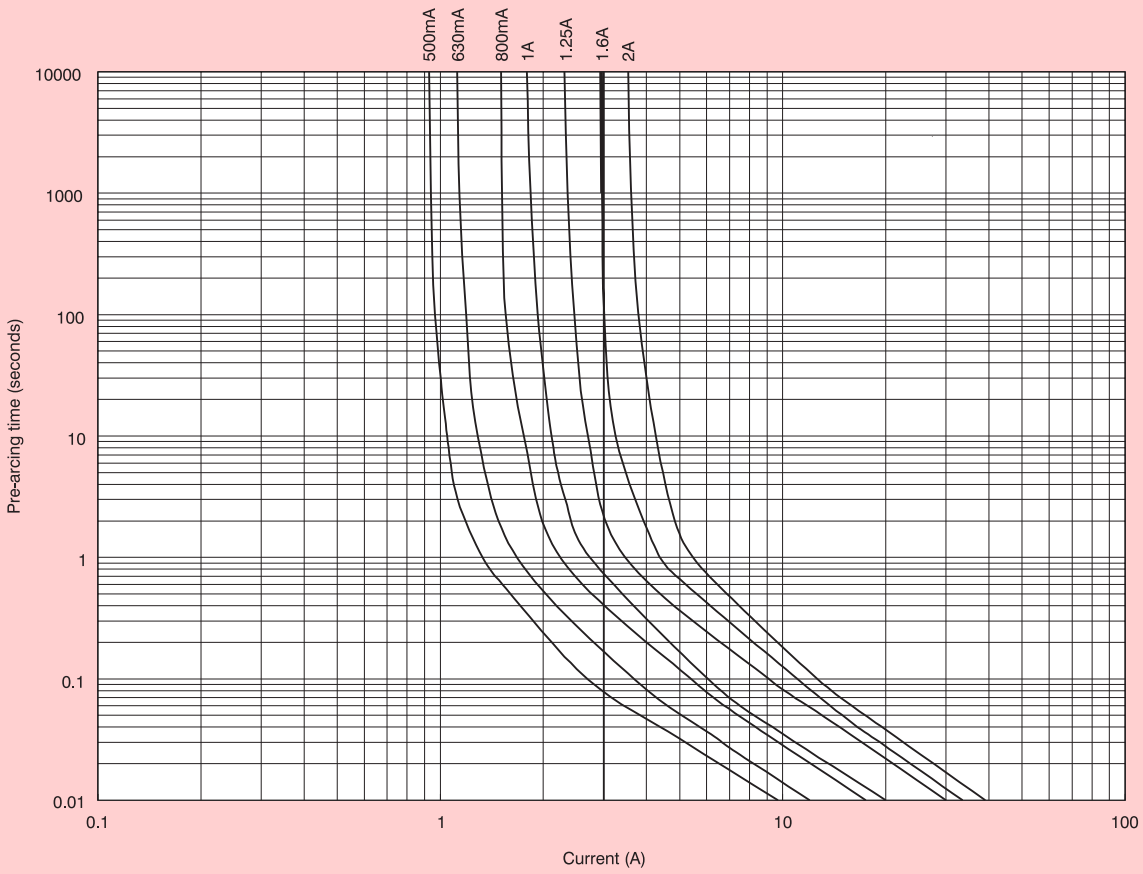

S506, GDC and GDC-V Range: 2.5A to 12.5A

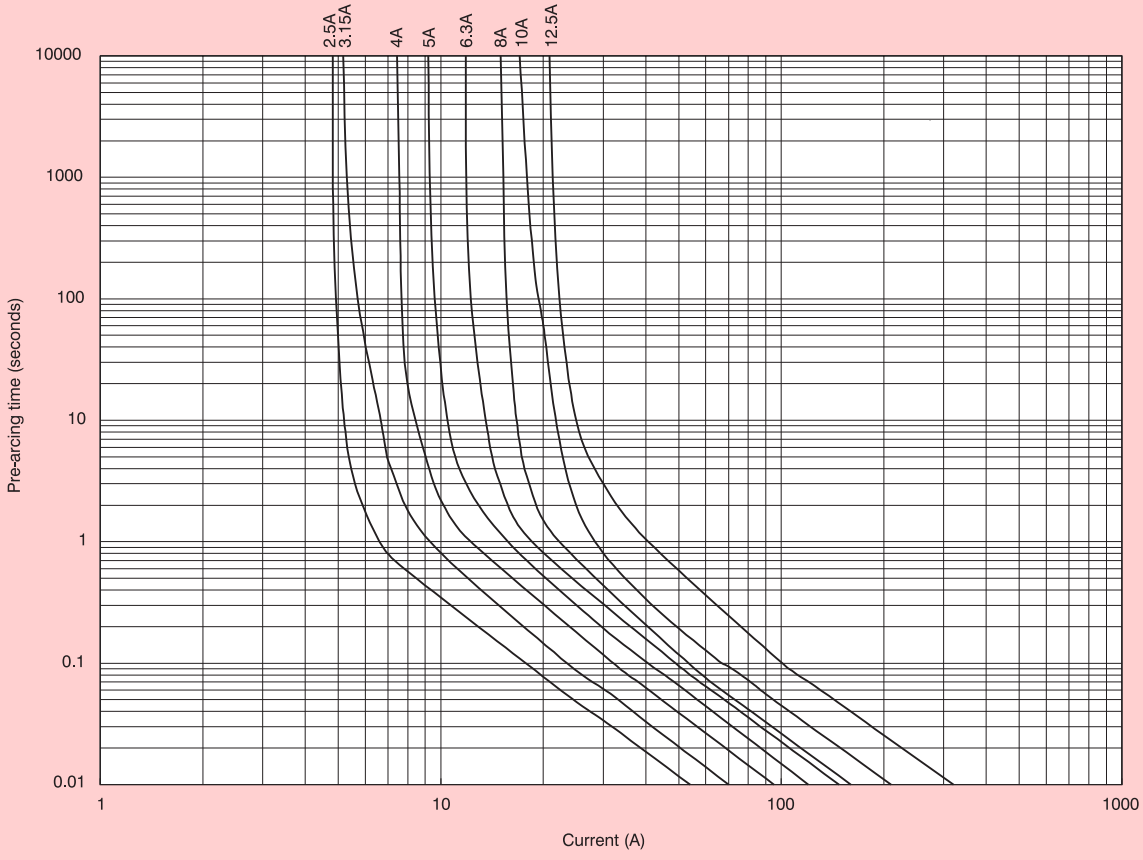

S508



Order Code:	S508 + Rating
Type:	Time Delay, Enhanced Breaking Capacity
Size:	5 x 20mm
Construction:	Glass Tube, electro-plated end caps
Ratings:	32mA to 3.15A
Rated Voltage:	250V ac

Agency Approvals:

Designed to IEC60127-2-6

Dimensions (mm):

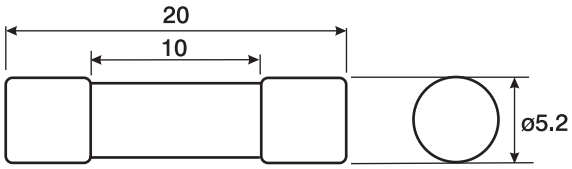

Breaking Capacity: 150A @ 250V ac pf ≈ 1

Performance Data

Rating	Max mV @I_n	Max. Power Loss (W) @ 1.5 I_n	Min. Pre-arcing I^2t @ 10I_n (A^2s)	
32mA	1100	0.14	0.0038	♦
40mA	960	0.17	0.0054	♦
50mA	860	0.17	0.0072	♦
63mA	800	0.17	0.017	♦
80mA	610	0.18	0.030	♦
100mA	520	0.18	0.035	♦
125mA	420	0.18	0.050	♦
160mA	340	0.21	0.076	♦
200mA	360	0.33	0.10	♦
250mA	290	0.33	0.20	♦
315mA	270	0.33	0.53	♦
400mA	230	0.33	0.80	♦
500mA	190	0.27	0.67	♦
630mA	170	0.32	1.0	♦
800mA	150	0.36	2.2	♦
1.0A	90	0.23	2.7	♦
1.25A	85	0.27	6.7	♦
1.6A	85	0.33	9.7	♦
2.0A	85	0.44	15	♦
2.5A	85	0.46	25	♦
3.15A	80	0.57	51	♦

Time current characteristics

S508 Range: 32mA to 400mA

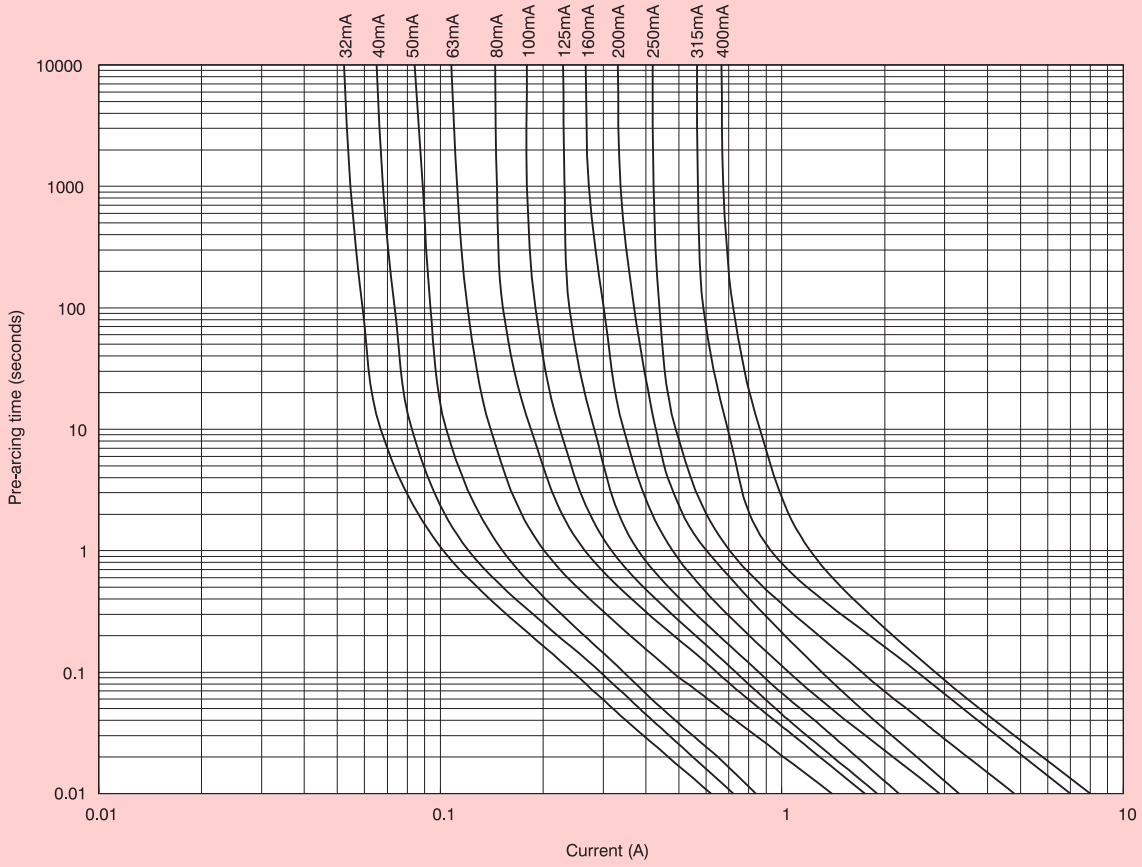

S508 Range: 500mA to 3.15A

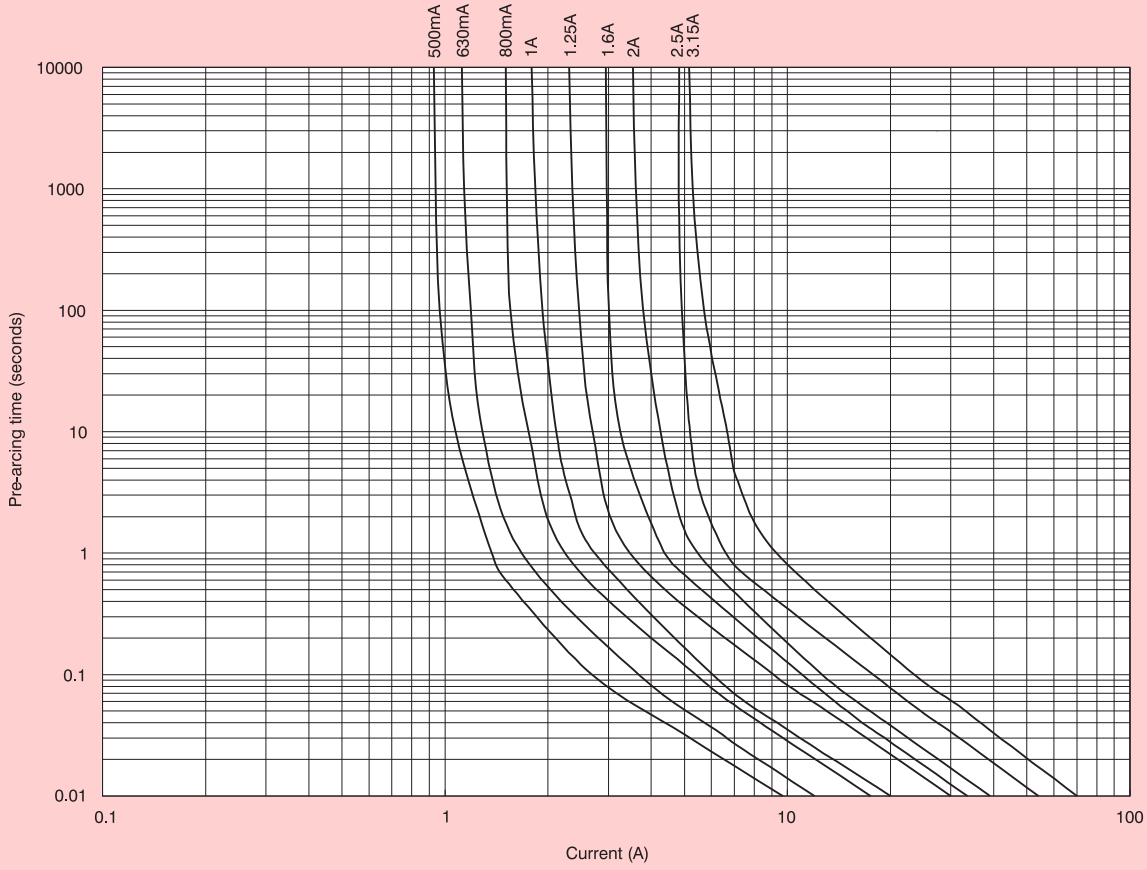

GMA and GMA-V (Axial Leads)



Order Code: GMA or GMA-V + Rating
(GMA-V fitted with Axial Leads)

Type:	Fast Acting
Size:	5 x 20mm
Construction:	Glass Tube, electro-plated brass end caps.
Ratings:	63mA to 15A
Rated Voltage:	63mA-3A - 250V ac 3.15A-15A - 125V ac
Packing:	10's, 100's, 1000's
Weight:	1000 = 0.73kg

Agency Approvals:

Designed to UL248-14

Dimensions (mm):

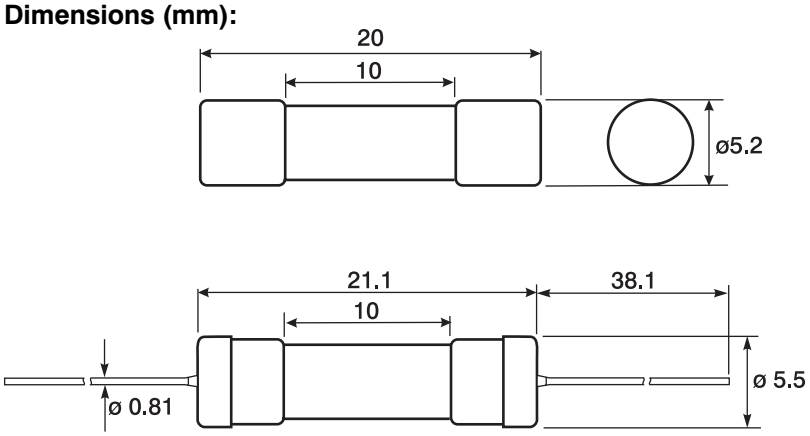

Performance Data

Rating	Breaking Capacity	Max mV @ I_n	Max. Power Loss (W) @ I_n	Min. Pre-arcing I^2t @ $10I_n$ (A^2s)	UL		CSA	
63mA	35A/250V ac 10kA/125V ac p.f. =0.7 - 0.8	4900	0.31	0.000833	♦		♦	
100mA		4300	0.43	0.00180	♦		♦	
125mA		3700	0.46	0.00359	♦		♦	
200mA		3600	0.72	0.00800	♦		♦	
250mA		2300	0.58	0.0150	♦		♦	
300mA		500	0.15	0.0198	♦		♦	
315mA		500	0.16	0.0218	♦		♦	
500mA		230	0.12	0.103	♦		♦	
600mA		210	0.13	0.180	♦		♦	
750mA		210	0.16	0.456	♦		♦	
800mA		200	0.16	0.518	♦		♦	
1.0A		300	0.30	0.520	♦		♦	♦
1.2A	100A/250V ac 10kA/125V ac p.f. = 0.7 - 0.8	300	0.36	0.720	♦		♦	
1.25A		300	0.38	0.766	♦		♦	
1.5A		270	0.41	1.35	♦		♦	
1.6A		260	0.42	1.28	♦		♦	
2.0A		240	0.48	2.40	♦		♦	
2.5A		220	0.55	4.63	♦		♦	
3.0A		220	0.66	7.20	♦		♦	
3.15A	10kA/125V ac p.f. = 0.7 - 0.8	220	0.69	7.94	♦		♦	
3.5A		210	0.74	10.2	♦		♦	
4.0A		210	0.84	14.4	♦		♦	
5.0A		200	1.0	25.0	♦		♦	
6.0A		170	1.0	39.6	♦		♦	♦
7.0A	200A/125V ac p.f. = 1.0	120	0.84	93.1		♦		♦
8.0A		110	0.88	141		♦		♦
10.0A		110	1.1	270		♦		♦
15.0A	150A/125V ac p.f. = 1.0	100	1.5	630		♦		♦

Time current characteristics

GMA Range: 63mA to 800mA

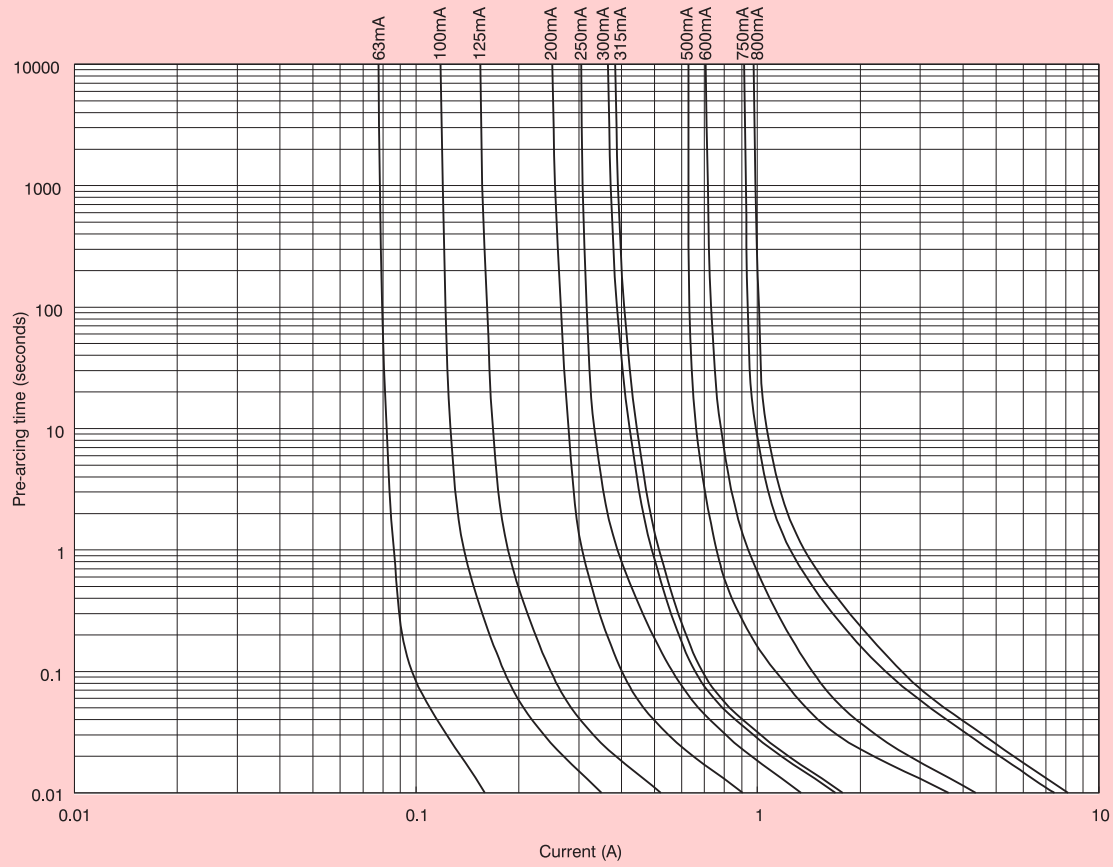

GMA Range: 1A to 15A

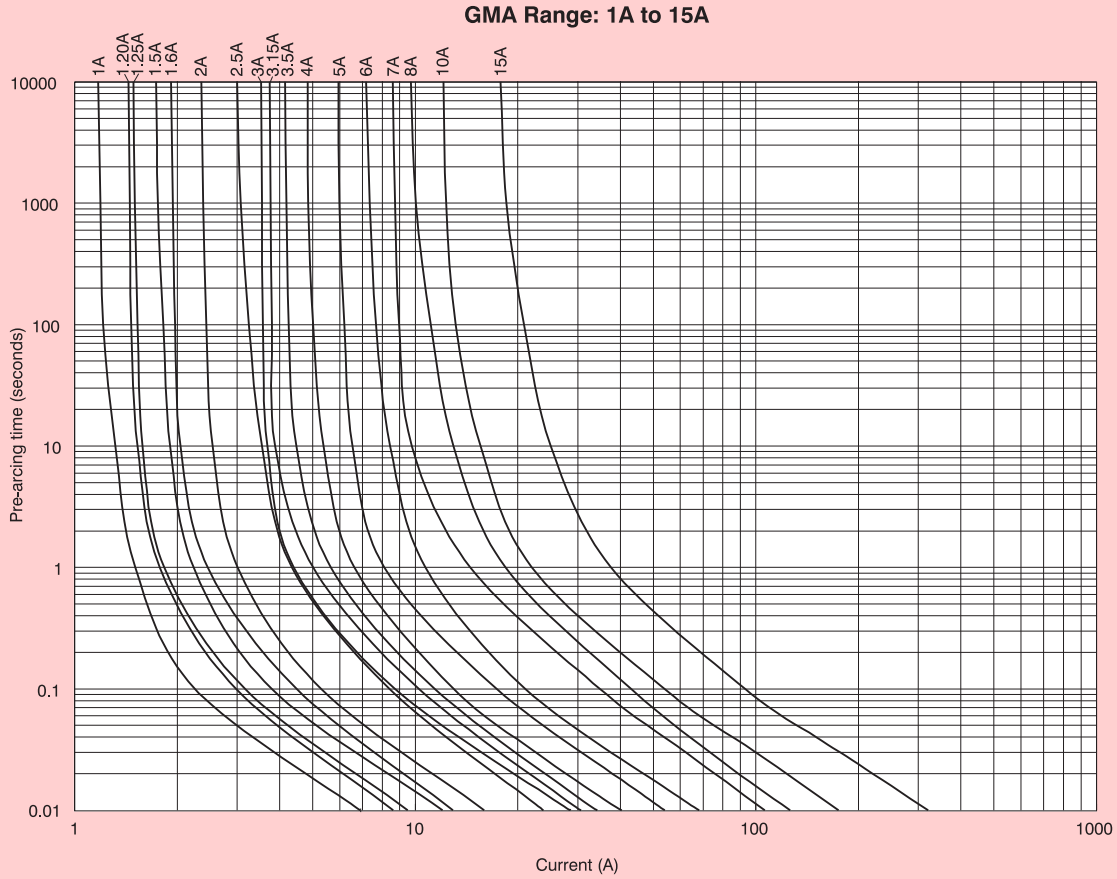

GMC and GMC-V (Axial Leads)

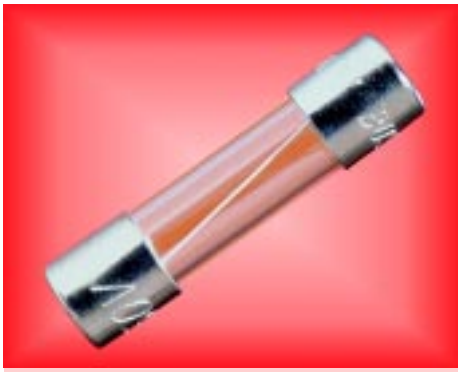

Agency Approvals:

Designed to UL 248-14.

Dimensions (mm):

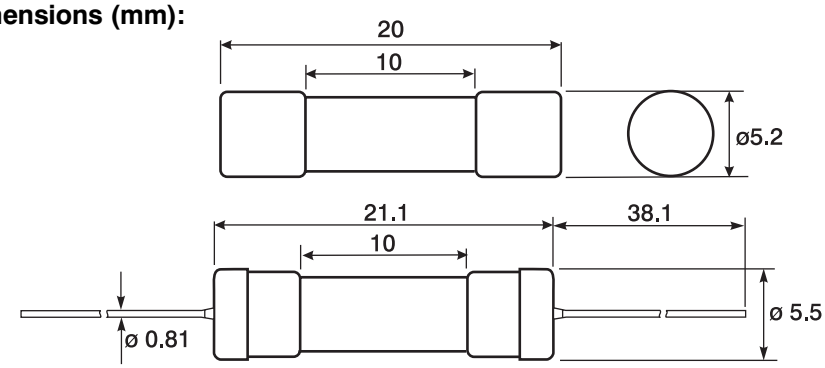

Order Code: GMC or GMC-V + Rating

Type: Medium Time Delay

Size: 5 x 20mm

Construction: Glass Tube, electro-plated brass end caps.

Ratings: 50mA to 10A

Rated Voltage: 50mA to 3.15A - 250V ac
3.5A to 10A - 125V ac

Packing: 10's, 100's, 1000's

Weight: 1000 = 0.74kg

Performance Data

Rating	Breaking Capacity	Max. mV @ I_n	Max. Power Loss (W) @ I_n	Min. Pre-arcing I^2t @ $10I_n$ (A2s)	UL		SA	
50mA	35A/125V ac 10kA/125V ac p.f. = 0.7 - 0.8	1600	0.080	0.0032	♦		♦	
63mA		1400	0.088	0.0040	♦		♦	
80mA		1400	0.11	0.0064	♦		♦	
100mA		1200	0.12	0.010	♦		♦	
125mA		1000	0.13	0.016	♦		♦	
150mA		800	0.12	0.023	♦		♦	
160mA		730	0.12	0.026	♦		♦	
200mA		650	0.13	0.040	♦		♦	
250mA		490	0.12	0.063	♦		♦	
300mA		580	0.17	0.090	♦		♦	
315mA		480	0.15	0.099	♦		♦	
400mA		510	0.20	0.16	♦		♦	
500mA		370	0.19	0.37	♦		♦	
600mA		360	0.22	0.50	♦		♦	
630mA		360	0.23	0.55	♦		♦	
700mA		340	0.24	0.88	♦		♦	
750mA		320	0.24	0.9	♦		♦	
800mA		290	0.23	0.9	♦		♦	
1.0A		250	0.25	1.0	♦		♦	♦
1.25A	100A/250V ac 10kA/125V ac p.f. = 0.7 - 0.8	200	0.25	2.5	♦		♦	♦
1.5A		190	0.29	3.6	♦		♦	♦
1.6A		160	0.26	4.8	♦		♦	♦
2.0A		130	0.26	6.0	♦		♦	♦
2.5A		130	0.33	6.8	♦		♦	♦
3.0A		130	0.39	10	♦		♦	♦
3.15A		130	0.41	16	♦		♦	♦
3.5A	10kA/125V ac p.f. = 0.7 - 0.8	130	0.46	19	♦		♦	♦
4.0A		120	0.48	28	♦		♦	♦
5.0A		120	0.60	45	♦		♦	♦
6.0A		120	0.72	79	♦		♦	♦
6.3A		120	0.76	79	♦		♦	♦
7.0A	200A/125V ac p.f. =1.0	120	0.84	93		♦		♦
8.0A		110	0.88	154		♦		♦
10.0A		110	1.10	270				♦

Time current characteristics

GMC Range: 50mA to 800mA

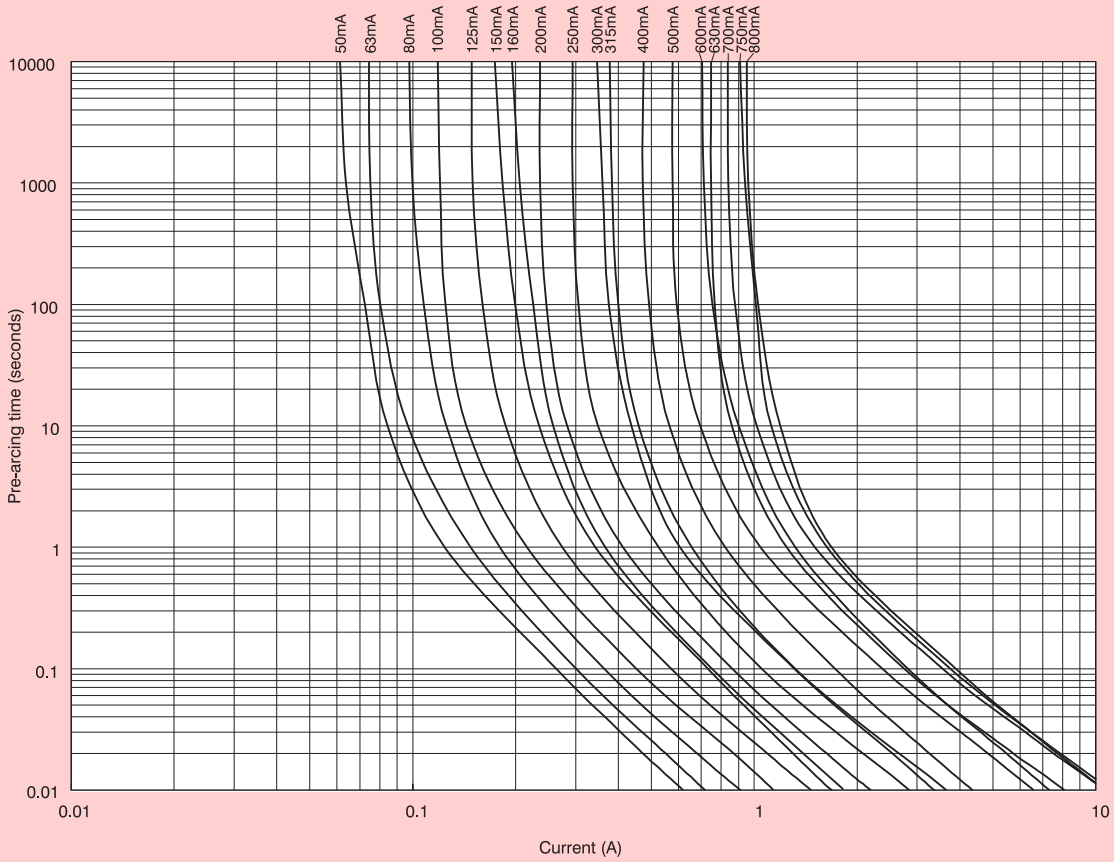

GMC Range: 1A to 10A

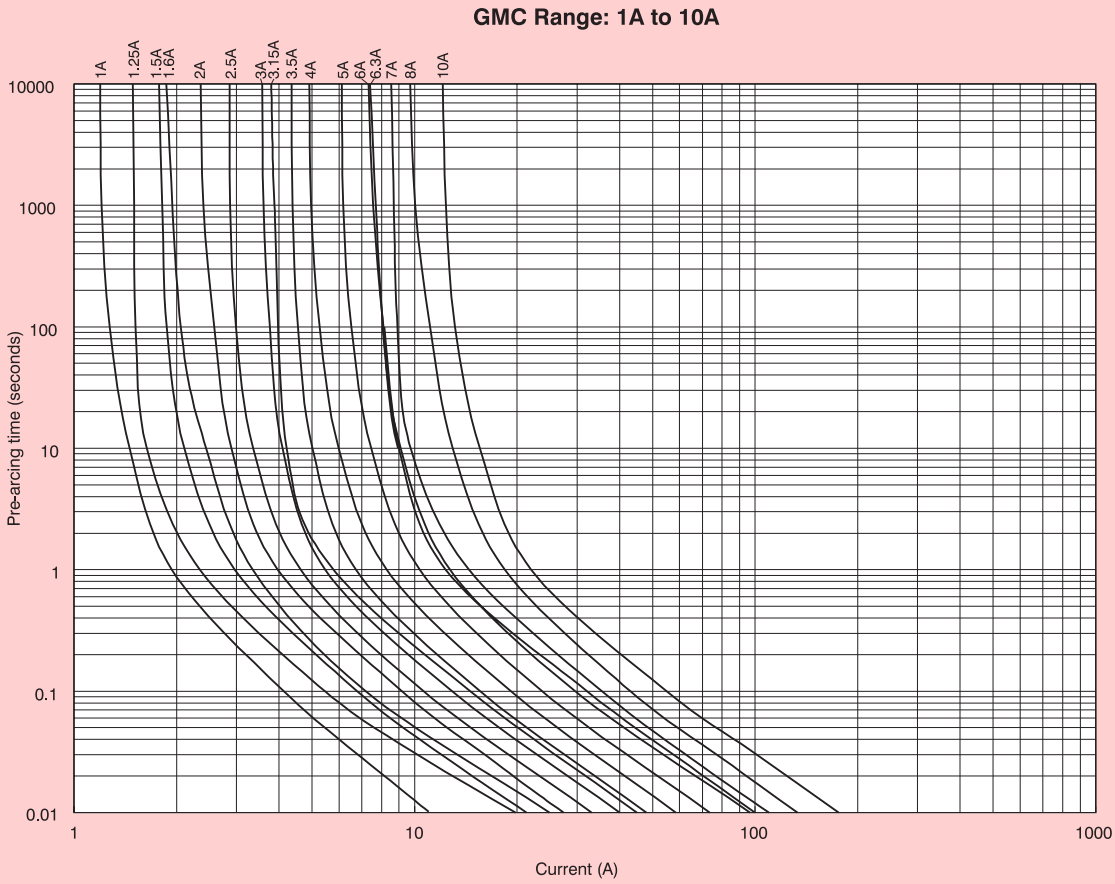

GMD and GMD-V (Axial Leads)

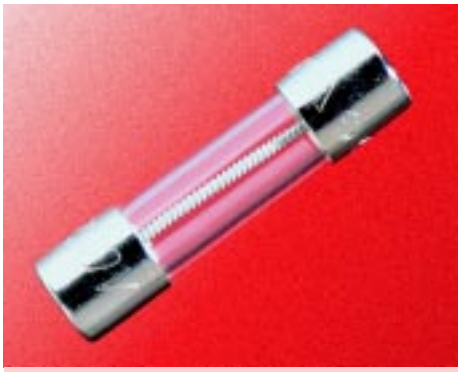

Order Code: GMD or GMD-V + Rating

Type:	Time Delay
Size:	5 x 20mm
Construction:	Glass Tube, electro-plated brass end caps.
Ratings:	125mA to 4A
Rated Voltage:	250V ac
Packing:	10's, 100's, 1000's
Weight:	1000 = 0.79kgs

Agency Approvals:

Designed to UL 248-14

Dimensions (mm):

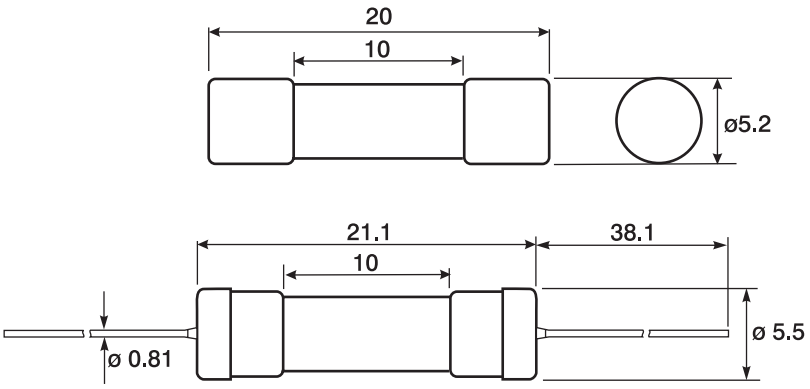

Performance Data

Rating	Breaking Capacity	Max mV @ I_n	Max. Power Loss (W) @ I_n	Min. Pre-arcing I^2t @ $10I_n$ (A^2s)	UL		SA	
125mA	35A/250V ac 10kA/125V ac p.f. = 0.7 - 0.8	1600	0.20	0.078	♦		♦	
150mA		1300	0.20	0.11	♦		♦	
160mA		1300	0.21	0.17	♦		♦	
187mA		1200	0.22	0.31	♦		♦	
200mA		1100	0.22	0.36	♦		♦	
250mA		900	0.23	0.56	♦		♦	
300mA		760	0.23	0.93	♦		♦	
315mA		700	0.22	0.94	♦		♦	
375mA		660	0.25	1.2	♦		♦	
400mA		580	0.23	1.2	♦		♦	
500mA		540	0.27	2.2	♦		♦	
600mA		400	0.24	4.6	♦		♦	
630mA		400	0.25	7.1	♦		♦	
750mA		400	0.30	8.4	♦		♦	
800mA		330	0.26	9.6	♦		♦	
1.0A		300	0.30	14	♦		♦	♦
1.2A	100A/250V ac 10kA/125V ac p.f. = 0.7 - 0.8	330	0.40	17	♦		♦	♦
1.25A		250	0.31	14	♦		♦	♦
1.5A		250	0.38	27	♦		♦	♦
1.6A		220	0.35	30	♦		♦	♦
2.0A		190	0.38	68	♦		♦	♦
2.5A		190	0.48	113	♦		♦	♦
3.0A		170	0.51	153	♦		♦	♦
4.0A	200A/250V ac 10kA/125V p.f. = 1	160	0.64	224		♦		♦

Time current characteristics

GMD Range: 125mA to 800mA

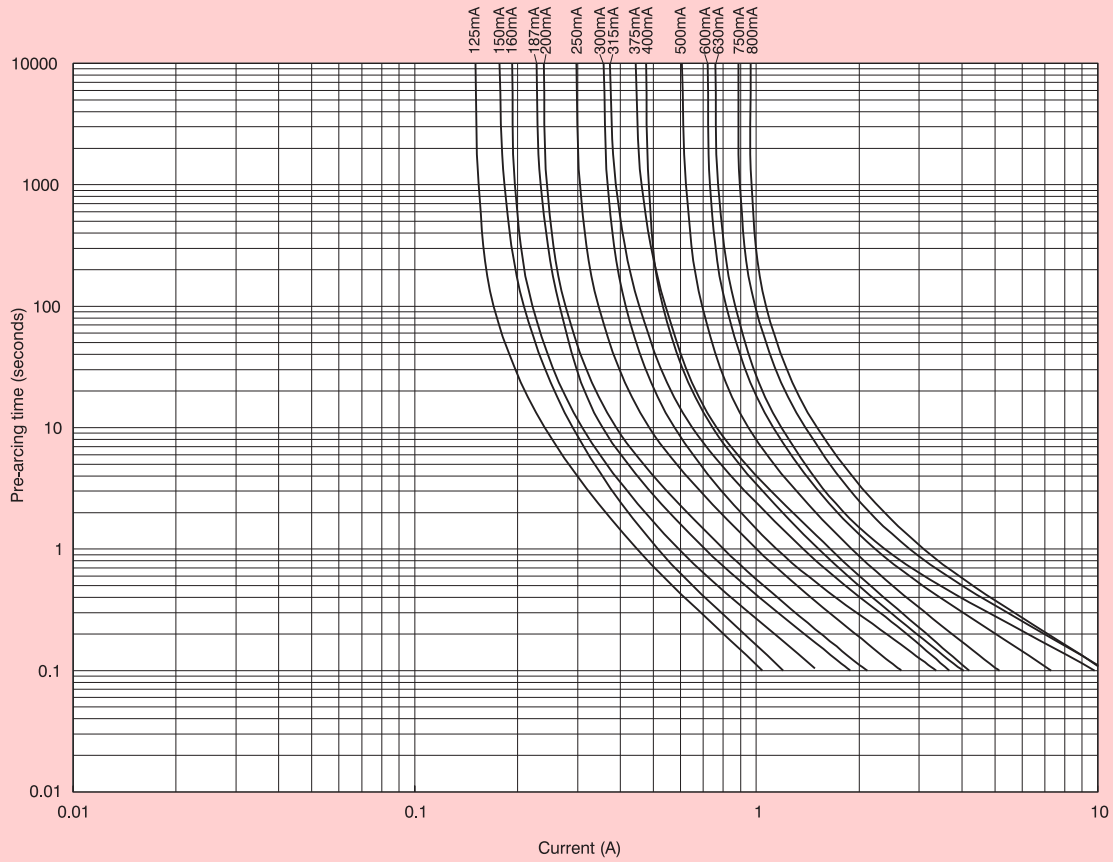

GMD Range: 1A to 4A

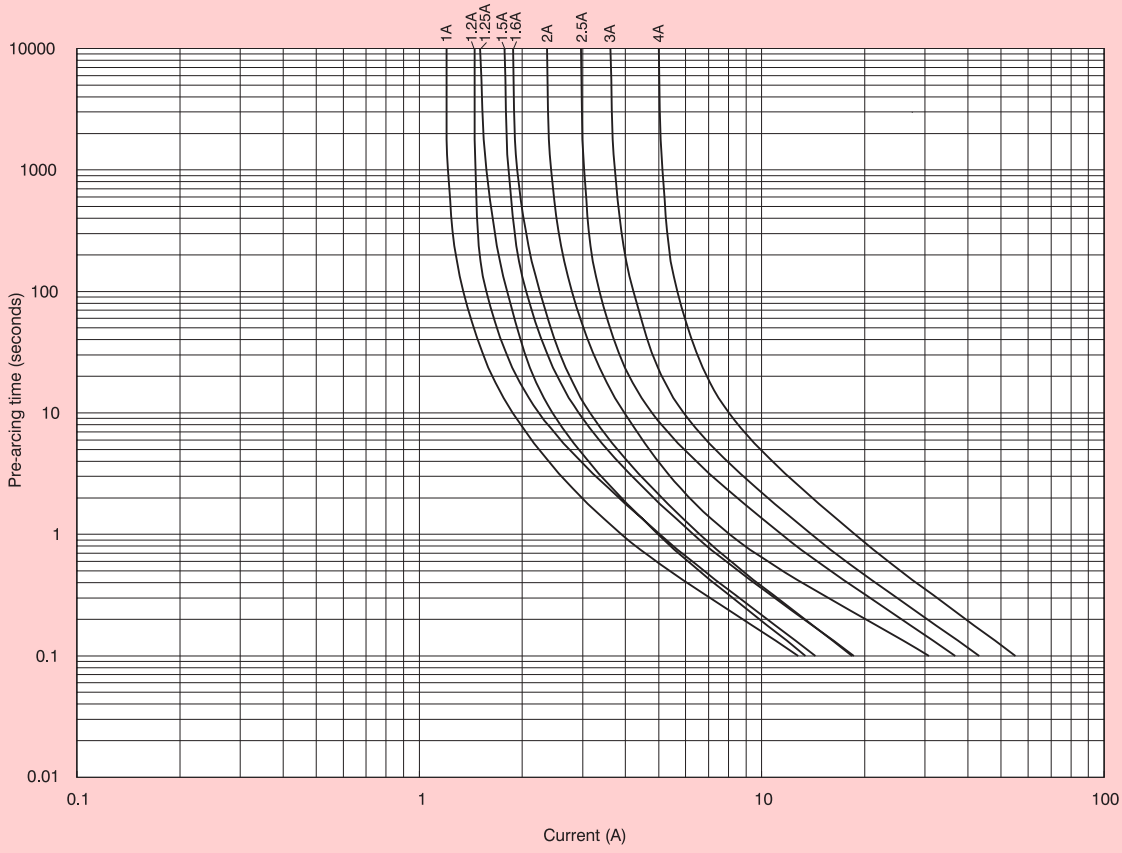

TDC10



Order Code:	TDC10 + -Rating
Type:	Fast Acting
Size:	6.3 x 32mm
Construction:	Glass Tube, electro-plated brass end caps
Ratings:	50mA to 25A
Packing:	Bulk quantities only

Designed to British Standard BS2950A

Breaking Capacity: 10 times rated current @ rated voltage

Rating	Rated Voltage V ac	Rating	Rated Voltage V ac
50mA	1000	2A	250
60mA		3A	
100mA		5A	
150mA		7A	150
250mA		10A	100
500mA	750	12A	32
750mA	500	15A	
1A	350	20A	
1.5A	250	25A	

C387

Ordering Code:	C387 + Rating
Type:	Fast Acting
Construction:	Glass Tube with electro-plated brass end caps
Ratings:	50mA to 25A
Rated Voltage:	50mA to 6.3A - 250V 8A & 10A - 100V 12A - 25A 32V

Dimensions (mm):

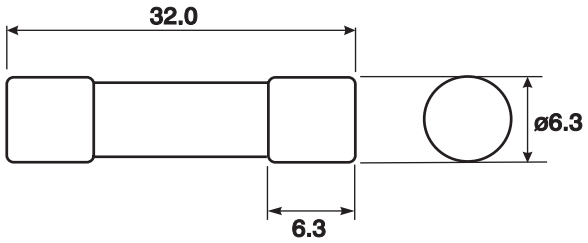

Performance Data:

Rated Current	I_n		$2.0I_n$	
Total Operating Time	Min	Max	Min	Max
	1000 hours	-	-	10 seconds

Breaking Capacity: $10I_n$ at rated voltage or 63A whichever is greater

Available Ratings

Rating	Rated Voltage V ac	Rating	Rated Voltage V ac	Rating	Rated Voltage V ac
50mA	250	500mA	250	5A	250
63mA		630mA		6.3A	
80mA		800mA		8A	100
100mA		1A		10A	
125mA		1.25A		12A	32
160mA		1.6A		15A	
200mA		2A		16A	
250mA		2.5A		20A	
315mA		3.15A		25A	
400mA		4A			

Time current characteristics

TDC 10 Range: 50mA to 1A

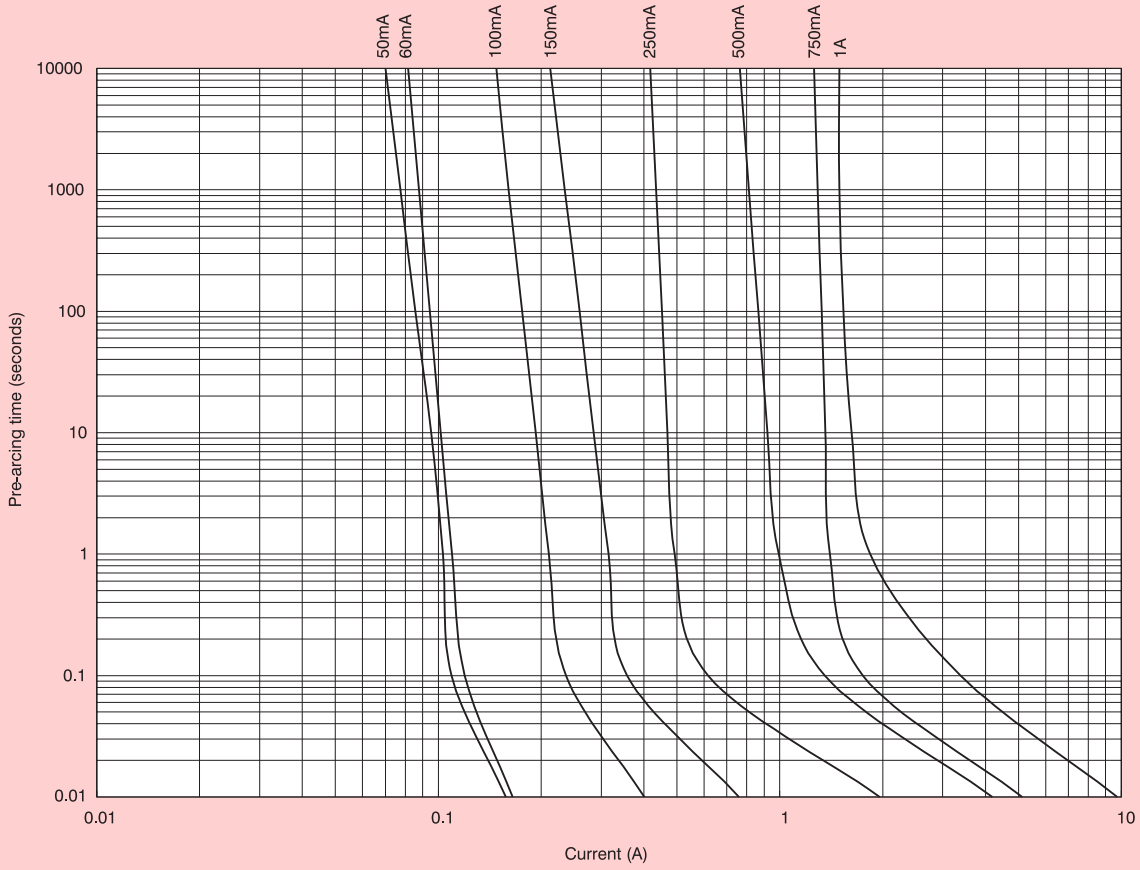

TDC 10 Range: 1.5A to 25A

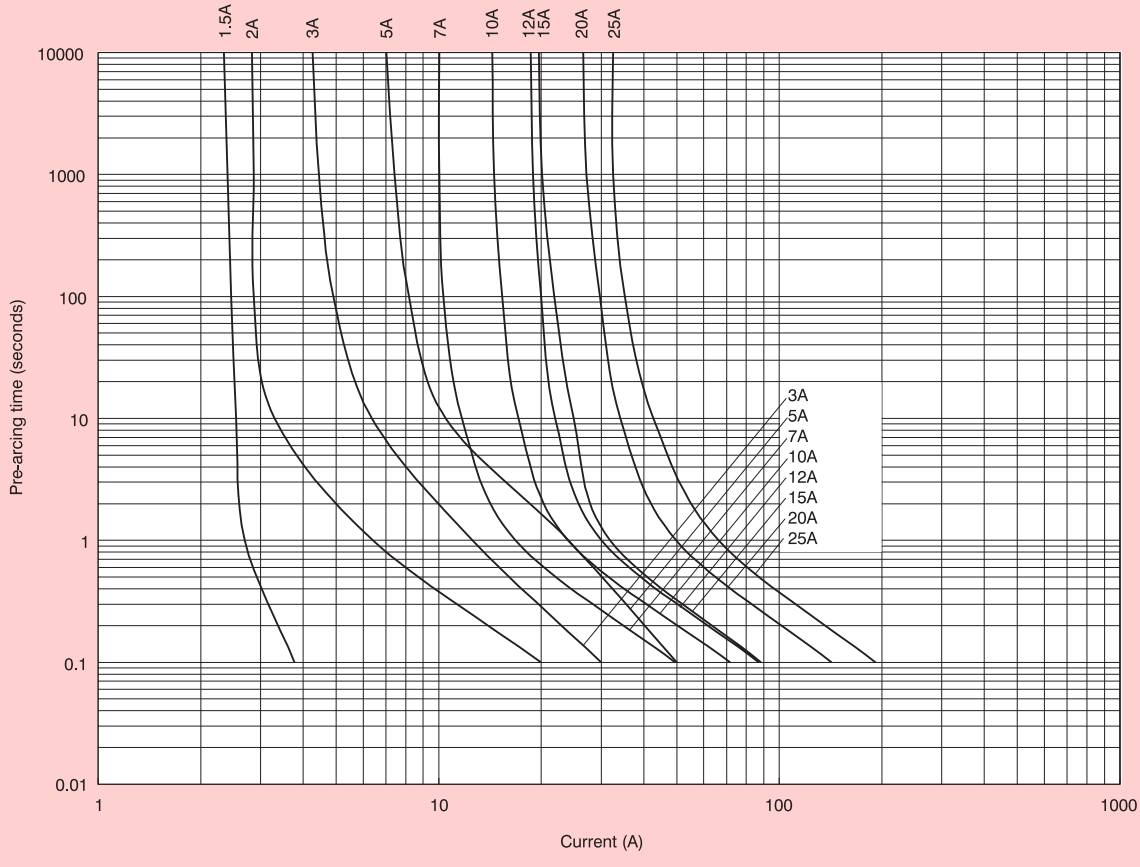

AGC and AGC-V (Axial Leads)



Order Code:	Packing Code + AGC + Rating
Type:	Fast Acting
Construction:	Glass tube, electro-plated brass end caps
Ratings:	50mA to 30A
Rated Voltage:	50mA to 10A - 250V ac 15A to 30A - 32V ac
Packing:	5's and 100's

Agency Approvals:

Designed to UL 248-14 specifications.

Dimensions (mm):

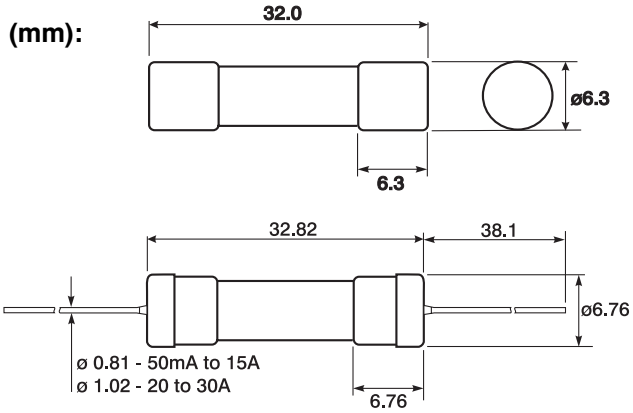

Packing Codes: BK/ bulk pack in 100's; blank - packed in standard 5's.

Notes on Performance Data in the table below.

1. Breaking capacity 0.7 - 0.8 power factor on AC
2. Voltage drop was measured at 25 deg. C ± 3 deg. C ambient temperature.
3. I^2t was measured at listed breaking capacity and rated voltage.
4. Breaking capacity for AGC 2 to 10A @ 125V is 10,000A. Breaking capacity listed corresponds to maximum rated voltage.
5. Other available ratings - 2mA, 5mA, 10mA, 20mA, 31.25mA, 150mA, 175mA, 333.3mA 400mA, 600mA, 800mA, 1.2A, 1.3A, 1.6A, 1.75A, 1.8A, 3.2A, 4.5A, 6.25A, 7.5A, 12A, 14A.
6. 1 to 10A UL recognised for 125V DC and 500A breaking capacity. Other DC ratings are self certified.

Performance Data

Rated Current	Rated Voltage (V)	Breaking Capacity 1	Pre-arcing I^2t (A^2 sec)3	Typical Operating 3 I^2t (A^2 sec)	Typical Voltage Drop2 Volts at Rated Current	Agency Approvals		
	ac (max)	ac	ac	ac				
50mA	250V	35A	2.6×10^{-4}	6.5×10^{-4}	0.67	♦		♦
63mA			2.4×10^{-4}	3.4×10^{-4}	10.41	♦		♦
100mA			5.5×10^{-4}	1.01×10^{-3}	6.0	♦		♦
125mA			.003	.69	4.67	♦		♦
190mA			.008	.84	4.12	♦		♦
200mA			.011	.74	4.51	♦		♦
250mA			.015	.38	0.89	♦		♦
300mA			.044	1.57	2.88	♦		♦
375mA			.091	2.59	4.59	♦		♦
450mA			.12	2.78	2.67	♦		♦
500mA			.28	2.75	0.59	♦		♦
750mA			.82	3.69	0.37	♦		♦
1A			1.5	5.21	0.31	♦		♦
1.25A		100A	1.95	11	0.35	♦		♦
1.5A			3.44	16	0.27	♦		♦
2A			5.4	22	0.28	♦		♦
2.25A			6.0	19	0.26	♦		♦
2.5A			5.3	19	0.31	♦		♦
3A			12	27	0.25	♦		♦
4A		200A	25	75	0.22	♦		♦
5A			7	40	0.23	♦		♦
6A			10	60	0.23	♦		♦
7A			13	68	0.23	♦		♦
8A			24	104	0.19	♦		♦
9A			211	238	0.18	♦		♦
10A			240	315	0.20	♦		♦
15A	32V	1000A	577	691	0.14		♦	♦
20A			1241	1450	0.12		♦	♦
25A			2276	2588	0.11		♦	♦
30A			3812	4098	0.12		♦	♦

ABC and ABC-V (Axial Leads)

Agency Approvals:

Design Specification to UL248-14



Order Code:	Packing Code + ABC + Rating
Type:	Fast Acting
Construction:	Ceramic body, electro-plated brass end caps
Ratings:	250mA to 30A
Voltage:	250mA to 20A - 250V; 25 & 30A - 125V ac
Packing:	5's and 100's

Dimensions (mm):

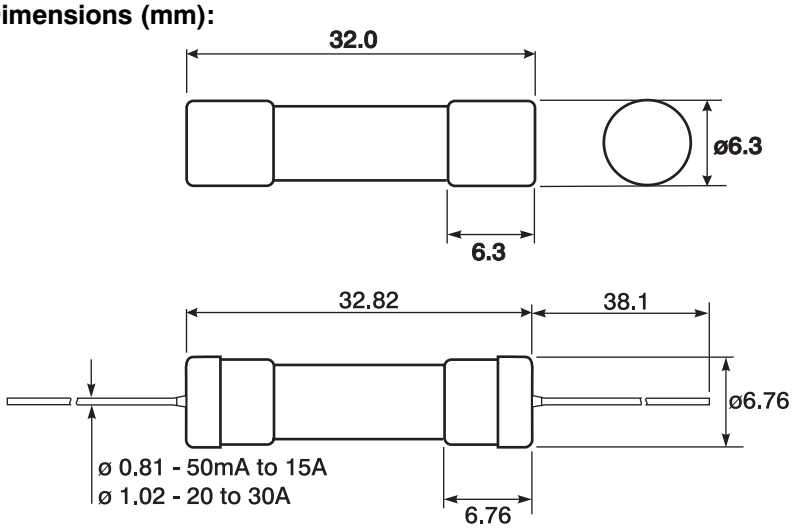

Notes on Performance Data in the table below.

1. Breaking capacity was measured at 0.7 - 0.8 power factor on AC.
2. Voltage drop was measured at 25 deg. C ± 3 deg. C ambient temperature at rated current.
3. I^2t was measured at listed breaking capacity and rated voltage.
4. Breaking capacity for ABC 250mA to 15A @ 125V is 10,000A. Breaking capacity listed corresponds to maximum rated voltage.
5. Other available ratings - 62.5mA, 100mA, 125mA, 375mA, 1.25A, 9A and 12A
6. DC ratings are self certified.

Performance Data

Rated Current	Rated Voltage (V)	Breaking Capacity 1	Pre-arcing I^2t (A^2 sec)	Typical Operating 3 I^2t (A^2 sec)	Typical Voltage Drop 2 Volts at Rated Current	Agency Approvals		
	ac (max)	ac	ac	ac				
250mA	250V	35A	.02	1.42	3.25	♦		♦
500mA			.26	1.45	0.51	♦		♦
750mA			.60	2.31	0.42	♦		♦
1A			1.47	3.27	0.35	♦		♦
1.5A		100A	2.8	13	0.35	♦		♦
2A			4.98	16	0.25	♦		♦
2.5A			8.56	20	0.26	♦		♦
3A			12.3	27	0.25	♦		♦
4A		200A	30.63	76	0.25	♦		♦
5A			19.53	46	0.23	♦		♦
6A			25.52	56	0.24	♦		♦
7A			65.23	113	0.20	♦		♦
8A			115.2	168	0.17	♦		♦
10A			209.6	293	0.15	♦		♦
15A		750A	484.3	515	0.12	♦		♦
20A		400A	497.0	616	0.13		♦	
25A	125V	1000A	830.0	1078	0.12		♦	
30A			1220.0	1438	0.14			

FWH High Speed Fuse Link for the Protection of Semiconductor Devices



Order Code:	FWH-+Rating+A6F
Type:	Fast Acting Semiconductor Fuse
Construction:	Ceramic Tube, electro-plated brass end caps
Ratings:	250mA to 30A
Rated Voltage:	500V ac
Packing:	10's

Agency Approvals:

Designed to UL standard 248-14

Dimensions (mm):

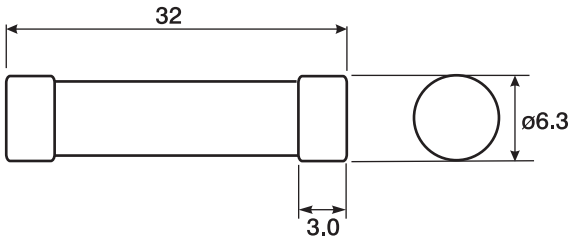

Breaking Capacity at rated voltage:

250mA to 20A - 50kA at ≥ pf 0.2
25A to 30A - 20kA at ≥ pf 0.2

Performance Data

Part Number	Current Rating	Pre-arcing I^2t (A^2s)	Operating I^2t @ 500V (A^2s)	Power Loss @ Rated Current (W)
FWH-.250A6F	250mA	0.01	0.05	2.7
FWH-.500A6F	500mA	0.05	0.25	1.2
FWH-001A6F	1A	0.4	2	1.7
FWH-002A6F	2A	1.3	3.5	3.2
FWH-3.15A6F	3.15A	3.1	7.7	2.9
FWH-005A6F	5A	15	40	2.1
FWH-6.3A6F	6.3A	36	90	2.3
FWH-007A6F	7A	50	125	2.5
FWH-010A6F	10A	TBA	TBA	TBA
FWH-12.5A6F	12.5A	20	TBA	3.53
FWH-015A6F	15A	44	146	3.08
FWH-016A6F	16A	48	177	4.48
FWH-020A6F	20A	75	259	4.26
FWH-025A6F	25A	TBA	TBA	TBA
FWH-030A6F	30A	TBA	TBA	TBA

GBB and GBB-V (Axial Leads)

Agency Approvals:

Designed to UL 248-14

Dimensions (mm):

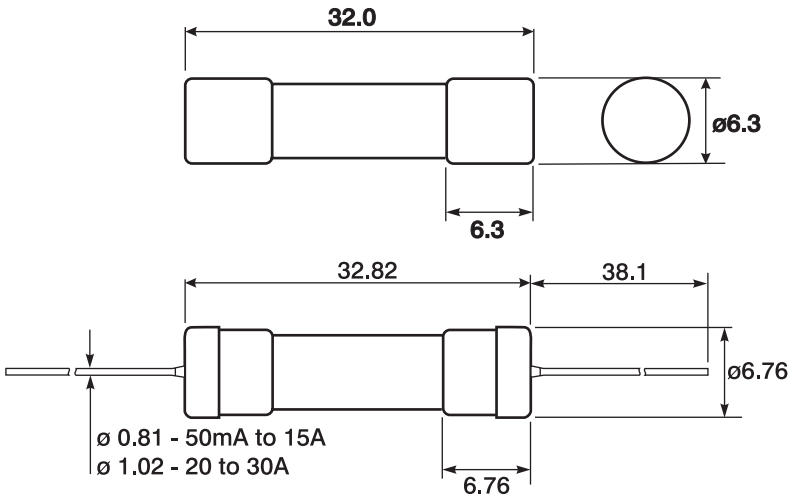



Order Code:	Packing Code + GBB + Rating
Type:	Very Fast Acting
Size:	6.3 x 32mm
Construction:	Ceramic Tube, electro-plated end caps
Ratings (A):	1, 1.25, 2, 3, 4, 5, 6, 7, 8, 9, 10, 12, 15, 20, 25, 30
Rated Voltage:	250V ac; 125V dc
Packing:	5's & 100's (BK/)
Fuse Holders:	HTB, HFB and Series 8000 fuse blocks

MDL and MDL-V (Axial Leads)

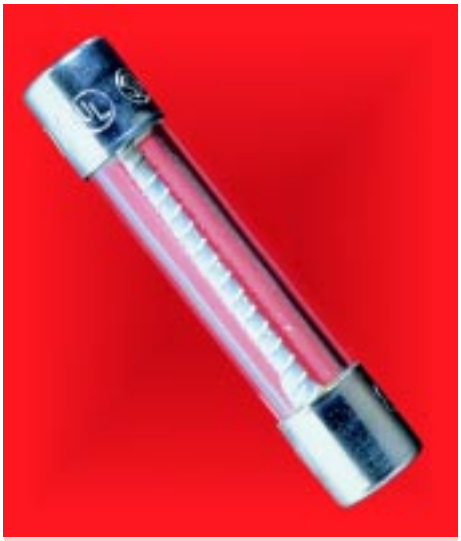

Order Code:	Packing Code + MDL + Rating
Type:	Time Delay
Size:	6.3 x 32mm
Construction:	Glass Tube, electro-plated end caps
Ratings:	63mA to 30A
Rated Voltage:	63mA to 8A - 250V ac 9A to 30A - 32V ac
Packing:	5's and 10's

Agency Approvals:

Design Standard UL248-14

Dimensions (mm):

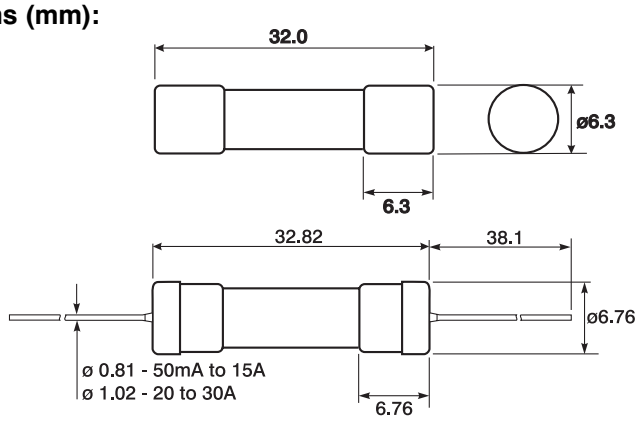

Notes on Characteristic figures in the table below.

1. Breaking capacity was measured at 0.7 - 0.8 power factor on AC.
2. Voltage drop was measured at 25 deg. C ± 3 deg. C ambient temperature at rated current.
3. I^2t was measured at listed breaking capacity and rated voltage.
4. Breaking capacity for MDL 62.5mA to 8A @ 125V ac is 10,000A. Breaking capacity listed corresponds to maximum rated voltage.
5. Other available ratings - 10mA, 31.25mA, 150mA, 175mA, 400mA, 600mA, 700mA, 800mA 1.2A, 1.6A, 1.8A, 2.8A, 3.2A, 3.5A, 6.25A, 7.5A, 12A.
6. 1 to 10A UL recognised for 125V DC and 500A breaking capacity. Other DC ratings are self certified.

Performance Data

Rated Current	Rated Voltage (V)	Breaking Capacity [1]	Pre-arcing I^2t (A^2 sec)	Typical Operating [3] I^2t (A^2 sec)	Typical Voltage Drop [2] Volts at Rated Current	Agency Approvals		
	ac (max)	ac	ac	ac		UL		
63mA	250V	35A	.21	.51	5.56	♦		♦
100mA			.04	.11	2.02	♦		♦
125mA			.05	.06	1.68	♦		♦
190mA			.08	.52	1.12	♦		♦
200mA			.08	.68	1.00	♦		♦
250mA			.43	.96	1.02	♦		♦
300mA			.41	1.13	1.48	♦		♦
375mA			.72	1.86	0.85	♦		♦
500mA			1.48	2.52	1.26	♦		♦
750mA			3.75	5.11	1.01	♦		♦
1A			10	12.65	0.98	♦		♦
1.25A		100A	11	21.40	0.77	♦		♦
1.5A			19	30.90	0.74	♦		♦
2A			68	79.70	0.59	♦		♦
2.25A			55	78.20	0.27	♦		♦
2.5A			63	77.10	0.42	♦		
3A			43	68.60	0.35	♦		♦
4A		200A	181	203.50	0.20	♦		♦
5A			311	374.00	0.19	♦		♦
6A			368	427.50	0.17	♦		♦
7A			457	507.60	0.15	♦		♦
8A			280	455.20	0.12	♦		♦
9A	32V	1000A	568	685.00	0.14		♦	
10A			671	874.00	0.12		♦	
15A			1931	2296.00	0.14		♦	
20A			5652	5992.00	0.05		♦	
25A			15356	15789.00	0.07		♦	
30A			28033	28499.00	0.07		♦	

MDQ and MDQ-V (Axial Leads)

Agency Approvals:

Design Sprecification UL248.14

Dimensions (mm):

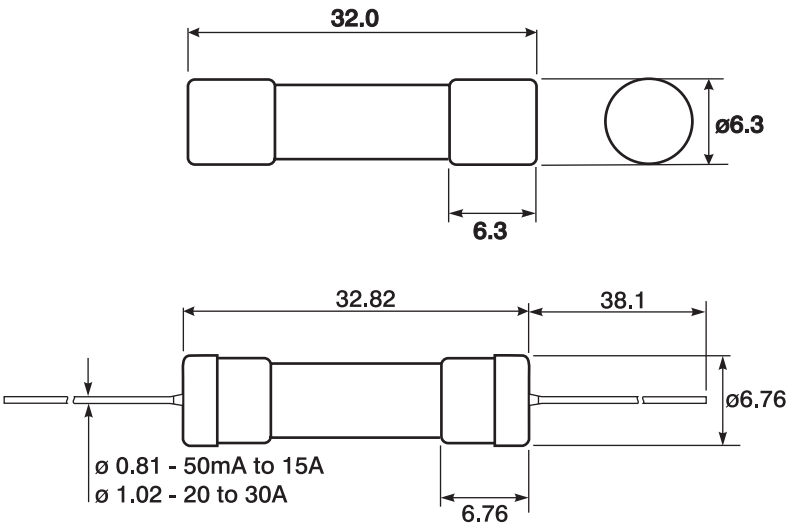



Order Code:	Packing Code + MDQ + Rating
Type:	Dual Element, Time Delay
Size:	6.3 x 32mm
Construction:	Glass tube, electro-plated brass end caps
Ratings:	10mA to 1.6A
Rated Voltage:	10mA to 7A - 250V ac 7.5A to 30A - 32V ac
Packing:	5's & 100's (BK/)
Fuse Holders:	HTB, HB series and series 8000 fuse blocks

Performance Data

Rating	Voltage			Rating	Voltage			
10mA	250V	♦	♦	1.8A	250V	♦		♦
32mA		♦	♦	2A		♦		♦
63mA		♦	♦	2.25A		♦		♦
100mA		♦	♦	2.5A		♦		♦
125mA		♦	♦	2.8A		♦		♦
150mA		♦	♦	3A		♦		♦
175mA		♦	♦	3.2A		♦		♦
190mA		♦	♦	4A		♦		♦
200mA		♦	♦	5A		♦		♦
250mA		♦	♦	6A		♦		♦
300mA		♦	♦	6.25A		♦		♦
375mA		♦	♦	7A		♦		♦
400mA		♦	♦	7.5A	32V		♦	♦
500mA		♦	♦	8A			♦	♦
600mA		♦	♦	9A			♦	♦
750mA		♦	♦	10A			♦	♦
800mA		♦	♦	12A			♦	♦
1A		♦	♦	15A			♦	♦
1.2A		♦	♦	20A			♦	♦
1.25A		♦	♦	25A			♦	♦
1.5A		♦	♦	30A			♦	♦
1.6A		♦	♦					

MDA and MDA-V (Axial Leads)



Order Code:	Packing Code + MDA + Rating
Type:	Time Delay
Size:	6.3 x 32mm
Construction:	Ceramic Tube with electro-plated brass end caps
Ratings:	200mA to 30A
Rated Voltage:	250V ac
Packing:	5's and 100's (BK/)

Agency Approvals:

Design Specification UL248-14

Dimensions (mm):

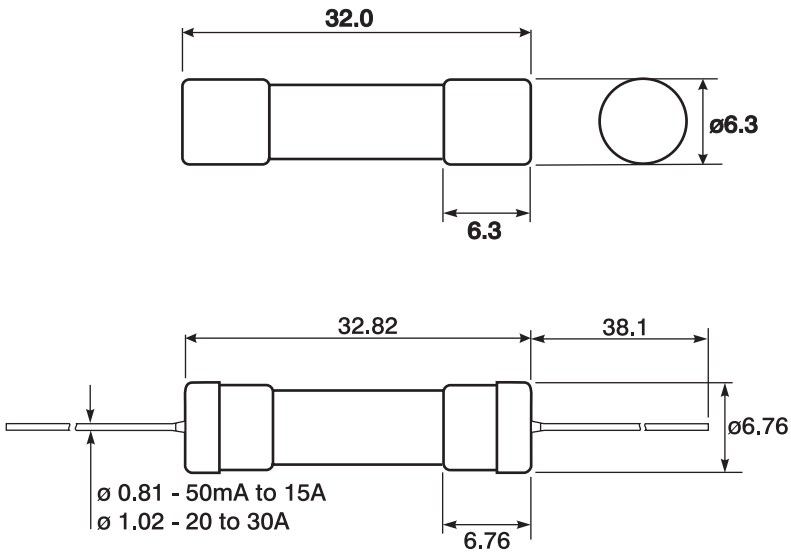

Performance Data

Notes on Performance Data.

1. Breaking capacity was measured at 0.7 - 0.8 power factor on AC.
2. Voltage drop was measured at 25 deg. C ± 3 deg. C ambient temperature at rated current.
3. I^2t was measured at listed breaking capacity and rated voltage.
4. Breaking capacity for MDA 31.25mA to 15A @ 125V ac is 10,000A. Breaking capacity listed corresponds to maximum rated voltage.
5. Other available ratings - 31.25mA, 62.5mA, 100mA, 125mA, 150mA, 300mA, 400mA, 600mA, 800mA, 1.25A, 1.6A, 2.8A, 3.2A, 4.5A, 6.25A, 12A.
6. All DC ratings are self-certified.

Rated Current	Rated Voltage (V)	Breaking Capacity 1,4	Pre-arcing I^2t (A^2 sec)	Typical Operating 3 I^2t (A^2 sec)	Typical Voltage Drop 2 Volts at Rated Current	Agency Approvals	
	ac (max)	ac	ac	ac		UL	SA
200mA	250V	35A	.44	.2♦	1.7♦	♦	♦
250mA			.50	.70	3.41	♦	♦
500mA			1.♦7	2.25	1.51	♦	♦
750mA			5.21	♦.♦0	1.02	♦	♦
1A			10	12	0.9♦	♦	♦
1.5A		100A	24	30	0.70	♦	♦
2A			3♦	73	0.5♦	♦	♦
2.5A			27	3♦	0.23	♦	♦
3A			35	144	0.22	♦	♦
4A		200A	141	1♦5	0.1♦	♦	♦
5A			310	3♦♦	0.17	♦	♦
6A			534	5♦7	0.1♦	♦	♦
7A			591	3♦4	0.15	♦	♦
8A			♦9♦	90♦	0.13	♦	♦
10A			♦43	924	0.12	♦	♦
15A		1500A	23♦	359	0.13	♦	♦
20A		400A	5♦2	7♦1	0.13	♦	
25A		1000A	1097	1410	0.13		
30A		1000A	15♦5	20♦4	0.14		

TDC11

Agency Approvals: There are no agency approvals for this fuse.

Breaking Capacity: 10 times rated current

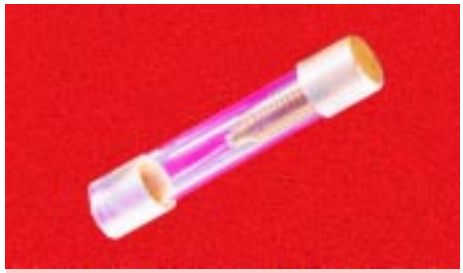

Order Code:	TDC11 + Rating
Type:	Time Delay
Size:	6.3 x 32mm
Construction:	Glass Tube, electro plated brass end caps
Ratings:	50mA to 10A
Packing:	100's & 1000's
Fuse Holders:	HTB, HB, HHB, HFB and Series 8000 fuse

Rating	Rated Voltage V ac	Rating	Rated Voltage V ac
50mA	1000	1A	350
60mA		1.5A	250
100mA		2A	
150mA		3A	
250mA		5A	
500mA	750	7A	150
750mA	500	10A	100

Dimensions (mm):

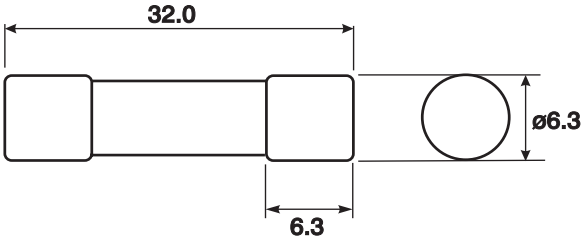

Performance Data:

Rated Current	2 I_n		10 I_n	
Total Operating Time	Min	Max	Min	Max
	-	10 Seconds	20 m/seconds	70 m/seconds

Breaking Capacity: 50A @ rated voltage

C436

Order Code:	C436 + Rating
Type:	Time Delay
Size:	6.3 x 32mm
Construction:	Glass Tube, electro plated brass end caps
Ratings:	800mA, 1A, 1.25A, 1.6A, 2A, 2.5A, 3.15A, 4A, 5A, 6.3A
Rated Voltage:	250V ac

ATC



Order Code:	ATC + Rating
Type:	Fast Acting
Ratings:	1A to 40A
Rated Voltage:	32V

Agency Approvals: 3 to 40A

Dimensions (mm):

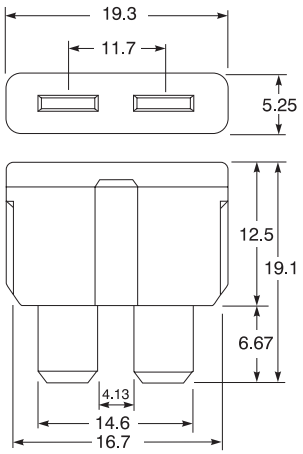

Ratings and Colour Codes

Rating (A)	Colour Code	Rating (A)	Colour Code
1	Black	10	Red
2	Grey	15	Blue
3	Violet	20	Yellow
4	Pink	25	Clear
5	Tan	30	Green
7.5	Brown	40	Amber

ATM



Order Code:	ATM + Rating
Type:	Fast Acting
Ratings:	2A to 30A
Rated Voltage:	32V dc

Agency Approvals: 3 to 30A

Dimensions (mm):

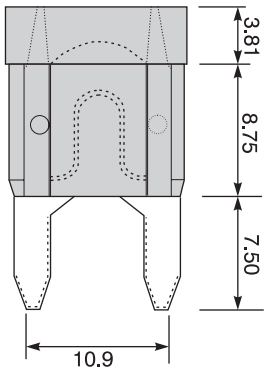

Ratings and Colour Codes

Rating (A)	Colour Code	Rating (A)	Colour Code
2	Grey	10	Red
3	Violet	15	Light Blue
4	Pink	20	Yellow
5	Tan	25	Natural White
7.5	Brown	30	Green

MAX



Order Code:	MAX + Rating
Type:	Time Delay
Ratings :	20A to 60A
Rated Voltage:	32V dc

Dimensions (mm):

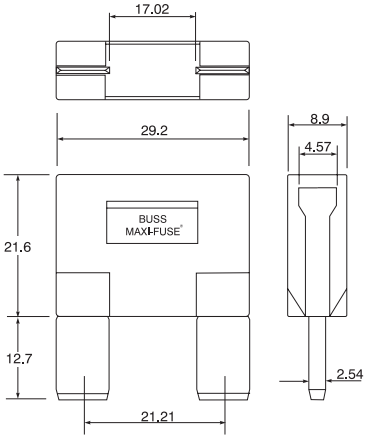

Ratings and Colour Codes

Rating (A)	Colour Code	Rating (A)	Colour Code
20	Yellow	50	Red
30	Green	60	Blue
40	Orange		

AGA and AGA-V (Axial Leads)

Agency Approvals:

UL standard 248-14.

Dimensions (mm):

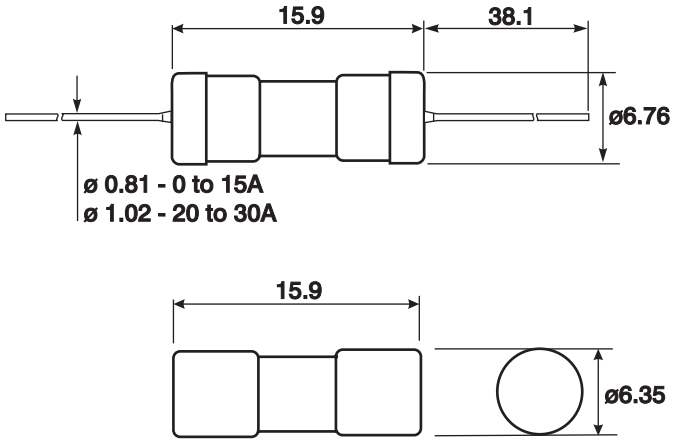



Order Code:	Packing Code + AGA + Rating
Type:	Fast Acting
Size:	6.35 x 15.9mm
Construction:	Glass tube, albaloy coated brass end caps
Ratings:	63mA to 30A
Rated Voltage:	62.5mA to 1.5A - 125V 2A to 30A - 32V ac
Packing:	5's and 100's (BK/)

Rating	Rated Voltage			Rating	Rated Voltage		
63mA	125V ac	♦		2A	32V ac	♦	
100mA		♦		2.5		♦	
125mA		♦		3A			♦
250mA		♦		5A			♦
375mA		♦		6A			♦
500mA		♦		7A			♦
600mA		♦		7.5A			♦
750mA		♦		10A			♦
1A		♦		15A			♦
1.5A		♦		20A			♦
				25A			♦
				30A			♦

AGX and AGX-V (Axial Leads)



Order Code: Packing Code + AGX + Rating

Type: Fast Acting

Size: 6.4 x 25.4mm

Construction: Glass tube, albaloy coated brass end caps

Ratings: 2mA to 30A

Packing: 5's and 100's (BK/)

Agency Approvals:

UL standard 248-14

Dimensions (mm):

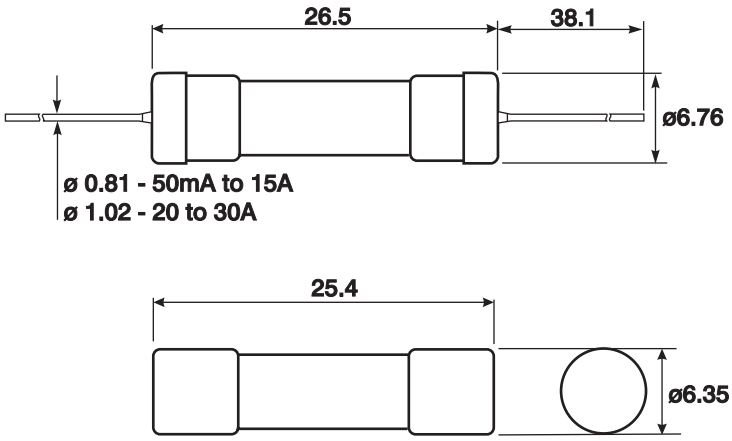

Rating	Rated Voltage	UL		SA	Rating	Rated Voltage	UL		SA
2mA	250V ac	♦		♦	1.25A	250V ac	♦		♦
5mA		♦		♦	1.5A		♦		♦
10mA		♦		♦	2A		♦		♦
32mA		♦		♦	2.5A	125V ac	♦		♦
63mA		♦		♦	3A		♦		♦
100mA		♦		♦	4A		♦		♦
125mA		♦		♦	5A		♦		♦
190mA		♦		♦	6A	32V ac		♦	♦
200mA		♦		♦	7A			♦	♦
250mA		♦		♦	8A			♦	♦
300mA		♦		♦	10A			♦	♦
375mA		♦		♦	15A			♦	♦
400mA		♦		♦	20A			♦	♦
500mA		♦		♦	25A				♦
750mA		♦		♦	30A				♦
1A		♦		♦					

GLD and GBA

Agency Approvals:

Complies with UL standard 248-14

Type **GLD** has an electro-plated pin for positive electrical signal circuit activation.

Type **GBA** has a red pin for high visibility.



Order Code:	GLD or GBA + Rating
Type:	Fast Acting, pin indicating fuse.
Size:	6.3 x 31.8mm
Construction:	Fibre tube, electro plated brass end caps
Ratings:	500mA, 750mA,1A, 1.5A, 2A, 3A, 4A, 5A, 6A, 10A, 12A, 15A
Rated Voltage:	125V ac

Dimensions (mm):

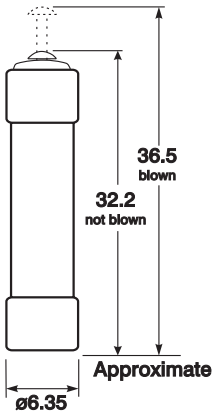

TDC17 (C17)



Order Code:	TDC17- + Rating
Type:	Fast Acting, high breaking capacity
Construction:	Ceramic cartridge, silvered end caps
Ratings (A):	1, 2, 3, 5
Rated Voltage:	250V ac
Packing:	10's, 100's, 1000's

Agency Approvals: Conforms to BS646

For use in plugs and socket outlet adaptors to BS546

Dimensions (mm): 5 x 19

Breaking Capacity: 1000A at 0.6 lagging power factor - 250V

Rating (A)	Colour Code	Max. mV drop @ I_n
1	Green	500
2	Yellow	300
3	Black	235
5	Red	160

TDC180 (C180)



Order Code:	TDC180 + Rating or C180 + Rating
Type:	Fast Acting
Construction:	Ceramic cartridge, silvered end caps
Ratings (A):	1, 2, 3, 5, 7, 10, 13
Rated Voltage:	240V ac
Packing:	10's, 100's and 1000's

Agency Approvals:

The British Standard plug top fuse carries ASTA accreditation for 2 to 13A, all fuses comply with BS1362 and carry the BSI Kite Mark.

Dimensions (mm): 6.4 x 25.4

Breaking Capacity: 6000A/250V @ 0.3 - 0.4 p.f.

Rating (A)	Colour Code	Rating (A)	Colour Code
1	Black	7	Black
2	Black	10	Black
3	Red	13	Brown
5	Black		

HTC-200M

For 5mm diameter fuses, tape and fanfold packed. Contacts - tin plated bronze. Ammo packed 1000's

Dimensions (mm)

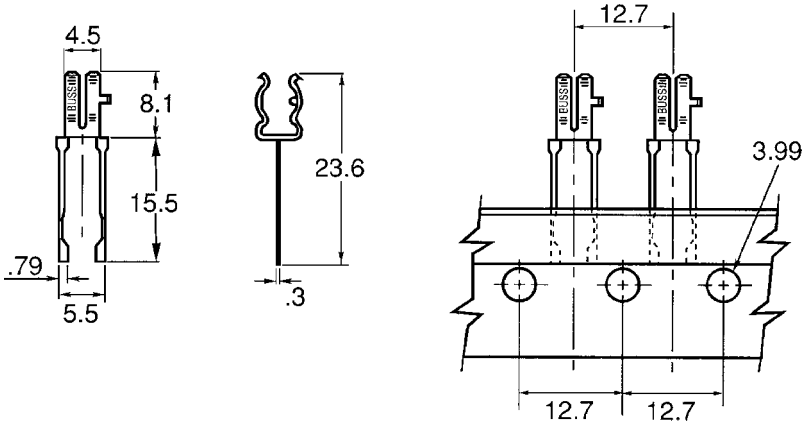

HTC-210M

PC Board mounted fuse clips with end stops, for 5mm fuses.

Dimensions (mm)

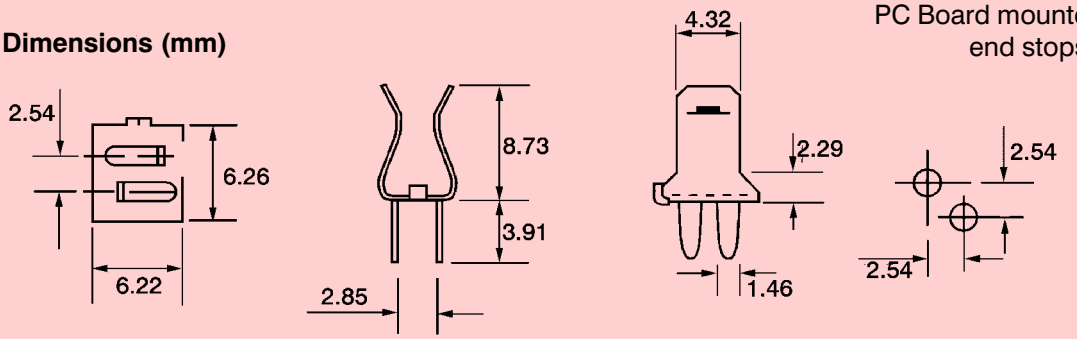

1A3399

Fuse Clips with end stops and straight leads.

Catalogue Number	Clip Material*	Finish
1A3399-01	Beryllium Copper	Silver
1A3399-04	Beryllium Copper	Bright Tin
1A3399-10	Spring Bronze	Bright Tin

* Beryllium Copper recommended for currents higher than 15 amps.

Dimensions (mm)

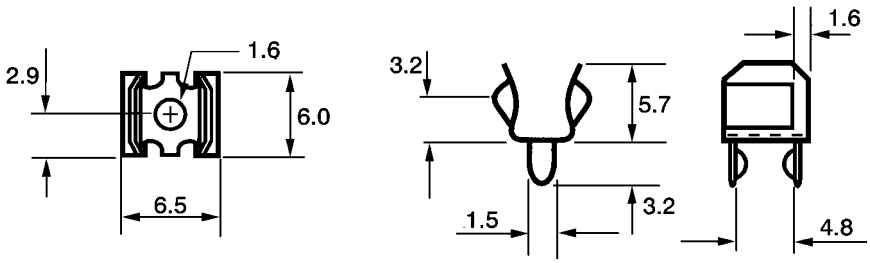

1A5018

Fuse Clips with end stops and straight leads.

High Profile

Catalogue Number	Clip Material*	Finish
1A5018-7	Spring Bronze	Silver
1A5018-10	Spring Bronze	Bright Tin

* Beryllium Copper recommended for currents higher than 15 amps.

Dimensions (mm)

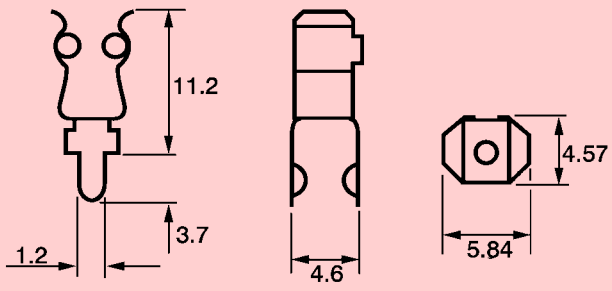

1A5601

Fuse Clips for currents up to 7A.

Dimensions (mm)

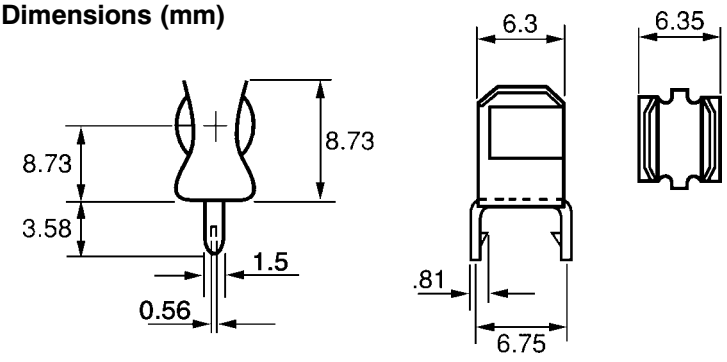

Catalogue Number	Clip Material	Finish
1A5601	Brass	Bright Tin

1A5602

Fuse Clips for currents up to 7A.

Dimensions (mm)

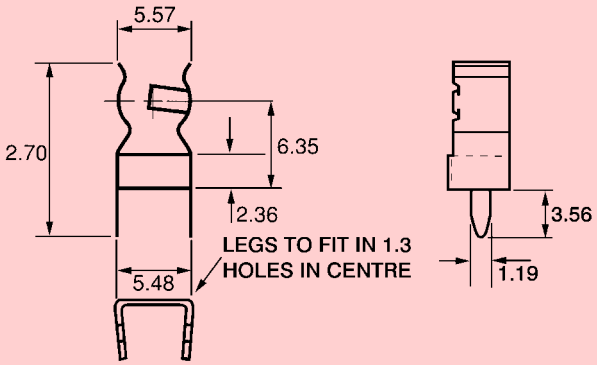

Catalogue Number	Clip Material	Finish
1A5602	Brass	Bright Tin

1A3398

Fuse Clips without end stops, with straight leads.

Catalogue Number	Clip Material*	Finish
1A3398-07	Spring Bronze	Bright Tin

* Beryllium Copper recommended for currents higher than 15A.

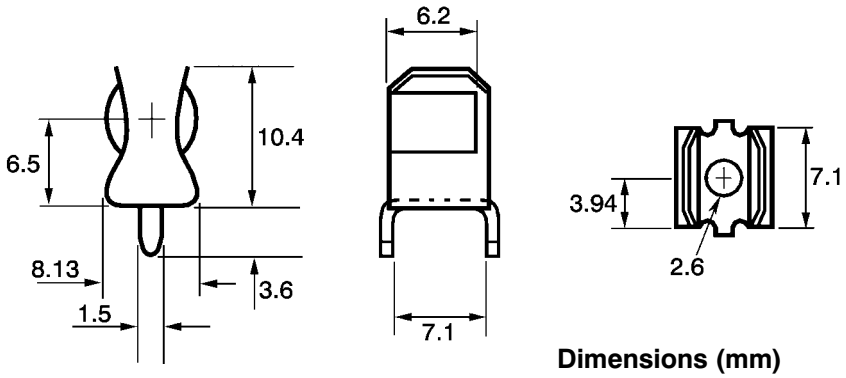

Dimensions (mm)

1A4533

Fuse Clips without end stops, with angled out leads.

Dimensions (mm)

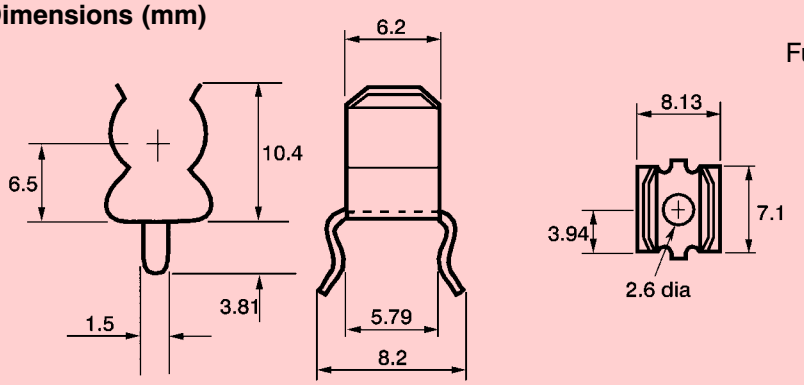

Catalogue Number	Clip Material*	Finish
1A4533-01	Beryllium Copper	Bright Tin
1A4533-06	Spring Bronze	Bright Tin

* Beryllium Copper recommended for currents higher than 15A.

1A1907

Fuse Clips with end stops and straight leads.

Catalogue Number	Clip Material*	Finish
1A1907-03	Beryllium Copper	Bright Tin
1A1907-02	Spring Bronze	None/Bright Dipped
1A1907-05	Beryllium Copper	Silver
1A1907-06	Spring Bronze	Bright Tin

* Beryllium Copper recommended for currents higher than 15A.

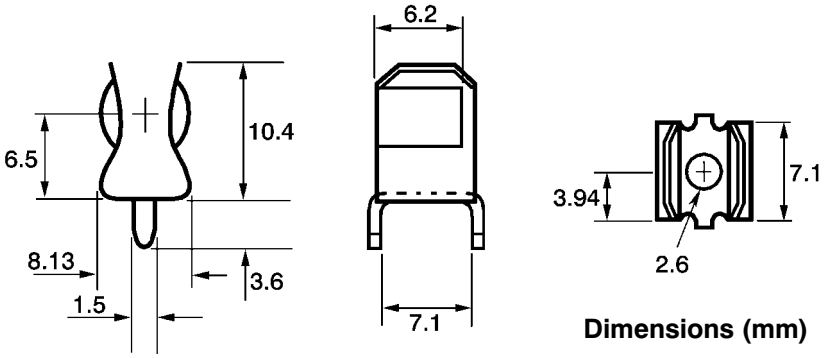

Dimensions (mm)

1A1119

Fuse Clips with end stops and angled-in leads.

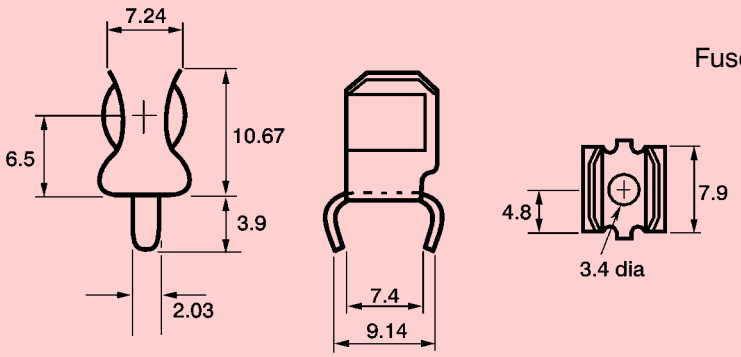

Dimensions (mm)

Catalogue Number	Clip Material*	Finish
1A1119-04	Beryllium Copper	Bright Tin
1A1119-05	Beryllium Copper	Silver
1A1119-10	Spring Bronze	Bright Tin

* Beryllium Copper recommended for currents higher than 15A.

1A4534

Fuse Clips with end stops and angled-out leads. For 6.3mm dia. fuses.

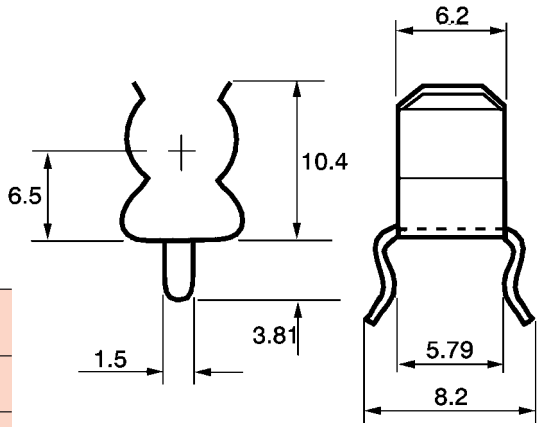

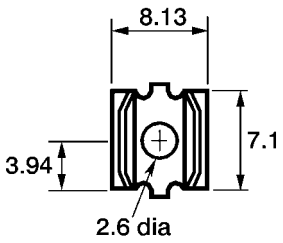

Dimensions (mm)

Catalogue Number	Clip Material*	Finish
1A4534-01	Beryllium Copper	Bright Tin
1A4534-06	Spring Bronze	Bright Tin

* Beryllium Copper recommended for currents higher than 15A.

1A1120

Fuse Clips without end stops, angled-in leads. For 6.3mm dia. fuses.

Dimensions (mm)

Catalogue Number	Clip Material*	Finish
1A1120-02	Spring Bronze	None/ Bright Dipped
1A1120-05	Beryllium Copper	Silver
1A1120-06	Beryllium Copper	Bright Tin
1A1120-09	Spring Bronze	Bright Tin

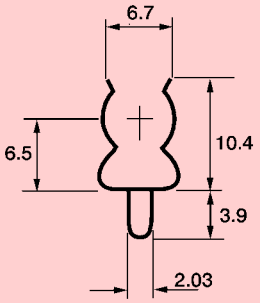

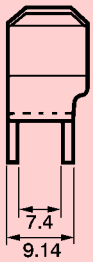

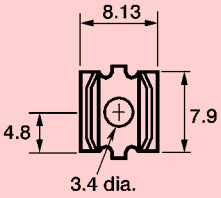

* Beryllium Copper recommended for currents higher than 15A.

5681 and 5682

Fuse clips with mounting holes for 6.35mm dia. fuses.

Figure 1

All dimensions in mm

Catalogue Reference	End Stop	Clip Material	Finish	B (to end stop)	C (contact)	D (Height)	E (Width)	Hole Dia.	Fig. Ref.
5681-01	No	BeCu	Silver	3.56	6.73	10.4	8.13	3.35	2
5681-08		Spg. Br.	Nickel						
5681-15		Spg. Br.	Bright Tin						
5682-01	Yes	BeCu	Silver						
5682-02		BeCu	Silver	3.3	6.6	10.4	8.13	3.35	1
5682-11		BeCu	Bright Tin						
5682-41		Spg. Br.	Bright Tin	3.56					
5682-44		Spg. Br.	Bright Tin	3.3					

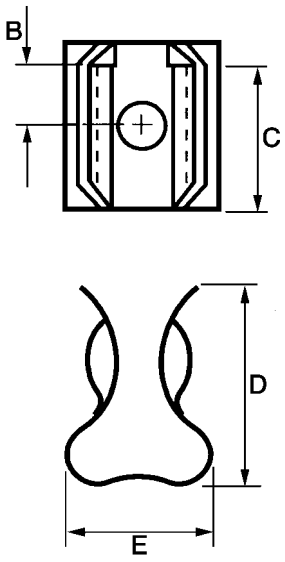

Notes
BeCu = Beryllium Copper
Spg. Br. = Spring Bronze

5956 and 5960

Fuse clips with mounting holes for 10.3mm fuses.

Figure 2

All dimensions in mm

Catalogue Reference	End Stop	Clip Material	Finish	B (to end stop)	C (contact)	D (Height)	E (Width)	Hole Dia.	Fig. Ref.
5956-16	No	Spg. Br.	Bright Tin	-	7.8	18.0	11.9	4.4	2
5960-07	Yes	BeCu	Silver	4.3	9.72	18.0	11.9	5.0	1
5960-09		BeCu	Silver	5.08				4.4	
5960-23		BeCu	Albaloy	4.3				5.0	
5960-44		Spg. Br.	Nickel	5.08				5.0	
5960-51		Spg. Br.	Bright Dip	4.3				5.0	
5960-53		Spg. Br.	Bright Dip	5.08				4.4	
5960-61		Spg. Br.	Bright Tin	4.3				5.0	
5960-62		Spg. Br.	Bright Tin	4.3				3.4	
5960-63		Spg. Br.	Bright Tin	5.08				4.4	
5960-64		Spg. Br.	Bright Tin	5.08				3.25	

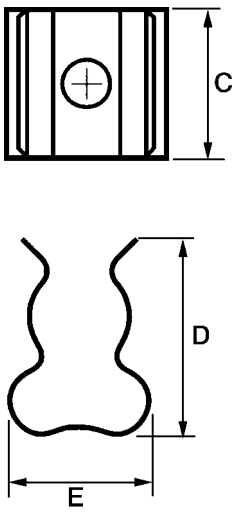

Notes
BeCu = Beryllium Copper
Spg. Br. = Spring Bronze

1A5600

Fuse clips for ATC® Fuses (0 - 20A).

Catalogue Number	Clip Material	Finish
1A5600	Brass	Satin Finish Tin

Dimensions (mm)

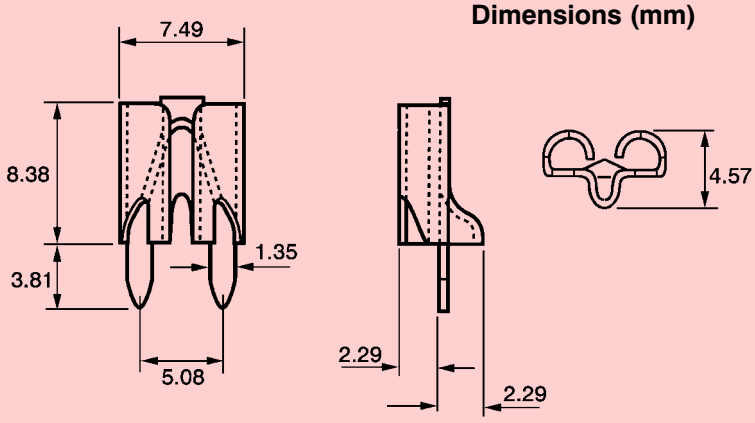

1A5778

PCB fuse clip for ATM fuse, made from nickel plated brass. Packed and sold in 1000's only.

Dimensions (mm)

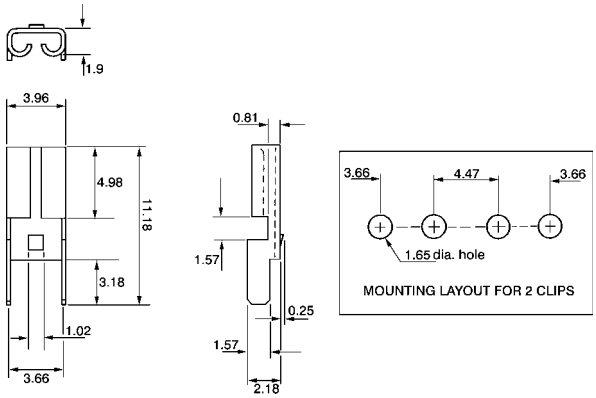

1A5779

Fuse clip for ATM automotive fuse, made from nickel plated brass, base material glass filled nylon. Current rating 15A, voltage 500V ac.

Dimensions (mm)

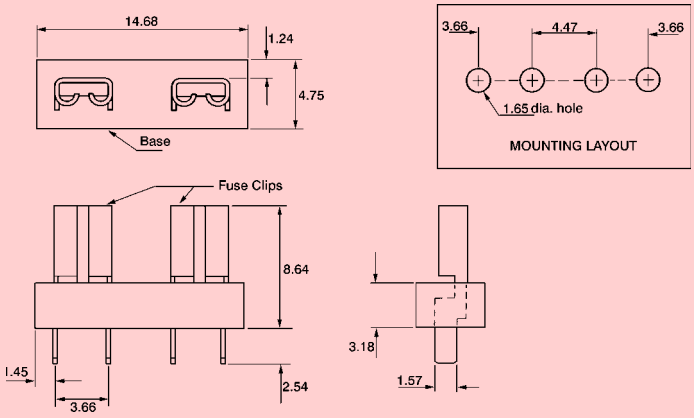

1A5780

Fuse clip for ATC automotive fuses, made of nickel plated brass with glassed filled nylon base. Current rating 15A, voltage 500V ac.

Dimensions (mm)

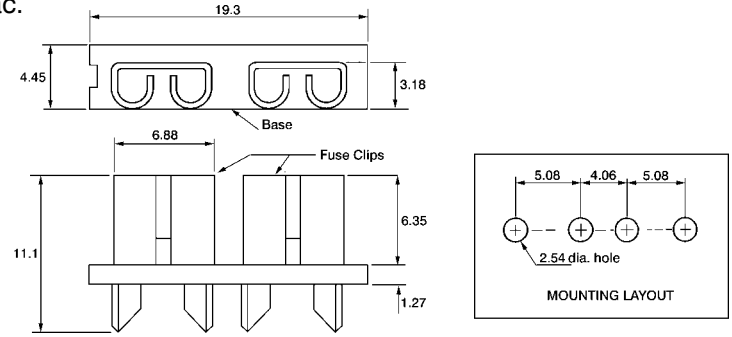

HTC Series

HTC-45M - PCB Vertical Mount for 5 x 20mm fuses

HTC-50M - PCB Horizontal Mount for 5 x 20mm fuses

Dimensions (mm):

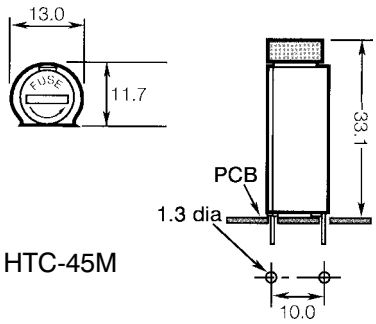

HTC-45M

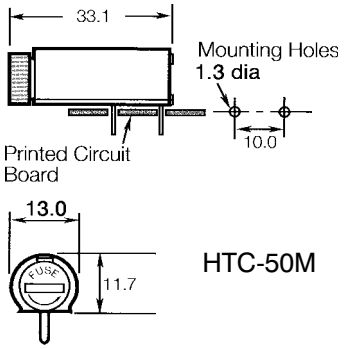

HTC-50M

Specification:	250V ac, 6.3A, 2.5W, Bayonet Cap/Carrier.
Terminals:	Tin Plated
Moulded Materials:	High temperature thermoplastic that meets the flammability ratings of UL 94VO; glow wire test at 960 degrees C per IEC 695-2-1.
Solderability:	In accordance with IEC 68-2-20
Electrical:	Contact resistance - ≤ 10mΩ Insulation resistance - ≥ 10MΩ Dielectric strength - ≥ 2000V
Shock Safety:	PC2 (fuse holders)
Agency Approvals:	UL recognised, CSA Certified, Semko.
Packaging:	Standard quantity - 10 (no prefix); Bulk quantity - 100 (prefix catalogue number BK).

HTC-60M, HTC-65M for 5 x 20mm fuse links

PC Board mount, 250V ac 6.3A

Dimensions (mm)

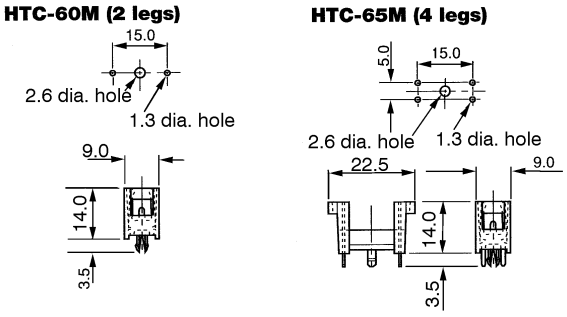



Order Code:	HTC-60M (2 legs) HTC-65M (4 legs)
Rating (A):	6.3
Rated Voltage:	250V ac
Packing:	10's, 100's

HTC-15M, HTC-140M, HTC-150M for 5 x 20mm fuse links

PCB Fuse block and snap-on cover

Dimensions (mm)

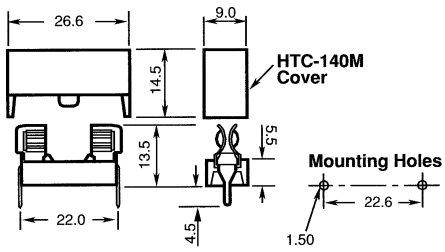

Order Code:	HTC-15M, HTC-140M and HTC-150M
Type:	PCB Fuse block & snap-on cover.
Rating (A):	6.3
Rated Voltage:	250V ac
Packing:	10's, 100's

Further details of all these products can be found on Data sheet number 2110 available from our Application Engineers

HTC Series



Order Code: HTC-30M
Type: Screwdriver Slot
Ratings: 6.3A, 2.5W



Order Code: HTC-35M
Type: Threaded Cap
Ratings: 6.3A, 2.5W



Order Code: HTC-40M
Type: Screwdriver Slot
Ratings: 6.3A, 2.5W



Order Code: HTC-55M
Type: Bayonet Cap/Carrier
Ratings: 6.3A, 2.5W



Order Code: HTC-70M
Type: Bayonet Cap/Carrier
Ratings: 10A, 2.5W

Specifications: for 5 x 20mm fuse links

Terminals : Brass, tin plated

Moulded Materials : High temperature thermoplastic that meets the flammability rating of UL94VO; glow wire test 960 degrees Centigrade per IEC 695-2-1.

Solderability: in accordance with IEC 68-2-20

Agency Approvals: (SEMKO not HTC30)

Electrical: Contact Resistance - 10mΩ;
Insulation Resistance - ≥ 10MΩ;
Dielectric Strength - ≥ 2000V

Rated Voltage: 250V ac

Shock Safety: PC2 (fuse holders).

Packaging: Standard quantity 10 (no prefix), Bulk quantity 100 (prefix BK in catalogue number).

Dimensions (mm)

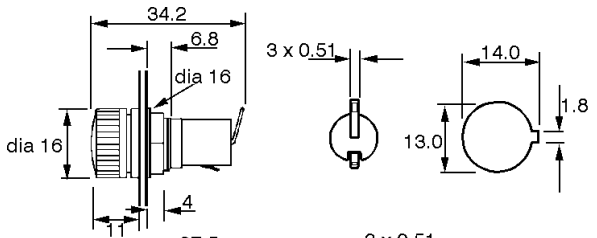

HTC-30M

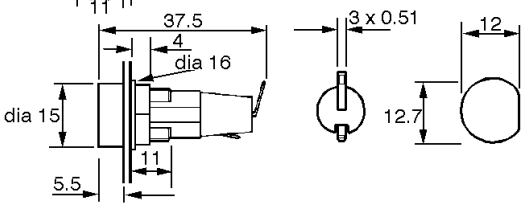

HTC-35M

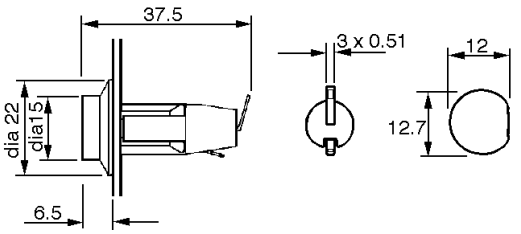

HTC-40M

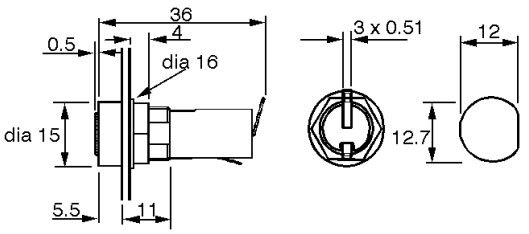

HTC-55M

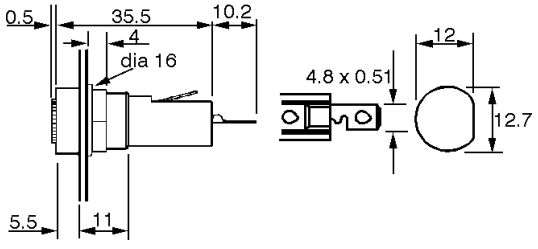

HTC-70M

HBH-I and HBH-M

Horizontal Mount HBH-I for 6.35 x 31.75mm fuses

Horizontal Mount HBH-M for 5 x 20mm fuses



Agency Approvals:

Dimensions(mm):

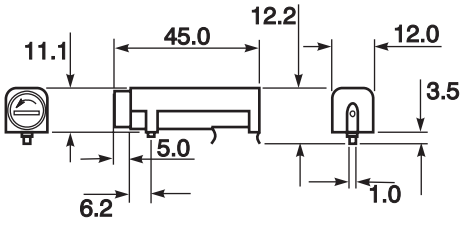

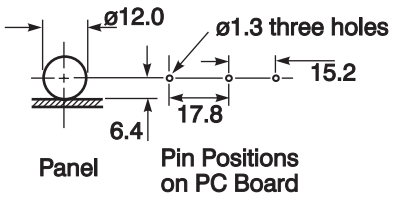

HBV

Vertical Mount with Stability Pins

HBV-I for 6.35 x 31.75mm fuses, HBV-M for 5 x 20mm fuses



Agency Approvals:

Stability pins are integral to the holder body giving additional stability to holders for wave soldering, reducing stress on the contact pins.

Dimensions(mm):

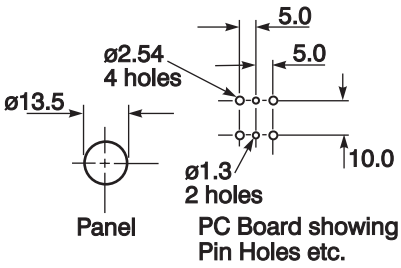

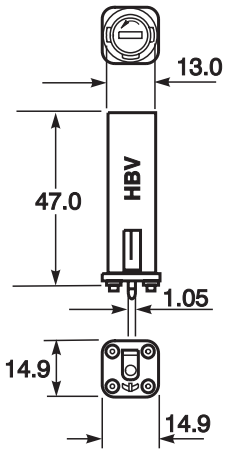

HBW

Vertical Mount without Stability Pins

HBW-I for 6.35 x 31.75mm fuse, HBW-M for 5 x 20mm fuse



Agency Approvals:

Dimensions (mm):

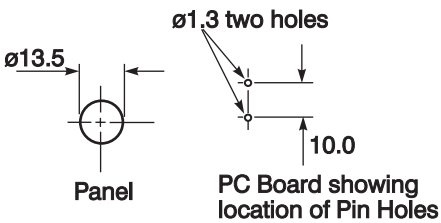

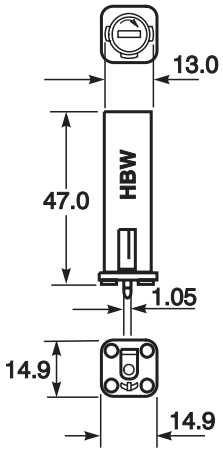

HKP Series for 6.35 x 31.2 fuse links



Order Code: HKP, HKP-L, HKP-W, HKP-CC
Type: Standard Fuse Holders
Rating: 30A
Rated Voltage: 250V ac
Packing: 100's

Agency Approvals:

Order Codes: HKP - standard fuse holder
HKP-L - with 2250V stand-off barrier
HKP-W - with drip proof knob.
HKP-CC - with .094mm shorter body (not shown)

Dimensions (mm):

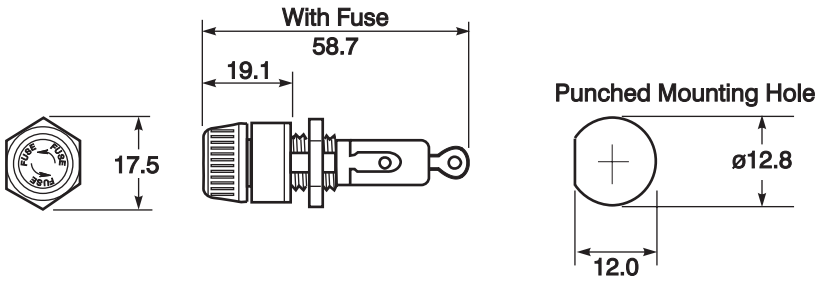



Order Code: HKP-BBHH, HKP-HH, HKP-LW-HH
Type: Fuse Holders with 6.35mm quick connects
Rating: 15A
Rated Voltage: 250V ac
Packing: 100's

Agency Approvals:

Order Codes: HKP-BBHH - standard fuse holder with 6.35mm quick connects, nut and washer assembly.
HKP-HH - standard fuse holder with 6.35mm quick connect.
HKP-LW-HH - standard fuse holder with drip proof knob, 2250V stand-off barrier and quick connects.

Dimensions (mm):

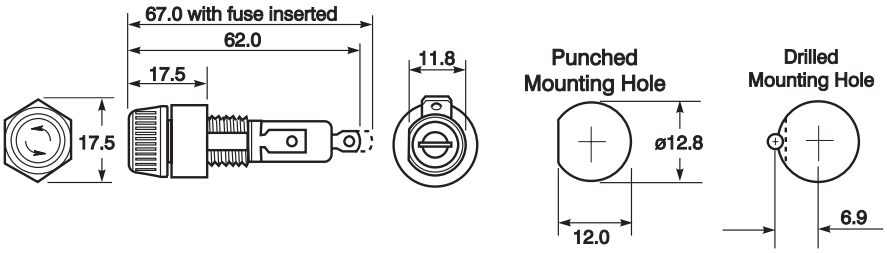



Order Code: HKP-OO
Type: Snap-lock fuse holder
Rating: 30A
Rated Voltage: 250V ac
Packing: 100's

Agency Approvals:

Order Code: HPK-OO - standard fuse holder with snap lock.

Dimensions(mm):

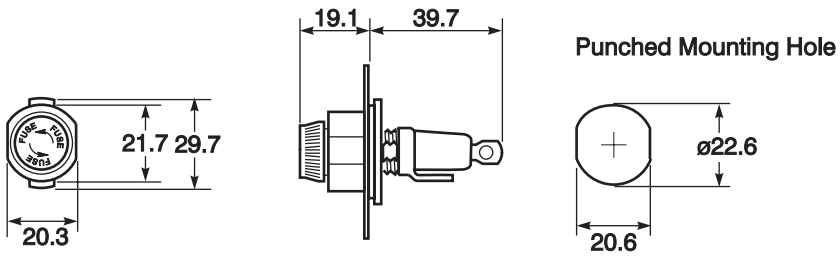

HTB Series

Agency Approvals:



Finger Grip Carrier

For 6.35 x 31.2mm and 5 x 20mm fuse links

Electrical Data:

Insulation resistance to IEC257, 10,000 ohms @ 500V dc; contact resistance to IEC257, 0.005 ohms maximum @ 1A; stand-off voltage as IEC257, 480V mil @ 3.175mm thickness.

Mounting:

Maximum thickness of mounting panel 7.62mm

See over the page for order code information.

	Common dimensional data: length (finger grip) - 42.9mm plus in-line terminal (screwdriver slotted) 44.5mm	Max. Panel Thickness	Terminal Options				Carrier Options			
			Solder/4.8mm Quick Connect		6.35 Quick Connect		6.35 x 31.75		5 x 20	
			In-line	Right Angle	In-line	Right Angle	Finger Grip	Screw-driver	Finger Grip	Screw-driver
KNOB TYPE CARRIER	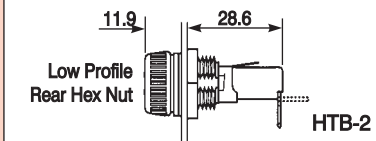	7.62	HTB-22I	HTB-24I	HTB-26I	HTB-28I	✓	☒	☒	☒
			HTB-22M	HTB-24M	HTB-26M	HTB-38M	☒	☒	✓	☒
	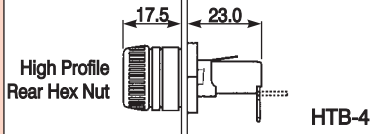	3.175	HTB-42I	HTB-44I	HTB-46I	HTB-48I	✓	☒	☒	☒
			HTB-42M	HTB-44M	HTB-46M	HTB-48M	☒	☒	✓	☒
	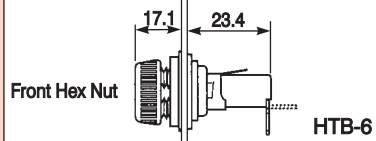	7.62	HTB-62I	HTB-64I	HTB-66I	HTB-68I	✓	☒	☒	☒
			HTB-62M	HTB-64M	HTB-66M	HTB-68M	☒	☒	✓	☒
	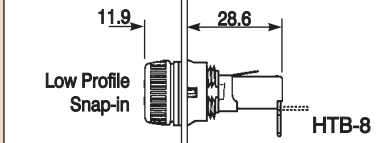	3.175	HTB-82I	HTB-84I	HTB-86I	HTB-88I	✓	☒	☒	☒
			HTB-82M	HTB-84M	HTB-86M	HTB-88M	☒	☒	✓	☒
SCREWDRIVER SLOT	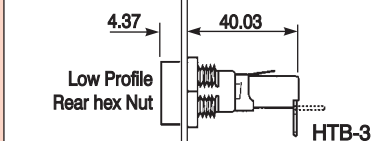	7.62	HTB-32I	HTB-34I	HTB-36I	HTB-38I	☒	✓	☒	☒
			HTB-32M	HTB-34M	HTB-36M	HTB-38M	☒	☒	☒	✓
	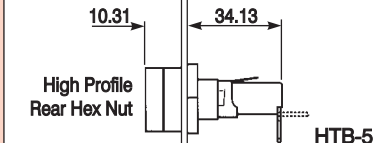	3.175	HTB-52I	HTB-54I	HTB-56I	HTB-58I	☒	✓	☒	☒
			HTB-52M	HTB-54M	HTB-56M	HTB-58M	☒	☒	☒	✓
	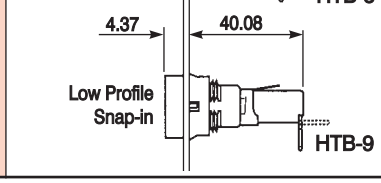	3.175	HTB-92I	HTB-94I	HTB-96I	HTB-98I	☒	✓	☒	☒
			HTB-92M	HTB-94M	HTB-96M	HTB-98M	☒	☒	☒	✓

HTB Series



Screwdriver Slotted Carrier

Fuse carriers can be order separately -

BK/ = Bulk Packed.

FT = Knob type for 20, 40, 60 and 80 series.

ST = Screwdriver slotted for 30, 50 and 90 series only.

I = 6.35 x 31.75mm

M = 5 x 20mm

PACKAGING
- Left Blank standard pack
- BK/ Bulk Pack

PRODUCT CODE
HTB

BODY STYLE AND MOUNTING

FINGER GRIP HOLDERS
- 2 Low Profile rear panel hex nut
- 4 High Profile
- 6 Front panel hex nut*
- 8 Low Profile - snap-in

SCREWDRIVER SLOTTED HOLDERS
- 3 Low Profile
- 5 High Profile
- 9 Low Profile snap-in

REAR TERMINAL CONFIGURATION
- 2 Solder 4.8 Quick Connect in-line
- 4 Solder 4.8 Quick Connect right angle
- 6 Solder 6.35 Quick Connect in-line
- 8 Solder 6.35 Quick Connect right angle

FUSE CARRIER SIZE
- I 6.35 x 31.75 millimetres
- M 5 x 20 millimetres

SPLASH PROOF
S P

Optional on 2, 4, 6 and 8

All letter and figures in 'red' could form part of the ordering code.

* Profile varies with panel thickness. Holder installs through rear of panel.

A typical order code would be
BK/HTB24MSP

HHB

Universal In-Line Fuse Holder for 6.35 x 22.2, 25.4 and 31.75mm, fuses supplied without leads as standard.



Order Code:	HHB or BK/HHB
Material:	Body - nylon, contact plated copper
Rating:	32A
Rated Voltage:	30V ac
Packing:	Standard pack - 10's Bulk Pack (BK/)- 100's

Variations

Holder with pre-attached lead wires -

Wire Colour	482.6mm length	203.2mm length
Yellow	BK/HHB-Y419	BK/HHB-Y408
Red	BK/HHB-R419	BK/HHB-R408
Black	BK/HHB-B419	BK/HHB-B408

Dimensions (mm):

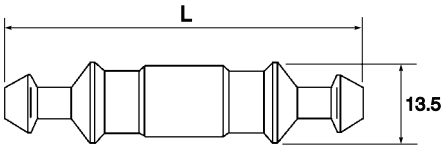

L = 53.34 max with 22.2mm fuse fitted

L = 57.15 max with 25.4mm fuse fitted

L = 61.50 max with 31.75mm fuse fitted

HFB

Waterproof In-Line Fuse Holder for 6.35 x 31.75mm fuses. Suitable for outdoor use in harsh environments. Material will withstand many organic solvents.



Order Code:	HFB
Material:	Body - Thermoplastic rubber, contacts - plated copper
Rating:	30A
Rated Voltage:	32V ac
Packing:	Standard - 10's Bulk (BK/) - 20's

Dimensions (mm):

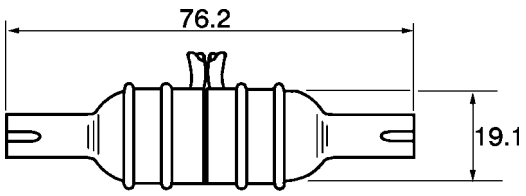

HHC and HHD



Order Code:	HHC or HHD
Type:	In-line fuse holders for ATC® blade type fuses
Rating:	3A to 30A
Rated Voltage:	32V dc

Types Available:

HHC = Yellow fuse holder, to take 3 - 20A fuse, supplied with 1.31mm² black wire

HHD = Black fuse holder, to take 3 - 30A fuse, supplied with 3.31mm² yellow wire

HHD-C = Cover for both of the above fuse holders.

Dimensions:

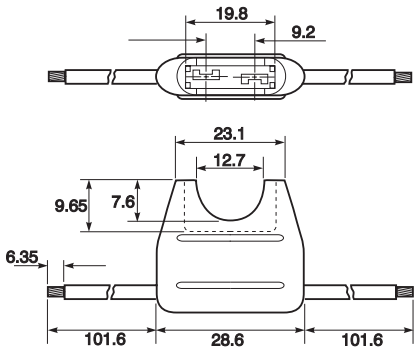



Order Code:	HHL or HHM
Type:	In-line fuse holder for MINI® fuses
Rating:	30A
Rated Voltage:	32V dc

HHL and HHM

Types Available:

HHL = Fuse holder with cover for 2 - 20A fuses, supplied with 1.31mm² 101.6mm length of wire.

HHM = Fuse holder with cover for 2 - 30A fuses, supplied with 3.31mm² 101.6mm length of wire.

Bodies and covers can be ordered separately.



Order Code:	HHX
Type:	In-line fuse holder for MAXI™ fuses
Rating:	60A
Rated Voltage:	32V dc

HHX

Types Available:

HHX = Fuse holder with cover for 20 - 60A fuses, supplied with 13.3mm², 127mm long lead wire.

Bodies and covers can be supplied separately

8000 Series

Agency Approvals:

Fuse blocks for mounting 6.35 x 31.75 fuses, available in screw mount or snap-in mount format. Can be used as single pole or ganged up to 12 pole.



Order Code: Packing Code + S + Item Code + Number of Poles

Rating: Up to 30A max. depending on type of terminals

Rated Voltage: 300V ac

Packing: 10's, 100's & 1000's (BK/)

Type Variations for Bolt-in Mounting.

Part Number	Series	Terminal	Angle in degrees	Poles (suffix)
S-8001	8000	Solder	0	1 to 12
S-8002			40	
S-8101	8100	4.76mm Quick Connect	0	
S-8102			40	
S-8201	8200	6.35mm Quick Connect	0	
S-8202			40	
S-8203			Side	
S-8301	8300	Screw	-	

Type variations for Snap-in Mounting.

Part Number	Series	Terminal	Angle in degrees
S-8001-1-SNP	8000	Solder	0
S-8002-1-SNP			40
S-8101-1-SNP	8100	4.76mm Quick Connect	0
S-8102-1-SNP			40
S-8201-1-SNP	8200	6.35mm Quick Connect	0
S-8202-1-SNP			Side

Dimensions (mm)

Single Pole Bolt-in Mounting

Code Ref.
S8002
S8102
S8202

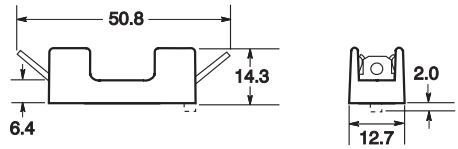

S8001
S8101
S8201

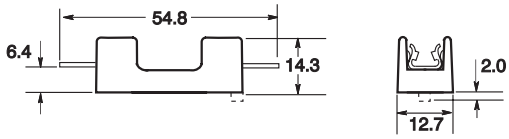

S8301

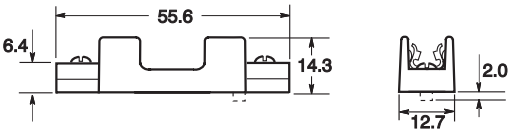

S8203

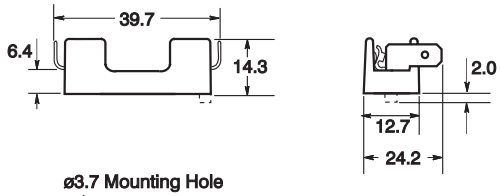

Single Pole Snap-in Mounting

Code Ref.
S8002-1-SNP
S8102-1-SNP

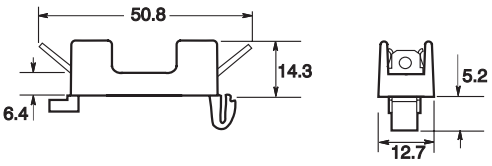

S8001-1-SNP
S8101-1-SNP
S8201-1-SNP

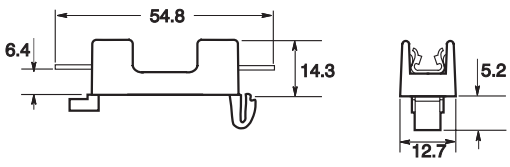

S8203-1-SNP

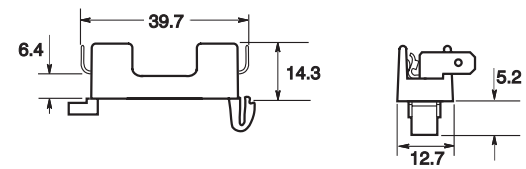

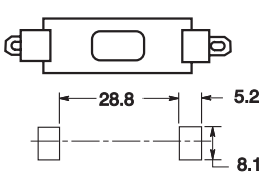

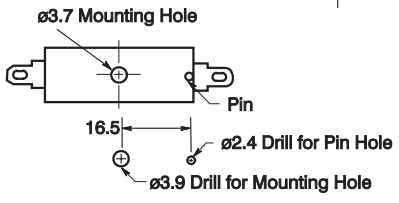

4405 and 4406



Order Code:	4405 or 4406
Rating:	30A
Rated Voltage:	250V ac

Fuse block for 6.35 x 31.75mm fuses. The base width is 12.7mm.

Reference 4405 has parallel solder terminals and reference 4406 has side solder terminals (at right angles to the base).

Dimensions (mm):

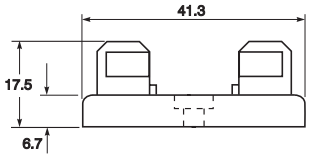

4406

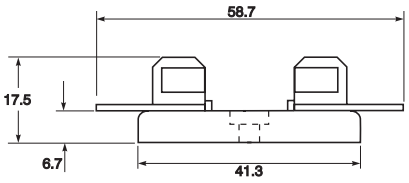

4405

2499



Order Code:	2499
Rating:	15A
Rated Voltage:	250V ac

Agency Approvals:

Fuse block for 6.35 x 31.75mm fuses with side quick-connect 6.35mm terminals.

Dimensions (mm):

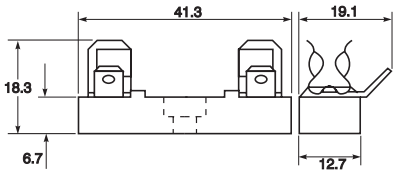

Spare fuse blocks to hold spare fuses, which can be screwed to your base, are available (without any terminals) under order reference 4574.

3828 Series



Fuse block for 6.35 x 25.4mm fuses with parallel solder terminals. Available from 1 pole to 12 pole, order code 3828 + number of poles. Base width is 12.7mm.

Dimensions (mm):

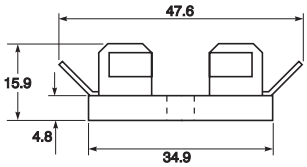

4520 and 4393



Order Code:	4520 or 4393 for spare fuse block
Rating:	30A
Rated Voltage:	250V ac

Single Pole Fuse Block for 6.35 x 25.4mm fuses. Width of base 12.7mm with parallel solder terminals. A spare fuse block for holding spare fuses, mountable on your base, is available, order code 4393.

Dimensions (mm):

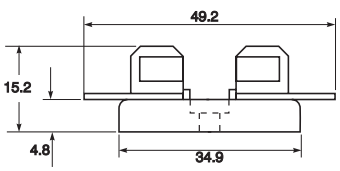

4520

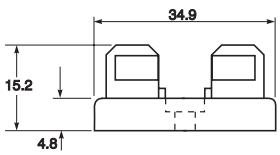

4393

Basic Fuse Technology

Miniature fuses serve two main purposes:

a. To protect components, equipment and people from risk of fire and shock risk caused by overcurrents.

b. To isolate sub systems from the main system once a fault has occurred.

Overcurrents

Overcurrents exist when the normal load for a circuit is exceeded. It can be either an overload or short circuit. An overload is any current flowing within the normal circuit path that is higher than the normal circuit full load current.

A short circuit is an overcurrent which greatly exceeds the normal full load current of the circuit. Components and equipment can be damaged by both types of overcurrents.

Selecting Overcurrent Protection

During normal load current conditions, the fuse must carry the normal load current of the circuit without nuisance opening. However, when an overcurrent occurs the fuse must interrupt the overcurrent and withstand the voltage across the fuse after arcing. To properly select a fuse the following items must be considered:

- Voltage rating (ac or dc voltage)
- Full load currents (RMS Amperes)
- Available short circuit current
- In-rush characteristics
- Characteristics of equipment or components to be protected
- Ambient conditions
- Standards requirements

In addition, consideration must be given to:

- Available board space
- Type of mounting
- Automatic or manual insertion
- Reliability
- Ease of field service.

Electronic circuits frequently exhibit surges, caused by capacitors charging, motors being momentarily stalled, or high voltage components sparking over. It is important that designers take account of these temporary conditions during fuse selection. The ability to resist surges is a function of the fuse design relative to the surge pulse, duration, frequency etc. Comparison of a manufacturer's I^2t value alone is not sufficient and Bussmann would be pleased to advise on specific applications.

Voltage Ratings

The voltage rating of the fuse must be greater than or equal to the circuit voltage. Because the fuse has such low resistance, the voltage rating becomes critical only when the fuse is trying to open. The fuse must be able to open quickly, extinguish the arc after the fuse element has melted and prevent the system open-circuit voltage from re-striking across the open fuse element.

Current Ratings

Each fuse is marked with a nominal current rating.

Several factors can affect the ability of the fuse to carry this rated current. First the base material of the clip in which the fuse is mounted may greatly affect the performance of the fuse.

Another important factor is the conductor size used to connect the fuse to other circuit components. If the conductor is too small, it will generate heat. That extra heat will be seen by the fuse, causing the fuse to open before it should. It is also important that the fuse be installed with clean and tight connections. If the connections are dirty or loose, they will cause increased resistance, generating extra heat. That heat will lead to a shortened fuse life.

Breaking Capacity

A fuse must be able to open the circuit under a short circuit without endangering its surroundings. The breaking capacity of a protective device is the maximum available current, at the rated voltage, that the device can safely open without the possibility of rupturing.

Fuse Resistance

In most applications, the voltage drop across the fuse due to its internal and contact resistances is negligible. There are, however, certain critical applications where the fuse resistance must be considered and it is important that the circuit designer understands the fuse characteristics in order to select the proper fuse.

Physical Sizes

There are numerous physical sizes of electronic fuses, including subminiature fuses. The most common cylindrical designs are 5x20mm and 6.3x32mm.

Subminiature fuses are often used when board space is limited. For applications of this type there are both through-hole and surface mount devices available. Standard package sizes for surface mount fuses are 1608, 3216 & 6125. These sizes are standard throughout the electronic industry. Through-hole axial and radial leaded products allow fuses to be PCB mounted. Standard 5x15mm & 5x20mm fuses fitted with leads can also be mounted in this way.

Our surface mount range will continue to be expanded allowing them to be designed into an even wider range of applications.

Glossary of Terms

Ampere squared seconds I^2t

A measure of heat energy supplied to a circuit while the fuse is clearing a fault. It can be expressed as 'melting I^2t, arcing I^2t or the sum of them 'clearing I^2t'. This is usually used as a measure of short circuit performance.

Arcing time

The amount of time from the instant the fuse link has melted until the overcurrent is interrupted, or cleared.

Clearing time

The total time between the beginning of the overcurrent and the final opening of the circuit at rated voltage by an overcurrent protective device. Clearing time is the total of the melting time and the arcing time.

Fast acting fuse

A fuse which opens on overload and short circuits very quickly. This type of fuse is not designed to withstand temporary overload currents with some electrical loads.

Fuse

An overcurrent protective device with a fusible link that operates and opens the circuit on an overcurrent condition.

Overcurrent

A condition which exists on an electrical circuit when the normal load current is exceeded. Overcurrents take on two separate characteristics - overloads and short circuits.

Overload

Can be classified as an overcurrent which exceeds the normal full load current of a circuit.

Resistive load

An electrical load which is characterised by not having any significant inrush current. When a resistive load is energised, the current rises instantly to its steady state value, without first rising to a higher value.

RMS Current

The R.M.S. (root mean square) value of any periodic current is equal to the value of the direct current which, flowing through a resistance, produces the same heating effect in the resistance as the periodic current does.

Short circuit

Can be classified as an overcurrent which exceeds the normal full load current of a circuit by a factor many times (tens, hundreds or thousands greater).

Time delay fuse

A fuse with a built-in time delay that allows temporary and harmless inrush current to pass without operating, but is so designed to open on sustained overloads and short circuits.

Time lag (surge proof)

A fuse which can withstand short high current pulses and is particularly suitable for television sets, amplifiers etc.

Voltage rating

A maximum open circuit voltage in which a fuse can be used, yet safely interrupt an over-current. Exceeding the voltage rating of a fuse impairs its ability to clear an overload or short circuit safely.

1608FF 3
1A1119 53
1A1120 54
1A1907 53
1A3398 53
1A3399 51
1A3400 54
1A4533 53
1A4534 54
1A5018 51
1A5600 54
1A5601 52
1A5602 52
1A5778 56
1A5779 56
1A5780 56
2499 66
3216LV/3216CP/3216FF 4
3828 Series 66
4393 66
4405 66
4406 66
4520 66
5681 55
5682 55
5956 55
5960 55
6125T 6
8000 Series 65

A

ABC 39
ABC-V 39
AGA 47
AGA-V 47
AGC 38
AGC-V 38
AGX 48
AGX-V 48
ATC 46
ATM 46

C

C387 36
C436 45
C515 12
C517 16
C518 14
C519 12
C520 14

E

EFF 9
ETF 9

F

FWH 40

G

GBA 49
GBB 41
GBB-V 41
GDA 18
GDA-V 18
GDB 20
GDB-V 20
GDC 22, 26
GDC-V 22, 26
GLD 49
GMA 30
GMA-V 30
GMC 32
GMC-V 32
GMD 34
GMD-V 34

H

HBH-I 59
HBH-M 59
HBV 59
HBW 59
HFB 63
HHB 63
HHC 64
HHD 64
HHL 64
HHM 64
HHX 64
HKP Series 60
HTB Series 61
HTC Series
HTC-140M 57
HTC-150M 57
HTC-15M 57
HTC-30M 58
HTC-35M 58
HTC-40M 58
HTC-45M 57
HTC-50M 57
HTC-55M 58
HTC-60M 57
HTC-65M 57
HTC-70M 58
HTC-200M 51
HTC-210M 51

M

MAX 46
MCR 8
MDA 44
MDA-V 44
MDL 42
MDL-V 42
MDQ 43
MDQ-V 43

P

PC-TRON® 11

S

S500 20
S501 18
S504 22
S504-V 22
S505 24
S505-V 24
S506 26
S508 28
SFT 7

T

TDC10 36
TDC11 45
TDC17 (C17) 50
TDC180 (C180) 50

Product Approval Marks

ASTA - Association of Short Circuit Testing Authorities (UK).

BSI - British Standards Institute (UK).

CSA - Canadian Standards Association (Canada)

CSA - Component Acceptance Mark (Canada)

IMQ - Istituto del Marchio di Qualita (Italy)

MITI - Ministry Industrial Testing Institute (Japan).

SEMKO - Svenska Elektriske Materielkontrollanstalten (Sweden)

UL - Underwriters Listed (USA).

Underwriters Recognised (USA).

VDE - Verband Deutscher Elekortechniker (Germany).