TDA7498

100-watt + 100-watt dual BTL class-D audio amplifier

Datasheet - production data

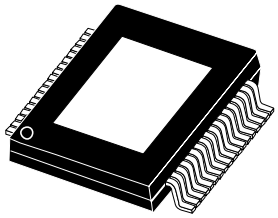

PowerSSO-36
exposed pad up

Features

- 100 W + 100 W output power at THD = 10% with R_L = 6 Ω and V_{CC} = 36 V
- 80 W + 80 W output power at THD = 10% with R_L = 8 Ω and V_{CC} = 34 V
- Wide-range single-supply operation (14 - 39 V)
- High efficiency (η = 90%)
- Four selectable, fixed gain settings of nominally 25.6 dB, 31.6 dB, 35.1 dB and 37.6 dB
- Differential inputs minimize common-mode noise
- Standby and mute features
- Short-circuit protection
- Thermal overload protection
- Externally synchronizable

Description

The TDA7498 is a dual BTL class-D audio amplifier with single power supply designed for home systems and active speaker applications.

It comes in a 36-pin PowerSSO package with exposed pad up (EPU) to facilitate mounting a separate heatsink.

Table 1: Device summary

Order code	Operating temp. range	Package	Packaging
TDA7498	-40 to 85 °C	PowerSSO36 (EPU)	Tube
TDA7498TR	-40 to 85 °C	PowerSSO36 (EPU)	Tape and reel

This is information on a product in full production.

www.st.com

Contents

1 Device block diagram 5

2 Pin description 6

2.1 Pinout 6

2.2 Pin list 7

3 Electrical specifications 8

3.1 Absolute maximum ratings 8

3.2 Thermal data 8

3.3 Recommended operating conditions 8

3.4 Electrical specifications 8

4 Characterization curves 10

4.1 Test circuit 10

4.2 Characterization curves 12

4.2.1 For R_L = 6 Ω 12

4.2.2 For R_L = 8 Ω 14

5 Application information 16

5.1 Application circuit 16

5.2 Mode selection 17

5.3 Gain setting 18

5.4 Input resistance and capacitance 18

5.5 Internal and external clocks 19

5.5.1 Master mode (internal clock) 19

5.5.2 Slave mode (external clock) 19

5.6 Output low-pass filter 20

5.7 Protection functions 21

5.8 Diagnostic output 21

6 Package information 22

6.1 PowerSSO-36 EPU package information 22

7 Revision history 25

List of tables

Table 1: Device summary 1
Table 2: Pin description list 7
Table 3: Absolute maximum ratings 8
Table 4: Thermal data 8
Table 5: Recommended operating conditions 8
Table 6: Electrical specifications 8
Table 7: Mode settings 17
Table 8: Gain settings 18
Table 9: How to set up SYNCLK 19
Table 10: PowerSSO-36 EPU package mechanical data 24
Table 11: Document revision history 25

List of figures

Figure 1: Internal block diagram (showing one channel only) 5
Figure 2: Pin connections (top view, PCB view) 6
Figure 3: Test circuit for characterizations 10
Figure 4: Test board 11
Figure 5: Output power (THD = 10%) vs. supply voltage 12
Figure 6: THD vs. output power 12
Figure 7: THD vs. frequency (1 W) 12
Figure 8: THD vs. frequency (100 mW) 12
Figure 9: Frequency response 13
Figure 10: FFT performance (0 dBFS) 13
Figure 11: FFT performance (-60 dBFS) 13
Figure 12: Output power (THD = 10%) vs. supply voltage 14
Figure 13: THD vs. output power 14
Figure 14: THD vs. frequency (1 W) 14
Figure 15: THD vs. frequency (100 mW) 14
Figure 16: Frequency response 15
Figure 17: FFT performance (0 dB) 15
Figure 18: FFT performance (-60 dB) 15
Figure 19: Application circuit for 6 Ω or 8 Ω speakers 16
Figure 20: Standby and mute circuits 17
Figure 21: Turn on/off sequence for minimizing speaker “pop” 17
Figure 22: Input circuit and frequency response 18
Figure 23: Master and slave connection 19
Figure 24: Typical LC filter for an 8 Ω speaker 20
Figure 25: Typical LC filter for a 6 Ω speaker 20
Figure 26: Behavior of pin DIAG for various protection conditions 21
Figure 27: PowerSSO-36 EPU package outline 23

1 Device block diagram

Figure 1: "Internal block diagram (showing one channel only)" shows the block diagram of one of the two identical channels of the TDA7498.

Figure 1: Internal block diagram (showing one channel only)

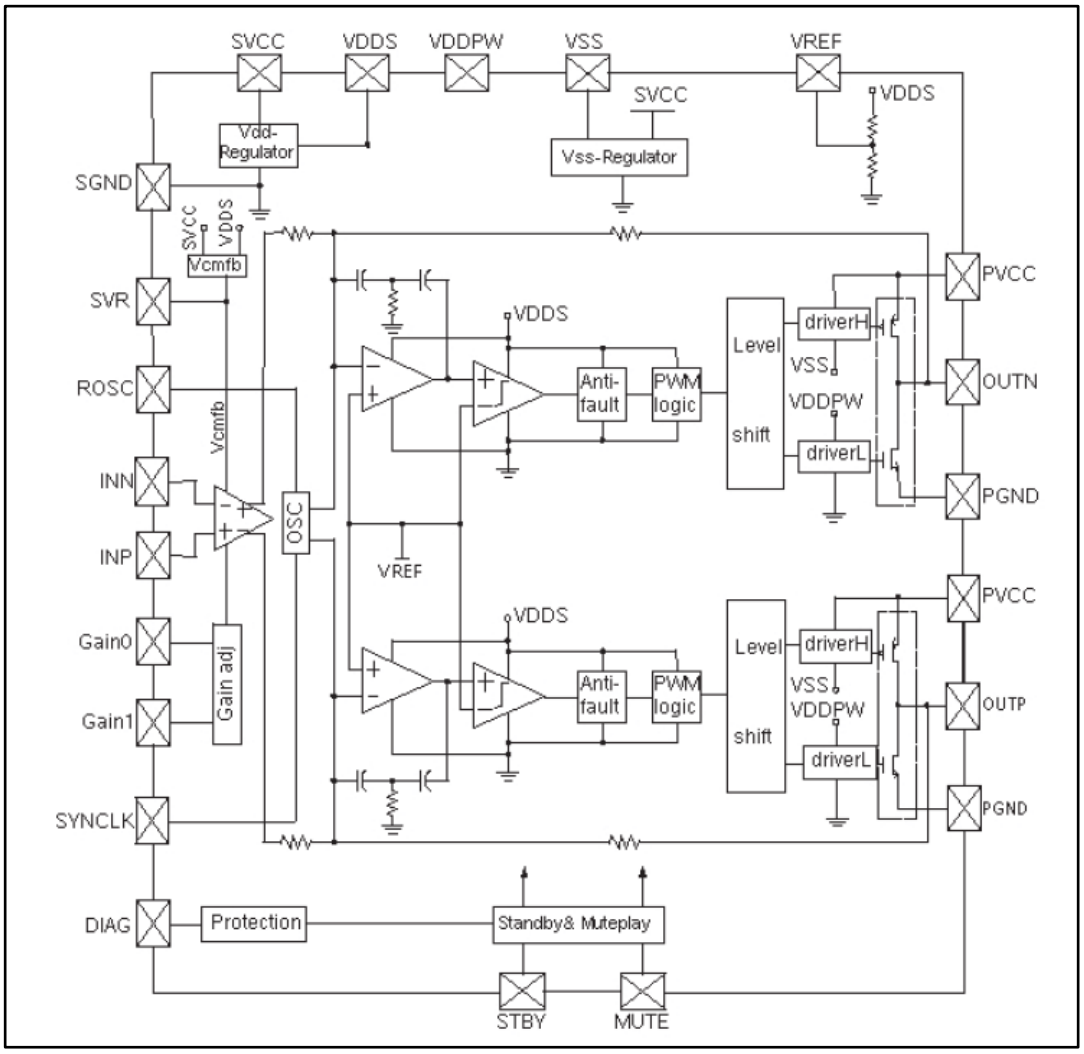

2 Pin description

2.1 Pinout

Figure 2: Pin connections (top view, PCB view)

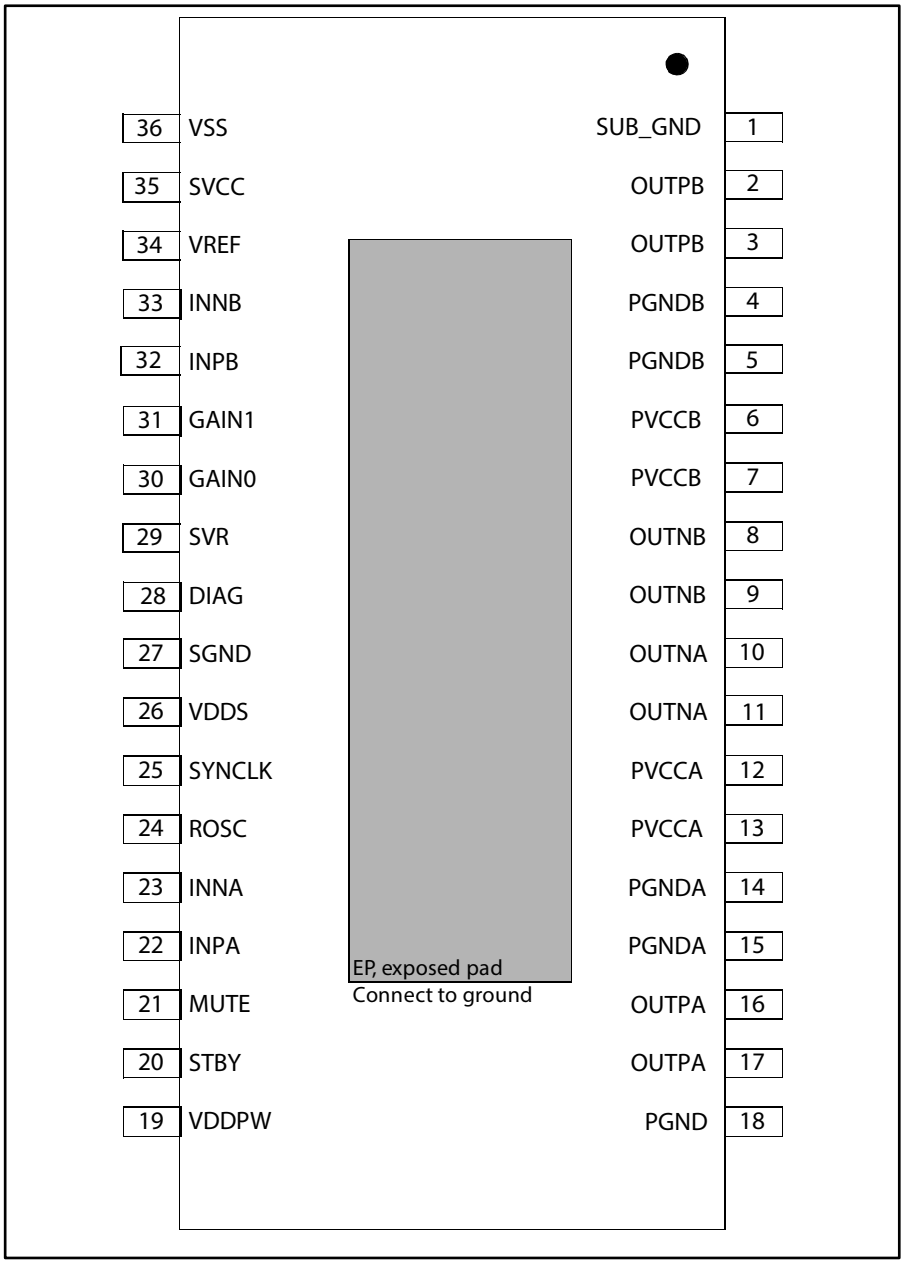

2.2 Pin list

Table 2: Pin description list

Number	Name	Type	Description
1	SUB_GND	PWR	Connect to the frame
2,3	OUTPB	O	Positive PWM for right channel
4,5	PGNDB	PWR	Power stage ground for right channel
6,7	PVCCB	PWR	Power supply for right channel
8,9	OUTNB	O	Negative PWM output for right channel
10,11	OUTNA	O	Negative PWM output for left channel
12,13	PVCCA	PWR	Power supply for left channel
14,15	PGNDA	PWR	Power stage ground for left channel
16,17	OUTPA	O	Positive PWM output for left channel
18	PGND	PWR	Power stage ground
19	VDDPW	O	3.3-V (nominal) regulator output referred to ground for power stage
20	STBY	I	Standby mode control
21	MUTE	I	Mute mode control
22	INPA	I	Positive differential input of left channel
23	INNA	I	Negative differential input of left channel
24	ROSC	O	Master oscillator frequency-setting pin
25	SYNCLK	I/O	Clock in/out for external oscillator
26	VDDS	O	3.3-V (nominal) regulator output referred to ground for signal blocks
27	SGND	PWR	Signal ground
28	DIAG	O	Open-drain diagnostic output
29	SVR	O	Supply voltage rejection
30	GAIN0	I	Gain setting input 1
31	GAIN1	I	Gain setting input 2
32	INPB	I	Positive differential input of right channel
33	INNB	I	Negative differential input of right channel
34	VREF	O	Half VDDS (nominal) referred to ground
35	SVCC	PWR	Signal power supply
36	VSS	O	3.3-V (nominal) regulator output referred to power supply
-	EP	-	Exposed pad for heatsink, to be connected to ground

3 Electrical specifications

3.1 Absolute maximum ratings

Table 3: Absolute maximum ratings

Symbol	Parameter	Value	Unit
V_{CC}	DC supply voltage for pins PVCCA, PVCCB, SVCC	45	V
VI	Voltage limits for input pins STBY, MUTE, INNA, INPA, INNB, INPB, GAIN0, GAIN1	-0.3 to 3.6	V
T_j	Operating junction temperature	-40 to 150	°C
T_{stg}	Storage temperature	-40 to 150	°C

3.2 Thermal data

Table 4: Thermal data

Symbol	Parameter	Min	Typ	Max	Unit
$R_{th\ j\text{-}case}$	Thermal resistance, junction to case	-	2	3	°C/W

3.3 Recommended operating conditions

Table 5: Recommended operating conditions

Symbol	Parameter	Min	Typ	Max	Unit
V_{CC}	Supply voltage for pins PVCCA, PVCCB, SVCC	14	-	39	V
Tamb	Ambient operating temperature	-40	-	85	°C

3.4 Electrical specifications

Unless otherwise stated, the values in the table below are specified for the conditions:
V_{CC} = 36 V, R_L = 6 Ω, R_{OSC} = R3 = 39 kΩ, C8 = 100 nF, f = 1 kHz, G_V = 25.6 dB
Tamb = 25 °C.

Table 6: Electrical specifications

Symbol	Parameter	Condition	Min	Typ	Max	Unit
I_q	Total quiescent current	No LC filter, no load	-	40	60	mA
I_{qSTBY}	Quiescent current in standby	-	-	1	10	µA
V_{OS}	Output offset voltage	Play mode	-100	-	100	mV
		Mute mode	-60	-	60	
I_{OCP}	Overcurrent protection threshold	R_L = 0 Ω	6	7	-	A
T_j	Junction temperature at thermal shutdown	-	-	150	-	°C
R_i	Input resistance	Differential input	48	60	-	kΩ
V_{OVP}	Overvoltage protection threshold	-	42	43	-	V

Symbol	Parameter	Condition	Min	Typ	Max	Unit
V_{UVP}	Undervoltage protection threshold	-	-	-	8	V
R_{dsON}	Power transistor on-resistance	High side	-	0.2	-	Ω
		Low side	-	0.2	-	
P_o	Output power	THD = 10%	-	100	-	W
		THD = 1%	-	78	-	
P_o	Output power	R_L = 8 Ω, THD = 10%	-	80	-	W
P_D	Dissipated power	P_o = 100 W + 100 W, THD = 10%	-	20	-	W
η	Efficiency	P_o = 100 W + 100 W	-	90	-	%
THD	Total harmonic distortion	P_o = 1 W	-	0.1	-	%
G_V	Closed-loop gain	GAIN0 = L, GAIN1 = L	24.6	25.6	26.6	dB
		GAIN0 = L, GAIN1 = H	30.6	31.6	32.6	
		GAIN0 = H, GAIN1 = L	34.1	35.1	36.1	
		GAIN0 = H, GAIN1 = H	36.6	37.6	38.6	
ΔG_V	Gain matching	-	-1	-	1	dB
C_T	Crosstalk	f = 1 kHz, P_o = 1 W	50	70	-	dB
eN	Total input noise	A Curve, G_V = 20 dB	-	15	-	µV
		f = 22 Hz to 22 kHz	-	25	50	
SVRR	Supply voltage rejection ratio	fr = 100 Hz, Vr = 0.5 Vpp, C_{SVR} = 10 µF	-	70	-	dB
T_r, T_f	Rise and fall times	-	-	50	-	ns
f_{SW}	Switching frequency	Internal oscillator	290	310	330	kHz
f_{SWR}	Output switching frequency range	With internal oscillator (1)	250	-	400	kHz
		With external oscillator (2)	250	-	400	
V_{inH}	Digital input high (H)	-	2.3	-	-	V
V_{inL}	Digital input low (L)		-	-	0.8	
V_{STBY}	Pin STBY voltage high (H)	-	2.7	-	-	V
	Pin STBY voltage low (L)		-	-	0.5	
V_{MUTE}	Pin MUTE voltage high (H)	-	2.5	-	-	V
	Pin MUTE voltage low (L)		-	-	0.8	
A_{MUTE}	Mute attenuation	V_{MUTE} = L, V_{STBY} = H	-	70	-	dB

Notes:

(1) $f_{SW} = 10^6 / ((16 * R_{OSC} + 182) * 4)$ kHz, $f_{SYNCLK} = 2 * f_{SW}$ with R3 = 39 kΩ (see *Figure 19: "Application circuit for 6 Ω or 8 Ω speakers"*).

(2) $f_{SW} = f_{SYNCLK} / 2$ with the external oscillator.

4 Characterization curves

4.1 Test circuit

Figure 3: "Test circuit for characterizations" shows the test circuit with which the characterization curves, shown in the next sections, were measured. *Figure 4: "Test board"* shows the PCB layout.

Figure 3: Test circuit for characterizations

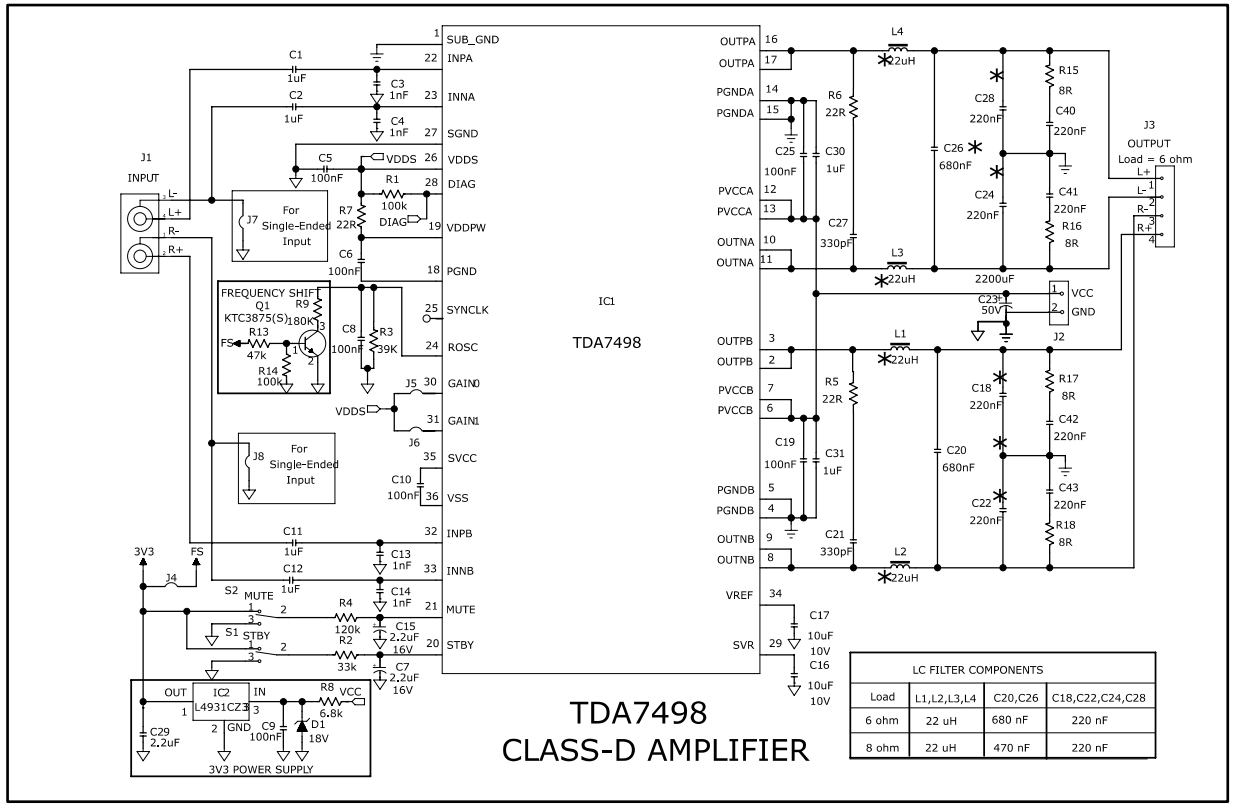

Figure 4: Test board

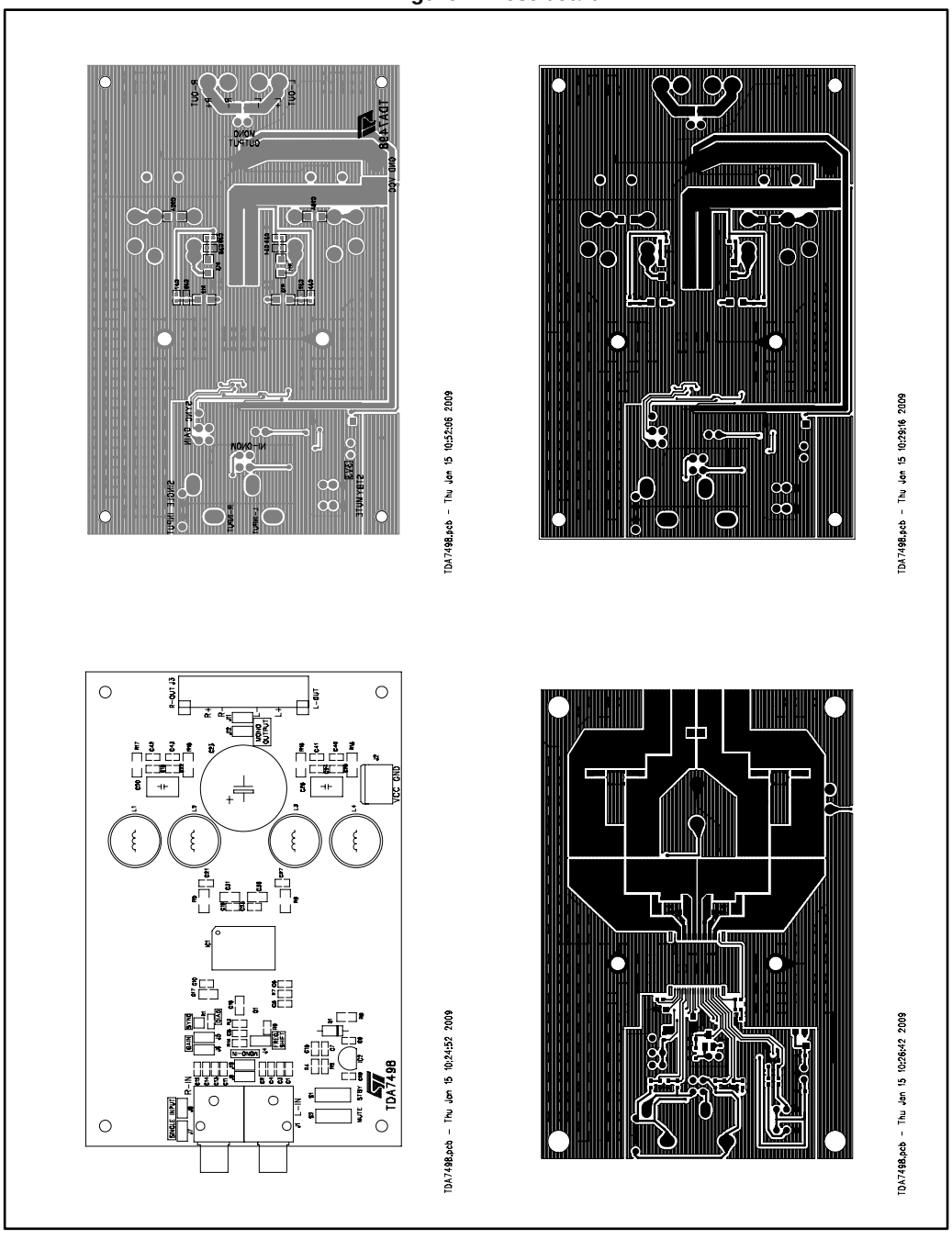

4.2 Characterization curves

Unless otherwise stated the measurements were made under the following conditions:

V_{CC} = 36 V, f = 1 kHz, G_V = 25.6 dB, R_{OSC} = 39 kΩ, C_{OSC} = 100 nF, Tamb = 25 °C

4.2.1 For R_L = 6 Ω

Figure 5: Output power (THD = 10%) vs. supply voltage

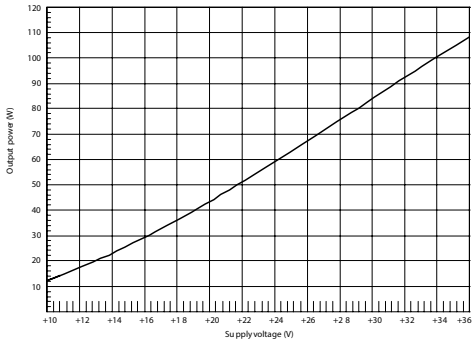

Figure 6: THD vs. output power

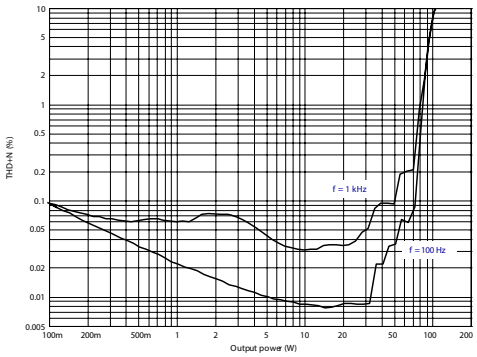

Figure 7: THD vs. frequency (1 W)

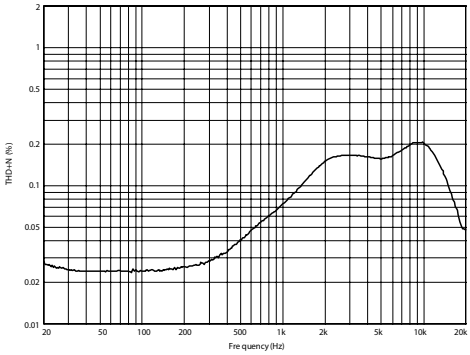

Figure 8: THD vs. frequency (100 mW)

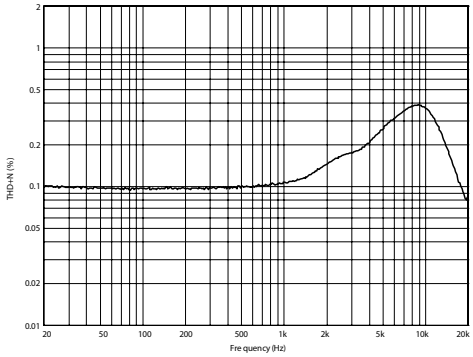

Figure 9: Frequency response

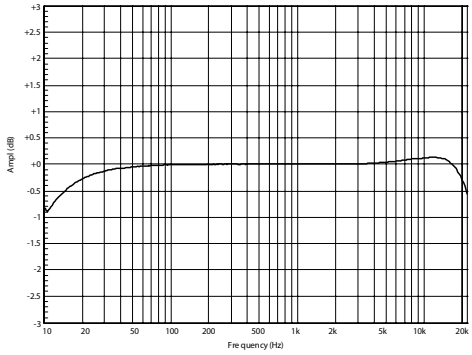

Figure 10: FFT performance (0 dBFS)

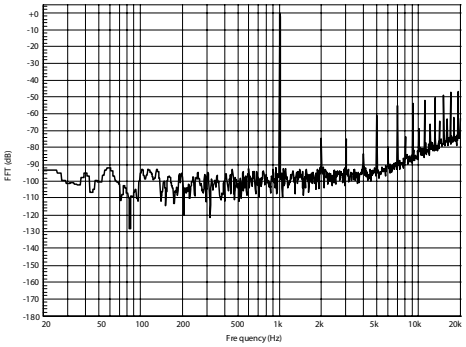

Figure 11: FFT performance (-60 dBFS)

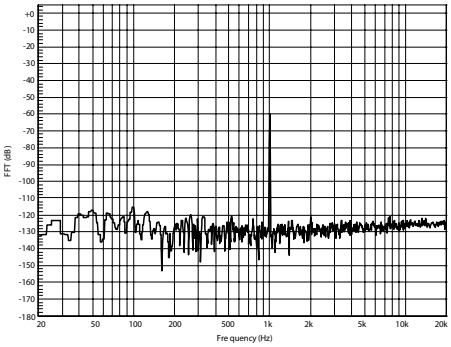

4.2.2 For R_L = 8 Ω

Figure 12: Output power (THD = 10%) vs. supply voltage

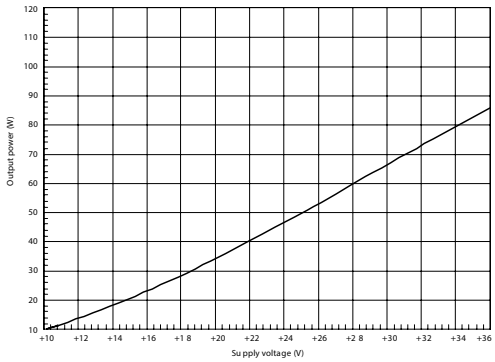

Figure 13: THD vs. output power

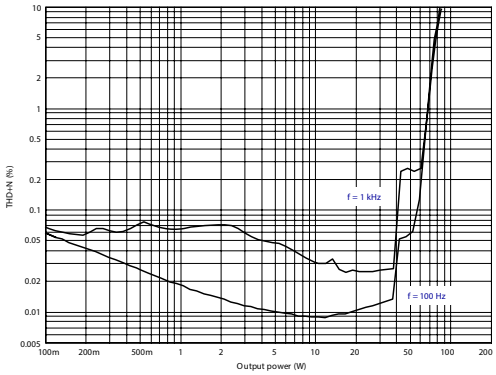

Figure 14: THD vs. frequency (1 W)

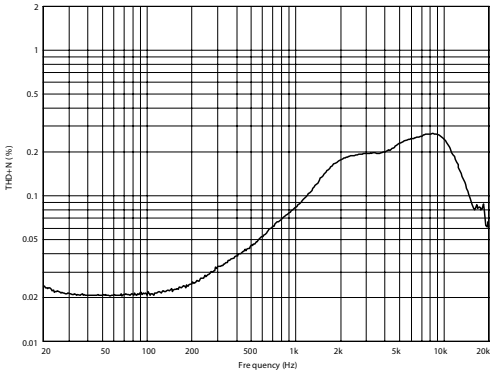

Figure 15: THD vs. frequency (100 mW)

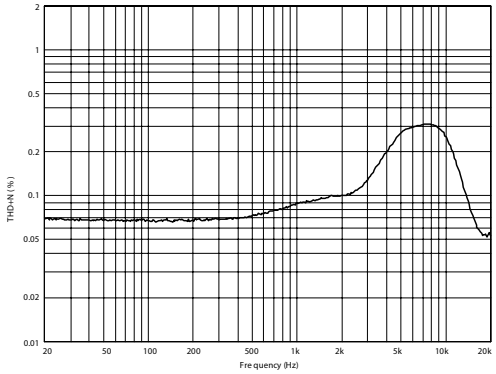

Figure 16: Frequency response

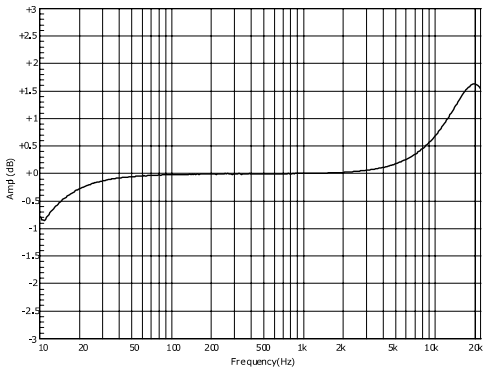

Figure 17: FFT performance (0 dB)

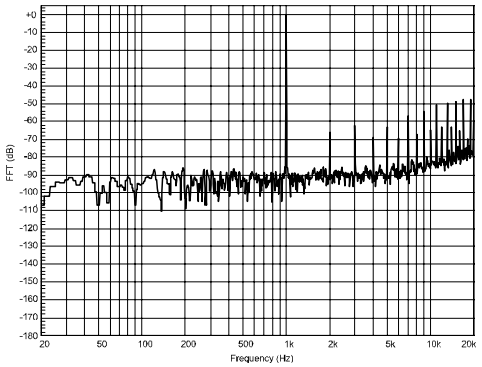

Figure 18: FFT performance (-60 dB)

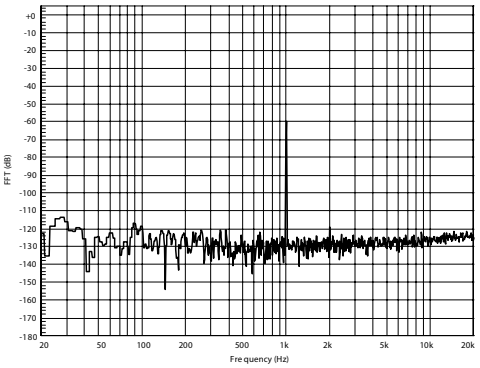

5 Application information

5.1 Application circuit

Figure 19: Application circuit for 6 Ω or 8 Ω speakers

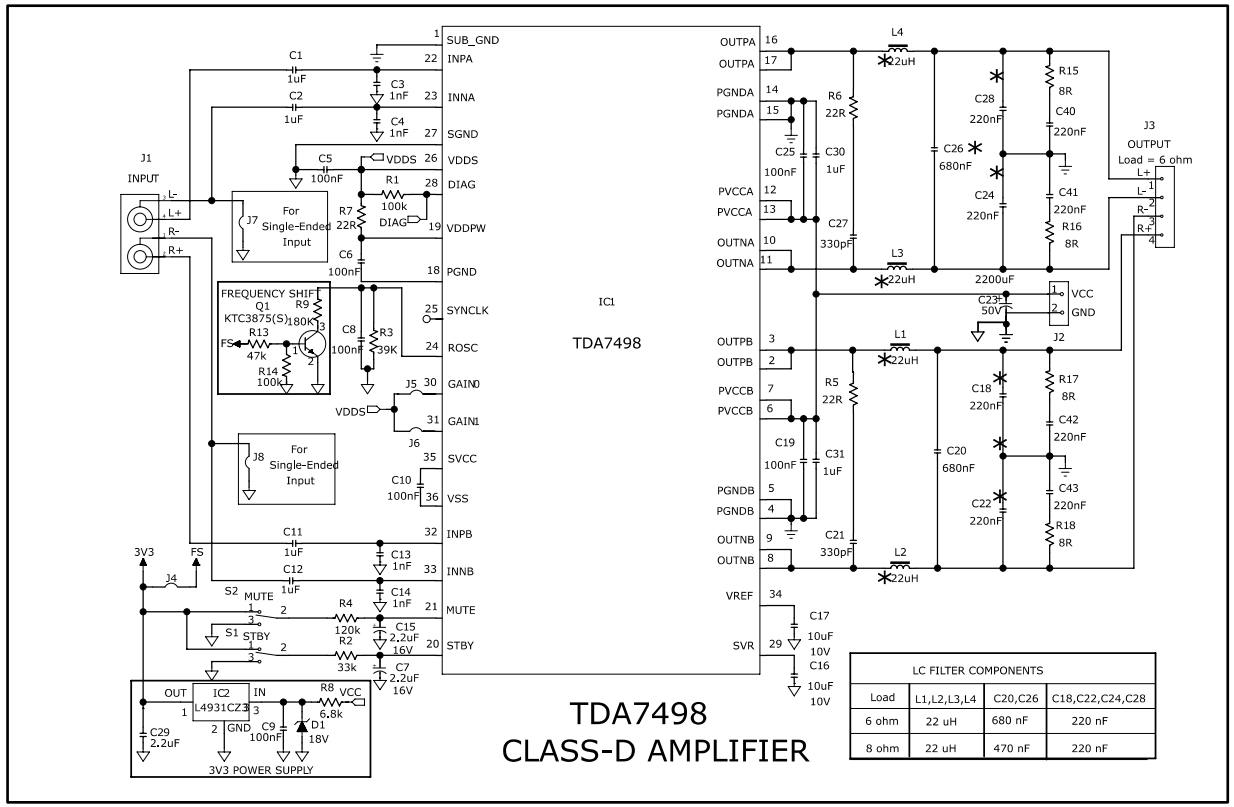

5.2 Mode selection

The three operating modes of the TDA7498 are set by the two inputs, STBY (pin 20) and MUTE (pin 21).

- Standby mode: all circuits are turned off, very low current consumption.
- Mute mode: inputs are connected to ground and the positive and negative PWM outputs are at 50% duty cycle.
- Play mode: the amplifiers are active.

The protection functions of the TDA7498 are enabled by pulling down the voltages of the STBY and MUTE inputs shown in *Figure 20: "Standby and mute circuits"*. The input current of the corresponding pins must be limited to 200 µA.

Table 7: Mode settings

Mode	STBY	MUTE
Standby	L (1)	X (don't care)
Mute	H (1)	L
Play	H	H

Notes:
(1)Drive levels defined in *Table 6: "Electrical specifications "*

Figure 20: Standby and mute circuits

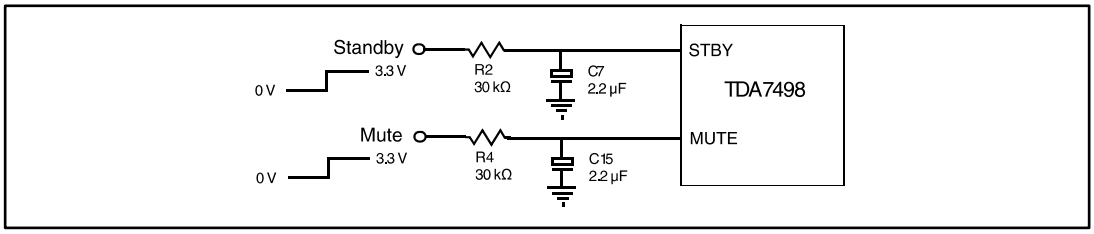

Figure 21: Turn on/off sequence for minimizing speaker "pop"

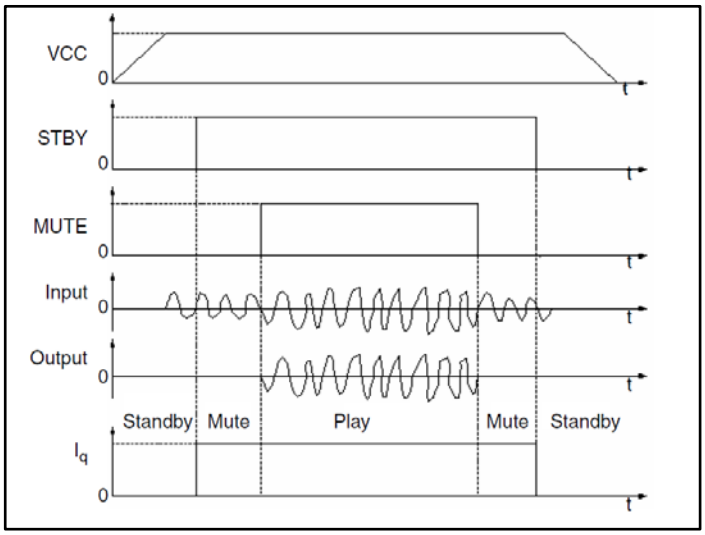

5.3 Gain setting

The gain of the TDA7498 is set by the two inputs, GAIN0 (pin 30) and GAIN1 (pin31). Internally, the gain is set by changing the feedback resistors of the amplifier.

Table 8: Gain settings

GAIN0	GAIN1	Nominal gain, G_v (dB)
L	L	25.6
L	H	31.6
H	L	35.6
H	H	37.6

5.4 Input resistance and capacitance

The input impedance is set by an internal resistor Ri = 60 kΩ (typical). An input capacitor (Ci) is required to couple the AC input signal.

The equivalent circuit and frequency response of the input components are shown in *Figure 22: "Input circuit and frequency response"*. For Ci = 470 nF the high-pass filter cutoff frequency is below 20 Hz:

$f_C = 1 / (2 * \pi * Ri * Ci)$

Figure 22: Input circuit and frequency response

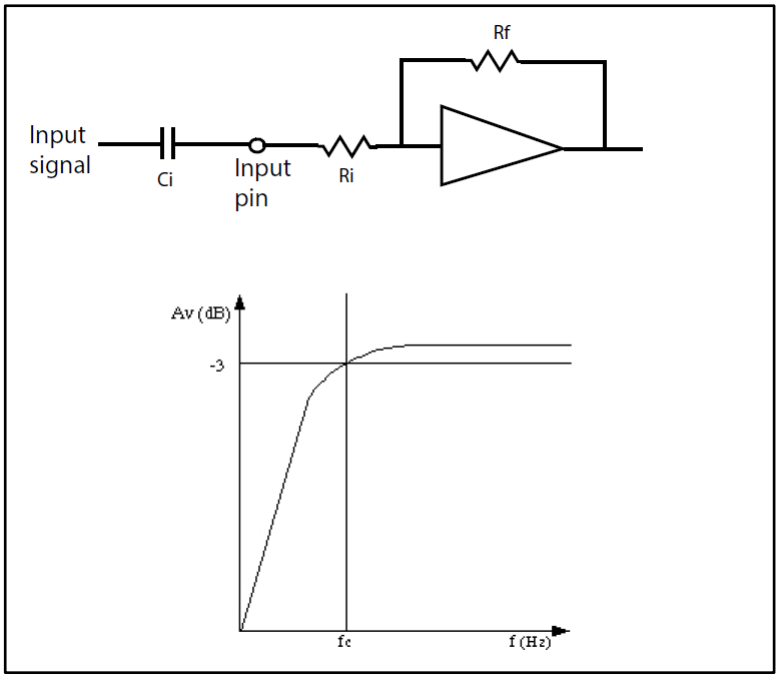

5.5 Internal and external clocks

The clock of the class-D amplifier can be generated internally or can be driven by an external source.

If two or more class-D amplifiers are used in the same system, it is recommended that all devices operate at the same clock frequency. This can be implemented by using one TDA7498 as master clock, while the other devices are in slave mode, that is, externally clocked. The clock interconnect is via pin SYNCLK of each device. As explained below, SYNCLK is an output in master mode and an input in slave mode.

5.5.1 Master mode (internal clock)

Using the internal oscillator, the output switching frequency, f_{SW}, is controlled by the resistor, R_{OSC}, connected to pin ROSC:

$$f_{SW} = 10^6 / [(R_{OSC} * 16 + 182) * 4] \text{ kHz}$$

where R_{OSC} is in kΩ.

In master mode, pin SYNCLK is used as a clock output pin whose frequency is:

$$f_{SYNCLK} = 2 * f_{SW}$$

For master mode to operate correctly then resistor R_{OSC} must be less than 60 kΩ as given below in *Table 9: "How to set up SYNCLK"*.

5.5.2 Slave mode (external clock)

In order to accept an external clock input the pin ROSC must be left open, that is, floating. This forces pin SYNCLK to be internally configured as an input as given in *Table 9: "How to set up SYNCLK"*.

The output switching frequency of the slave devices is:

$f_{SW} = f_{SYNCLK} / 2$

Table 9: How to set up SYNCLK

Mode	ROSC	SYNCLK
Master	R_{OSC} < 60 kΩ	Output
Slave	Floating (not connected)	Input

Figure 23: Master and slave connection

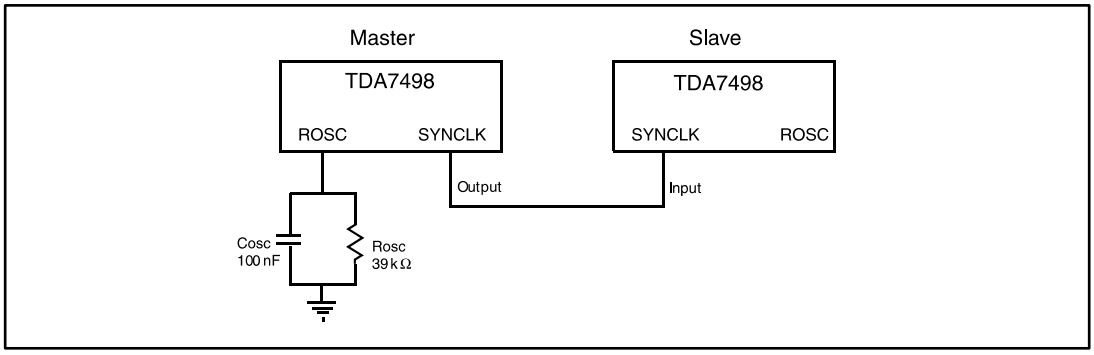

5.6 Output low-pass filter

To avoid EMI problems, it may be necessary to use a low-pass filter before the speaker. The cutoff frequency should be larger than 22 kHz and much lower than the output switching frequency. It is necessary to choose the L and C component values depending on the loudspeaker impedance. Some typical values, which give a cutoff frequency of 27 kHz, are shown in *Figure 24: "Typical LC filter for an 8 Ω speaker"* and *Figure 25: "Typical LC filter for a 6 Ω speaker"* below.

Figure 24: Typical LC filter for an 8 Ω speaker

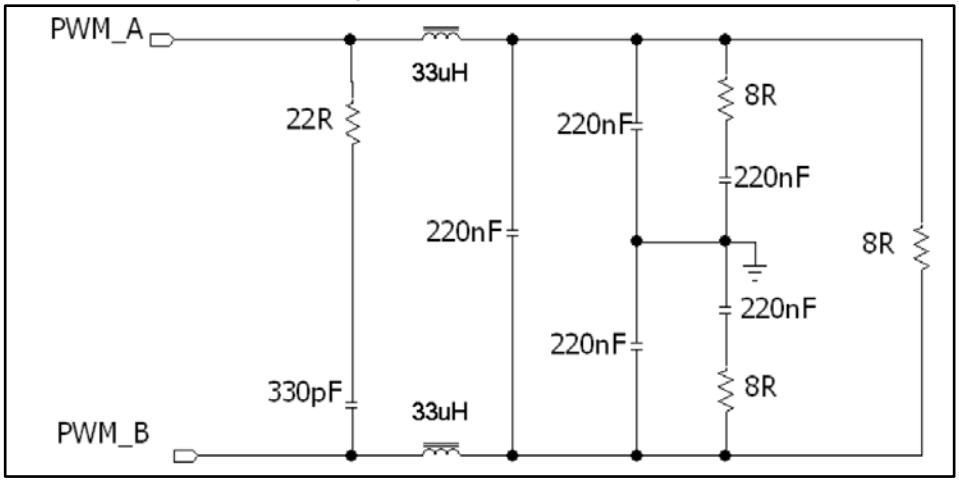

Figure 25: Typical LC filter for a 6 Ω speaker

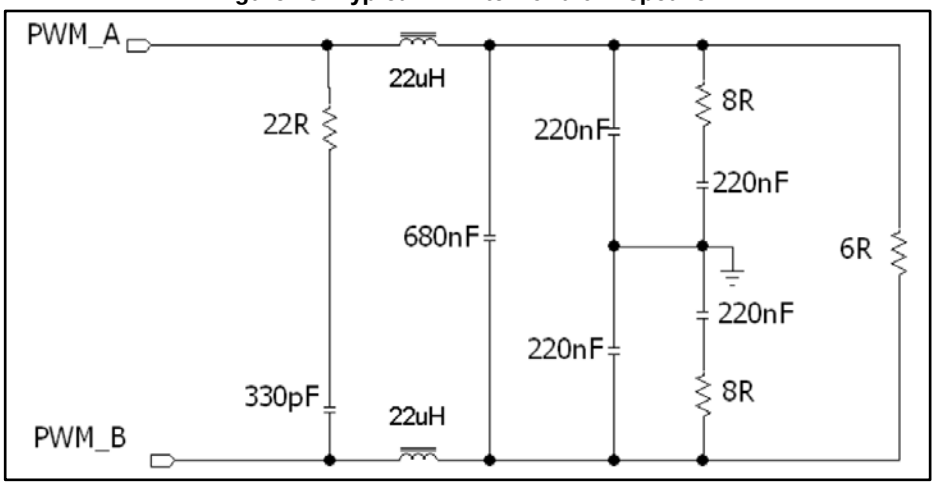

5.7 Protection functions

The TDA7498 is fully protected against overvoltages, undervoltages, overcurrents and thermal overloads as explained here.

Overvoltage protection (OVP)

If the supply voltage exceeds the value for V_{OVP} given in *Table 6: "Electrical specifications "*, the overvoltage protection is activated which forces the outputs to the high-impedance state. When the supply voltage falls back to within the operating range, the device restarts.

Undervoltage protection (UVP)

If the supply voltage drops below the value for V_{UVP} given in *Table 6: "Electrical specifications "*, the undervoltage protection is activated which forces the outputs to the high-impedance state. When the supply voltage falls back to within the operating range, the device restarts.

Overcurrent protection (OCP)

If the output current exceeds the value for I_{OCP} given in *Table 6: "Electrical specifications "*, the overcurrent protection is activated which forces the outputs to the high-impedance state. Periodically, the device attempts to restart. If the overcurrent condition is still present, then the OCP remains active. The restart time, T_{OC}, is determined by the RC components connected to pin STBY.

Thermal protection (OTP)

If the junction temperature, T_j, reaches 145 °C (nominally), the device goes to mute mode and the positive and negative PWM outputs are forced to 50% duty cycle. If the junction temperature reaches the value for T_j given in *Table 6: "Electrical specifications "*, the device shuts down and the output is forced to the high-impedance state. When the device cools sufficiently the device restarts.

5.8 Diagnostic output

The output pin DIAG is an open-drain transistor. When any protection is activated, it switches to the high-impedance state. The pin can be connected to a power supply (< 39 V) by a pull-up resistor whose value is limited by the maximum sinking current (200 µA) of the pin.

Figure 26: Behavior of pin DIAG for various protection conditions

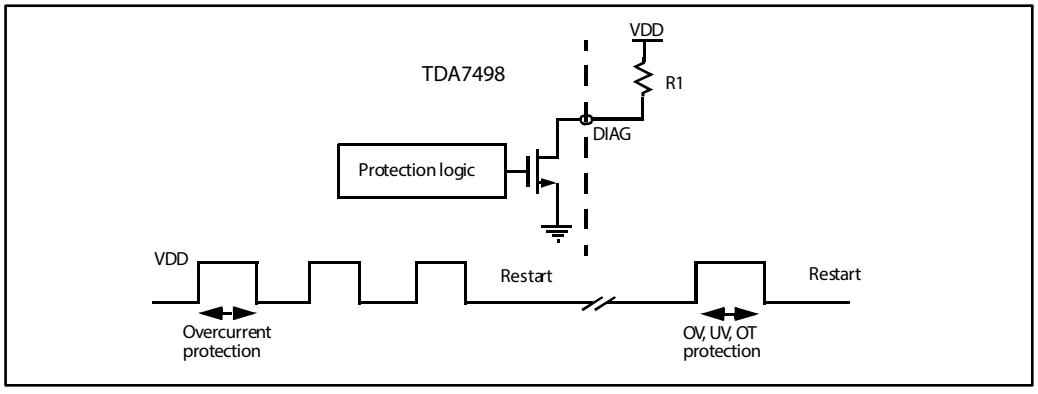

6 Package information

In order to meet environmental requirements, ST offers these devices in different grades of ECOPACK® packages, depending on their level of environmental compliance. ECOPACK® specifications, grade definitions and product status are available at: ***www.st.com***. ECOPACK® is an ST trademark.

6.1 PowerSSO-36 EPU package information

The device comes in a 36-pin PowerSSO package with exposed pad up (EPU).

Figure 27: "PowerSSO-36 EPU package outline" shows the package outline and *Table 10: "PowerSSO-36 EPU package mechanical data"* gives the dimensions.

Figure 27: PowerSSO-36 EPU package outline

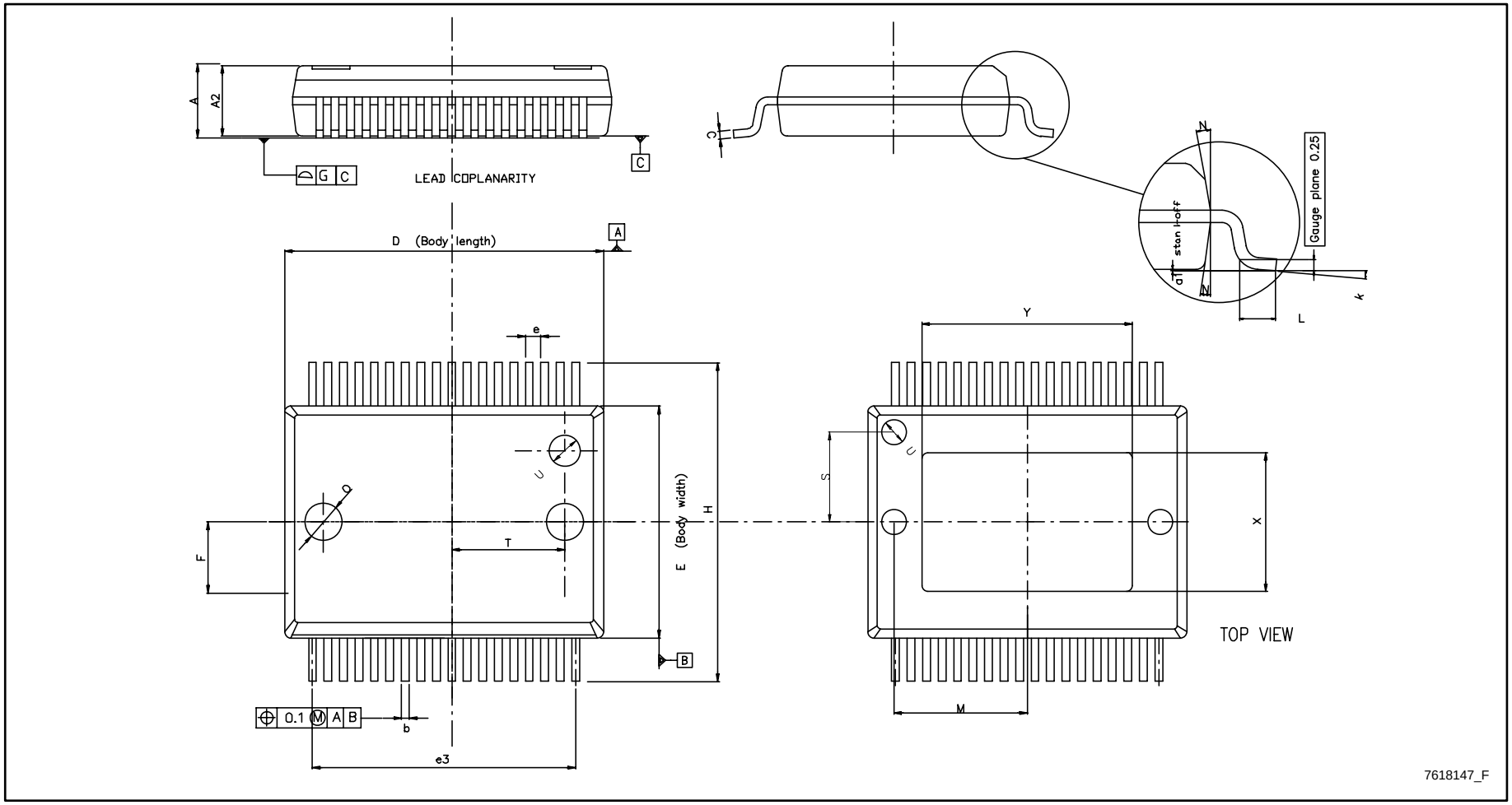

Table 10: PowerSSO-36 EPU package mechanical data

Symbol	Dimensions in mm			Dimensions in inches		
	Min.	Typ.	Max.	Min.	Typ.	Max.
A	2.15	-	2.45	0.085	-	0.096
A2	2.15	-	2.35	0.085	-	0.093
a1	0	-	0.10	0	-	0.004
b	0.18	-	0.36	0.007	-	0.014
c	0.23	-	0.32	0.009	-	0.013
D	10.10	-	10.50	0.398	-	0.413
E	7.40	-	7.60	0.291	-	0.299
e	-	0.5	-	-	0.020	-
e3	-	8.5	-	-	0.335	-
F	-	2.3	-	-	0.091	-
G	-	-	0.10	-	-	0.004
H	10.10	-	10.50	0.398	-	0.413
h	-	-	0.40	-	-	0.016
k	0	-	8 degrees	0	-	8 degrees
L	0.55	-	0.85	0.022	-	0.033
M	-	4.30	-	-	0.169	-
N	-	-	10 degrees	-	-	10 degrees
O	-	1.20	-	-	0.047	-
Q	-	0.80	-	-	0.031	-
S	-	2.90	-	-	0.114	-
T	-	3.65	-	-	0.144	-
U	-	1.00	-	-	0.039	-
X	4.10	-	4.70	0.161	-	0.185
Y	4.90	-	7.10	0.193	-	0.280

7 Revision history

Table 11: Document revision history

Date	Revision	Changes
11-Aug-2009	1	Initial release.
27-Aug-2009	2	Updated supply voltage range on page 1. Updated package exposed pad dimension Y (Min) in *Table 10: "PowerSSO-36 EPU package mechanical data"*.
23-Oct-2009	3	Updated first feature on page 1. Updated order code name in *Table 1: "Device summary"* Updated *Table 6: "Electrical specifications "* Updated *Section 5.3: "Characterization curves"* Removed tables for standby, mute and gain after *Figure 19: "Application circuit for 6 Ω or 8 Ω speakers"*.
30-Jun-2010	4	Removed datasheet preliminary status, updated features list and updated *Table 1: "Device summary"* Added *Table 5: "Recommended operating conditions"* with updated minimum supply voltage.
27-Jan-2011	5	Updated applications circuit in *Figure 19: "Application circuit for 6 Ω or 8 Ω speakers"*.
11-Feb-2011	6	Updated test circuit for characterizations in *Figure 3: "Test circuit for characterizations"*.
29-Mar-2011	7	Updated I_{OCP} in *Table 6: "Electrical specifications "*.
12-Sep-2011	8	Updated OUTNA in *Table 2: "Pin description list"*
09-Sep-2015	9	Updated V_{CC} in *Table 3: "Absolute maximum ratings"* and dimension L in *Table 10: "PowerSSO-36 EPU package mechanical data"*

IMPORTANT NOTICE – PLEASE READ CAREFULLY

STMicroelectronics NV and its subsidiaries (“ST”) reserve the right to make changes, corrections, enhancements, modifications, and improvements to ST products and/or to this document at any time without notice. Purchasers should obtain the latest relevant information on ST products before placing orders. ST products are sold pursuant to ST’s terms and conditions of sale in place at the time of order acknowledgement.

Purchasers are solely responsible for the choice, selection, and use of ST products and ST assumes no liability for application assistance or the design of Purchasers’ products.

No license, express or implied, to any intellectual property right is granted by ST herein.

Resale of ST products with provisions different from the information set forth herein shall void any warranty granted by ST for such product.

ST and the ST logo are trademarks of ST. All other product or service names are the property of their respective owners.

Information in this document supersedes and replaces information previously supplied in any prior versions of this document.

© 2015 STMicroelectronics – All rights reserved