Class T Fuseblocks

T300

300 Volt, ½ to 600 Amps





Catalog Symbol: T300
Ampere Rating: ½ to 600 Amperes
Voltage Rating: 300 Volts
Agency Information:
UL Listed, UL512, Guide IZLT, File E14853
CSA Certified, C22.2 No. 39, Class 6225-01, File 47235
Withstand Rating: 200,000 Amps RMS Sym.
For use with Class T fuses (Bussmann JJN)
Materials: Glass Polyester, Phenolic on 600A
UL Flammability: 94 VO

Class T Fuseblocks (300V) Catalog Data

Amps	Poles	Catalog Numbers Screw	Box Lug	Figure Number	Max. Wire Size
½–30	2	T30030-2SR	T30030-2CR	1	SR #10CU, CR #2CU-AL
	3	T30030-3SR	T30030-3CR		
	4	T30030-4SR	T30030-4CR		
31–60	2	T30060-2SR	T30060-2CR	1	#2CU-AL
	3	T30060-3SR	T30060-3CR		
	4	T30060-4SR	T30060-4CR		
61–100	1	—	T30100-1CR	2	1/0 CU-AL
	2	—	T30100-2CR		
	3	—	T30100-3CR		
101-200	1	—	T30200-1C	3	250kcmil CU-AL
	3	—	T30200-3C	3a	
	3	—	T30200-3ST	3b	
201–400	1	—	T30400-1C	4	600kcmil CU-AL
401–600	1	—	T30600-1C	5	(2) 600kcmil CU-AL

Dimensional Data All dimensions (±0.016)

Figure 1. ½ A to 60A

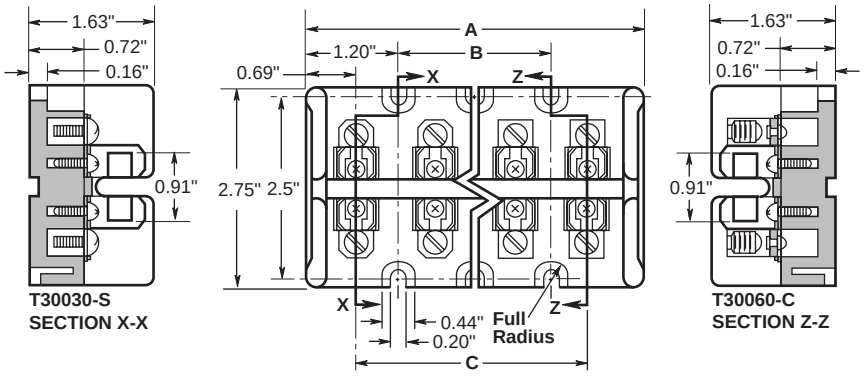

Class T Fuseblocks (300V) Catalog Numbers

Terminal Type	Dimensions (inches) A	B	C
T30030-2 T30060-2	2.41	—	1.03
T30030-3 T30060-3	3.44	1.03	2.06
T30030-4 T30060-4	4.47	2.06	3.09

All dimensions (±0.016)

CE CE logo denotes compliance with European Union Low Voltage Directive (50-1000 VAC, 75-1500 VDC). Refer to Data Sheet: 8002 or contact Bussmann Application Engineering at 636-527-1270 for more information.

Class T Fuseblocks

T300

300 Volt, ½ to 600 Amps

Dimensional Data

Figure 2. 61A to 100A

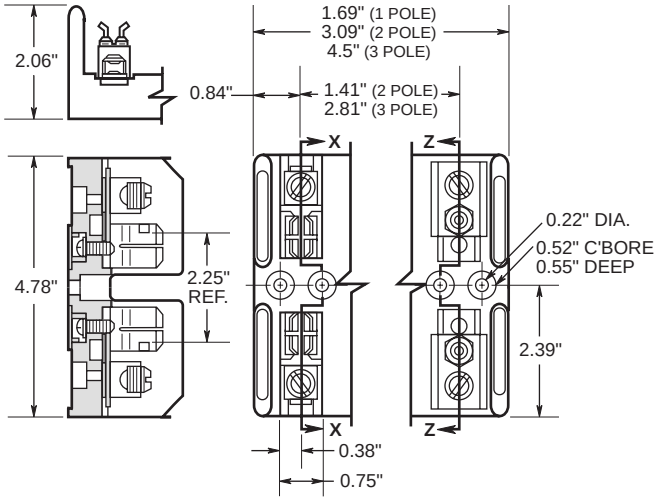

All dimensions (±0.016)

Figure 3. 101A to 200A

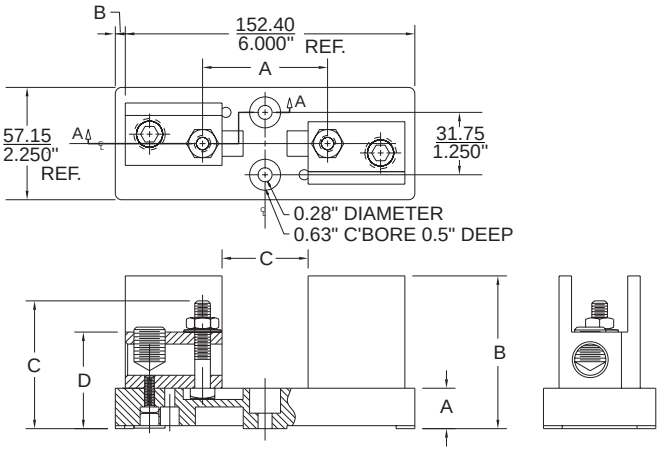

Figure 3A.

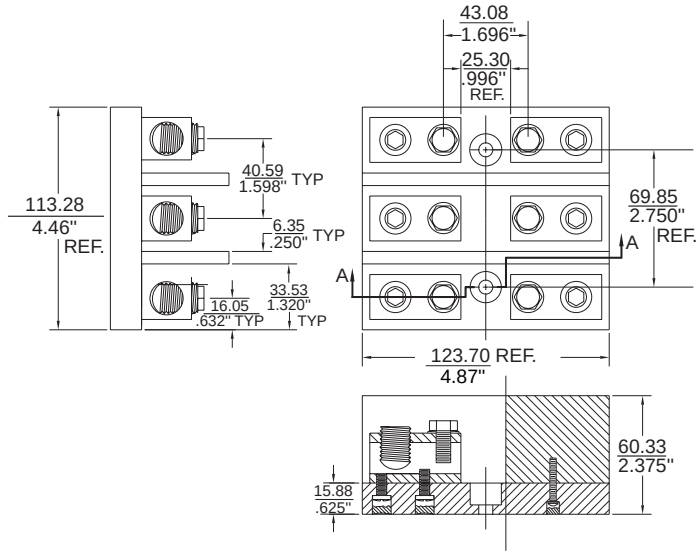

Figure 3B.

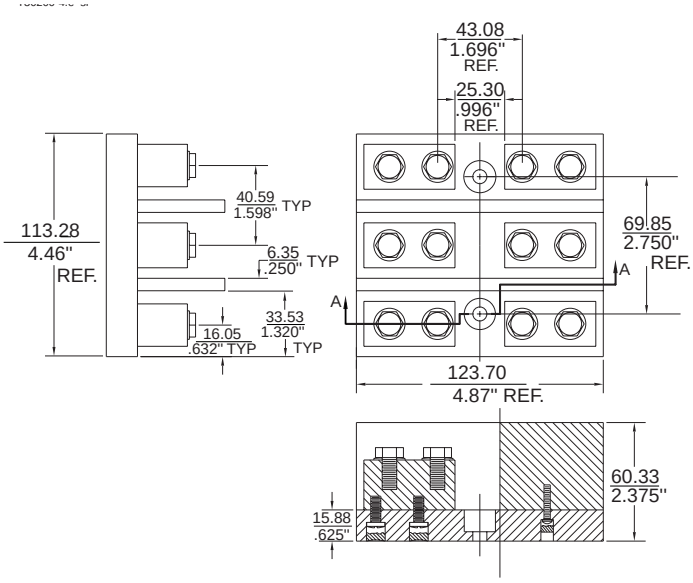

Class T Fuseblocks

300 Volt, ½ to 600 Amps

Figure 4. 201A to 400A

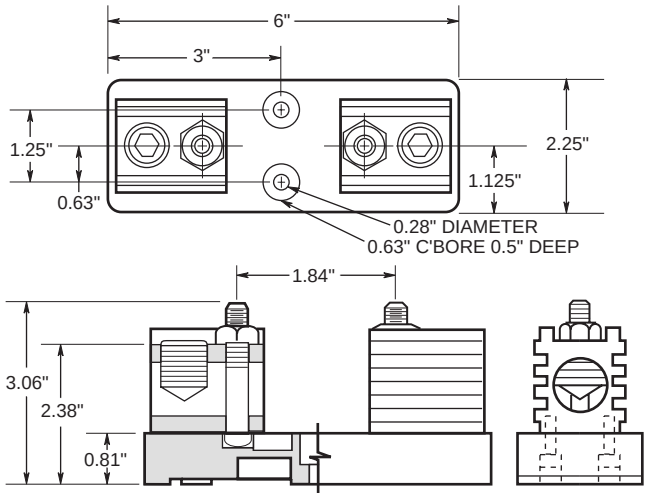

Figure 5. 401A to 600A

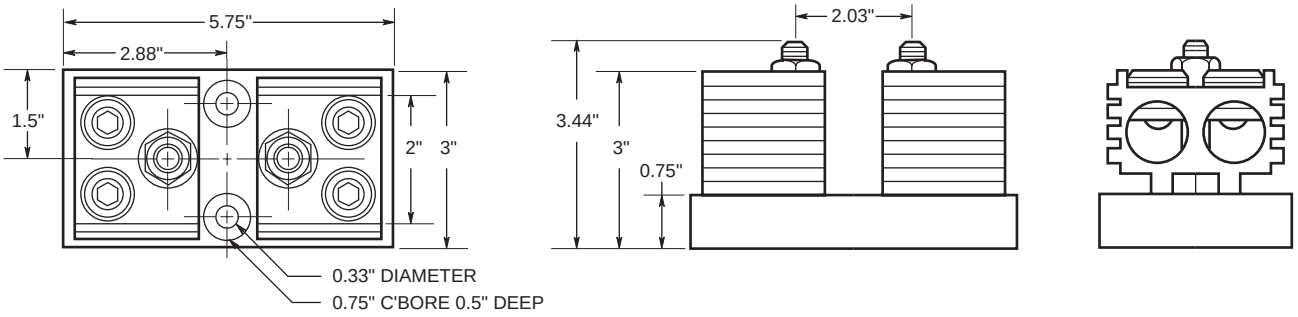

The only controlled copy of this Data Sheet is the electronic read-only version located on the Bussmann Network Drive. All other copies of this document are by definition uncontrolled. This bulletin is intended to clearly present comprehensive product data and provide technical information that will help the end user with design applications. Bussmann reserves the right, without notice, to change design or construction of any products and to discontinue or limit distribution of any products. Bussmann also reserves the right to change or update, without notice, any technical information contained in this bulletin. Once a product has been selected, it should be tested by the user in all possible applications.