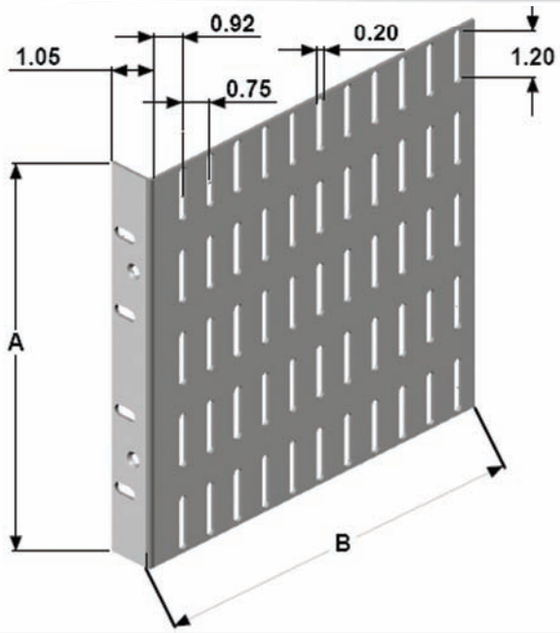

"P" Type Side Panel

Material: 0.080" aluminum with clear irridite finish

Part No.	Overall Height A	Depth B	Vector Handle	Accepts Max Card Height	Rack Units (H)
SW34P89/90	3.48"	9.0"	HA13	2.75"	2U
SW34P119/90	3.48"	12.0"	HA13	2.75"	2U
SW34P156/90	3.48"	15.75"	HA13	2.75"	2U
SW52P89/90	5.23"	9.0"	HA12	4.5"	3U
SW52P119/90	5.23"	12.0"	HA12	4.5"	3U
SW52P156/90	5.23"	15.75"	HA12	4.5"	3U
SW69P89/90	6.98"	9.0"	HA13	6.25"	4U
SW69P119/90	6.98"	12.0"	HA13	6.25"	4U
SW69P156/90	6.98"	15.75"	HA13	6.25"	4U
SW87P89/90	8.73"	9.0"	HA12	8.0"	5U
SW87P119/90	8.73"	12.0"	HA12	8.0"	5U
SW87P156/90	8.73"	15.75"	HA12	8.0"	5U
SW104P89/90	10.47"	9.0"	HA12	9.75"	6U
SW104P119/90	10.47"	12.0"	HA12	9.75"	6U
SW104P156/90	10.47"	15.75"	HA12	9.75"	6U
SW122P156/90	12.22"	15.75"	HA12	11.5"	7U
SW122P202/90	12.22"	20.25"	HA12	11.5"	7U
SW157P119/90	15.72"	12.0"	HA19-9U	15.0"	9U

Modules or Front Panel Mounting Hardware

SC 10-2A Thumb screws and SC10-3A jack screws (supplied with EFP modules, Cardmount modules and front assemblies to T-struts. SP09-2 spacers are used as standoffs for mounting modules to 1" T-struts (1.79" struts are standard with module subracks.)

Part No.	Description	Pkg Qty
SP09-2	Hex spacer for module mounting, includes hardware	12
SC10-2A	Thumb screw fully threaded for direct attachment of panels	12
SC10-3A	Jack screw for mounting modules to T-struts with jacking action	12

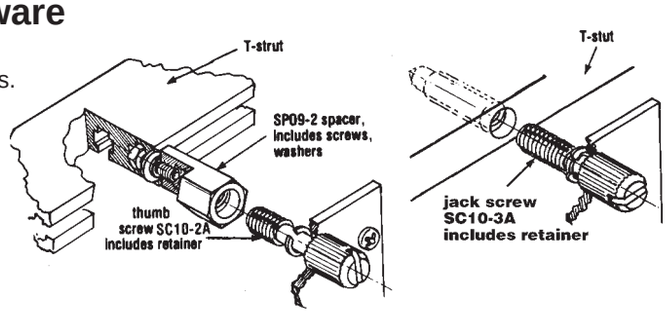

THE FOLLOWING ACCESSORIES ARE NOT COMPATIBLE WITH CCE-STYLE ENCLOSED RACKS ON THE PREVIOUS PAGE

Top and Bottom Card Rack Covers - CAC1, CAC2, CAC3

Two 1/16" thick aluminum covers with clear irridite finish provide protection over and under the card area, is designed to snap into opposing groves in the horizontal T-Strut rails. Rear panels CRK3, CRK5, CRK7 includes attachment hardware for mounting onto Vectorpak P-type sidepanels are easy to customize.



CAC1 and CRK3

Bottom Hinged Front Panels - HFP52-1

These are designed for use as a front "drop-down" panel with lanyard for holding the panel at 90º. Provides a work surface and prevents damage to equipment. Comes complete with hardware and full instructions. Panels are 1/8" thick brushed aluminum with clear irridite finish.



CCA13S with HFP52-1

Use With Rack Size Height (Actual wall height)	Width	Depth	Bottom Hinged Front Panels (w/L20 lanyard)	Rear Panels	Top / Bottom solid Covers	Rack Flange Dress Panels (3" wide)	Rack Handles (Sold as pair)
3U 5.23"	19.00"	9.00"	HFP52-1	CRK3	CAC1	FP52-2	HA12
3U 5.23"	19.00"	12.00"	HFP52-1	CRK3	CAC2	FP52-2	HA12
3U 5.23"	19.00"	15.75"	HFP52-1	CRK3	CAC3	FP52-2	HA12
4U 6.98"	19.00"	12.00"	HFP69-1	CRK5	CAC2	FP69-2	HA13
4U 6.98"	19.00"	15.75"	HFP69-1	CRK5	CAC3	FP69-2	HA13
5U 8.73"	19.00"	12.00"	HFP87-1	CRK7	CAC2	FP87-2	HA12
5U 8.73"	19.00"	15.75"	HFP87-1	CRK7	CAC3	FP87-2	HA12

REVISIONS				
ZONE	REV.	DESCRIPTION	DATE	APPROVED
	G	REDRAWN, ECO 3028	03/14/86	
	H	INC ECO 3924	01/02/91	
	H	REVISED AND REDRAWN, N/C	09/14/93	
	H1	INCORPORATED ECO 4078	04/14/94	
	H2	REDRAWN, CHANGES IN DETAIL NO. 5	08/05/05	
	I	ADDED DETAIL 6	01/11/12	

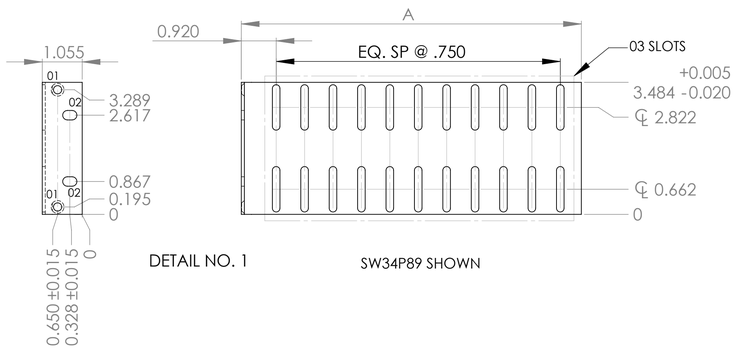

DETAIL NO. 1 SW34P89 SHOWN

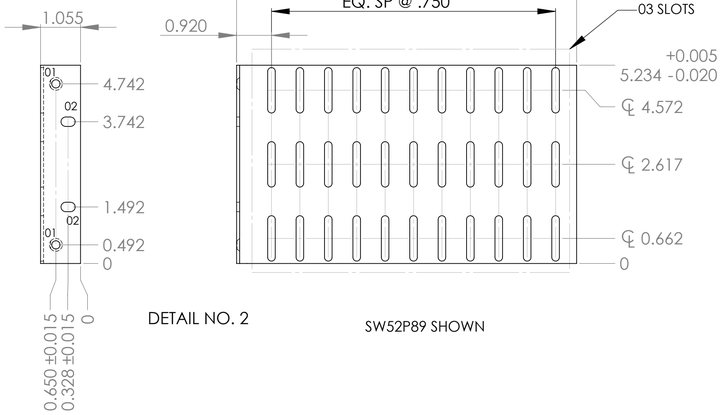

DETAIL NO. 2 SW52P89 SHOWN

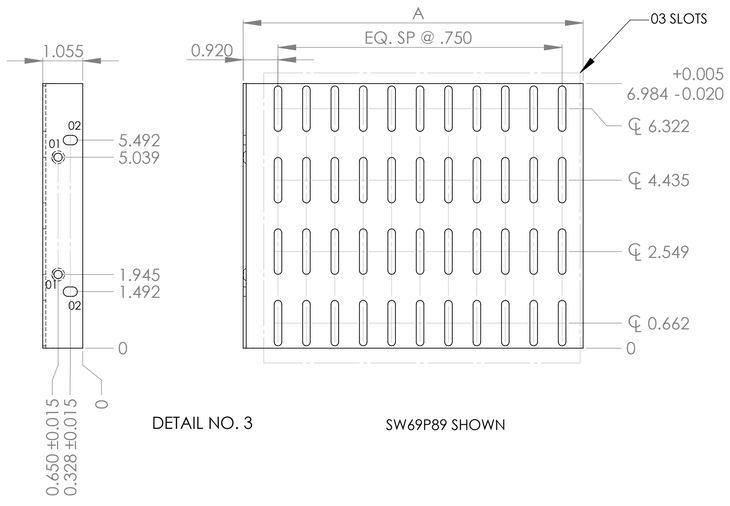

DETAIL NO. 3 SW69P89 SHOWN

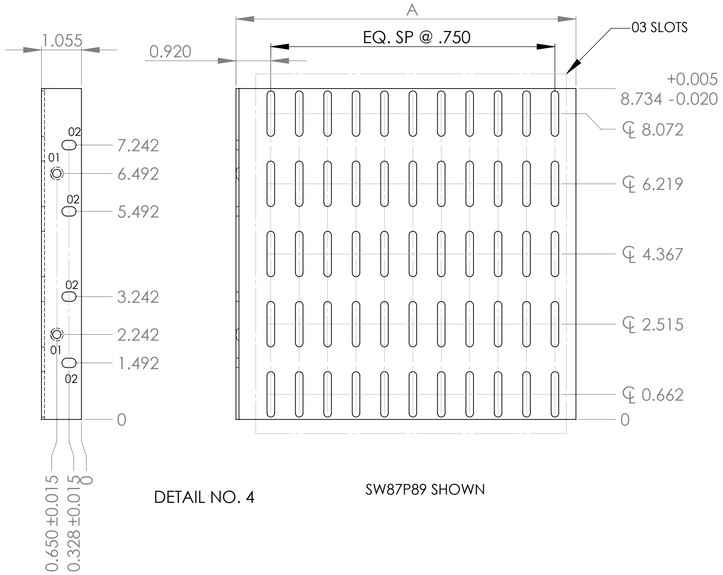

DETAIL NO. 4 SW87P89 SHOWN

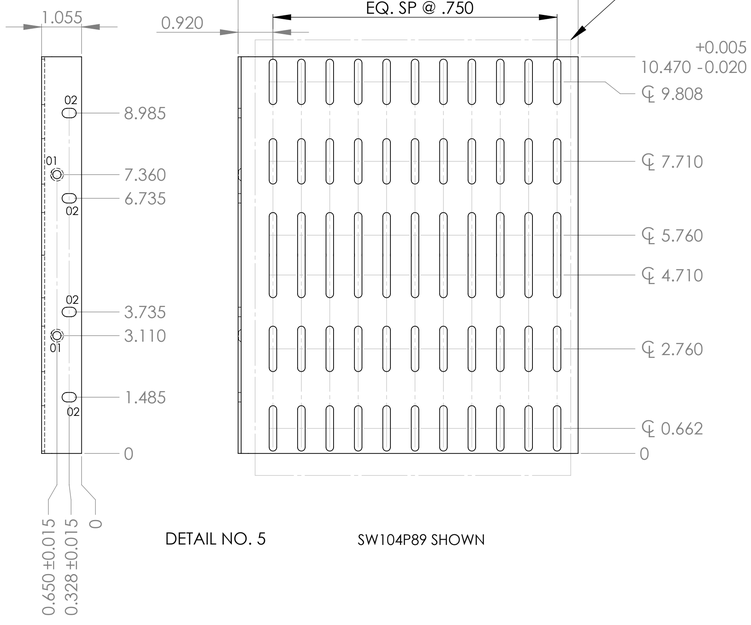

DETAIL NO. 5 SW104P89 SHOWN

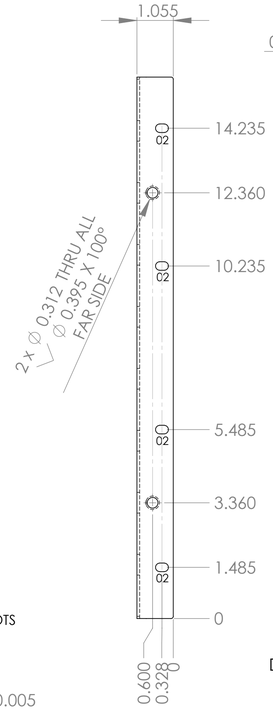

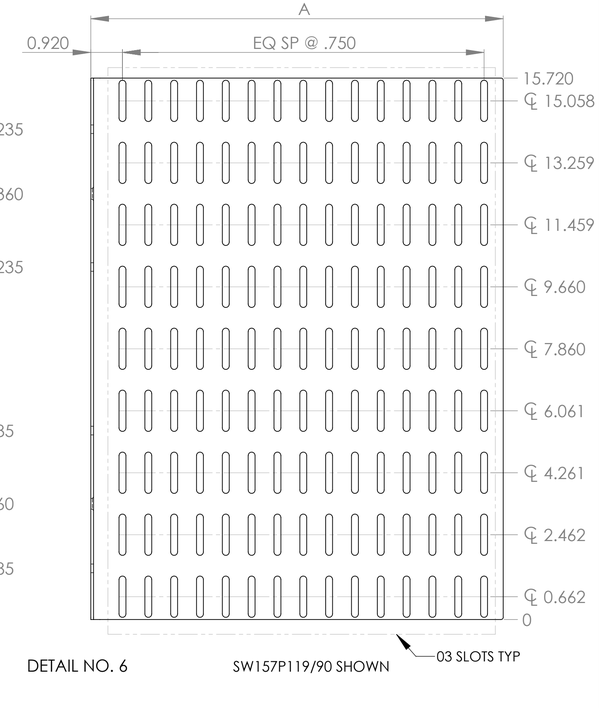

DETAIL NO. 6 SW157P119/90 SHOWN

TABULATION		
SYM	SIZE	QTY
01	.218 +/- .002 DIA. CSK X .339 +/- .005 DIA.	2
02	.250 X .375 OBLONG	SEE
03	.200 +/- .005 X 1.200 OBLONG	TABLE

TABULATION

CAT. NO.	DET. NO.	A Deformed Lgth	B Flat Lgth	QTY 02 SLOTS	QTY 03 SLOTS
SW34P89/90	1	8.975	9.845	2	22
SW34P119/90	1	11.975	12.845	2	30
SW34P156/90	1	15.725	16.595	2	40
SW52P89/90	2	8.975	9.845	2	33
SW52P119/90	2	11.975	12.845	2	45
SW52P156/90	2	15.725	16.595	2	60
SW69P89/90	3	8.975	9.845	2	44
SW69P119/90	3	11.975	12.845	2	60
SW69P156/90	3	15.725	16.595	2	80
SW87P89/90	4	8.975	9.845	4	55
SW87P119/90	4	11.975	12.845	4	75
SW87P156/90	4	15.725	16.595	4	100
SW104P89/90	5	8.975	9.845	4	66
SW104P119/90	5	11.975	12.845	4	75
SW104P156/90	5	15.725	16.595	4	100
SW157P119/90	6	11.975	12.845	4	135

6. K =.185
5. INSIDE BEND RADIUS: .187
4. GRAIN FINISH
3. FINISH: SATIN ETCH, 7 MIN., CHEM., FILM, CLEAR CLASS 1A, IAW MIL-C-5541
2. MATL: AL. ALLOY, 5005-H34, .080 THK., PRE - ANOD. ,P/N: 0030-55-31
1. REMOVE ALL BURRS AND SHARP EDGES

NOTES: UNLESS OTHERWISE SPECIFIED

PROPRIETARY AND CONFIDENTIAL
THE INFORMATION CONTAINED IN THIS DRAWING IS THE SOLE PROPERTY OF <INSERT COMPANY NAME HERE>. ANY REPRODUCTION IN PART OR AS A WHOLE WITHOUT THE WRITTEN PERMISSION OF <INSERT COMPANY NAME HERE> IS PROHIBITED.

NEXT ASSY | USED ON | APPLICATION

UNLESS OTHERWISE SPECIFIED:
DIMENSIONS ARE IN INCHES
TOLERANCES:
FRACTIONAL ±
ANGULAR: ± .5°
TWO PLACE DECIMAL ± .03
THREE PLACE DECIMAL ± .010
INTERPRET AS PER: ASME Y14.5M 1994
MATERIAL 2
FINISH 3

	NAME	DATE
DRAWN	A.SAH	08/05/05
CHECKED		
ENG APPR.		
MFG APPR.		
Q.A.		

COMMENTS:

VECTOR ELECTRONICS & TECHNOLOGIES INC.
NORTH HOLLYWOOD, CA

TITLE: SIDE WALL P-TYPE, STANDARD

SIZE D | DWG. NO. M4424D5.11 | REV I

SCALE: 1:2 | WEIGHT: | SHEET: 1 OF 1