Industrial HRC Fuse

12 x 48mm, BS88: Part 6, IEC 269-1

Offset Blade Tags

SSD

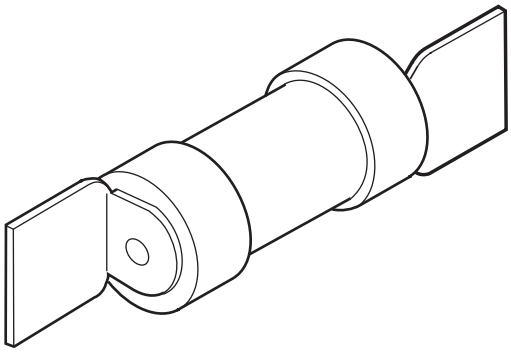

CATALOG SYMBOL: SSD
INDUSTRIAL HRC FUSE
OFFSET BLADE TAGS
PACKAGE QUANTITY: 20
33kA INTERRUPTING RATING

Dimensional Data:

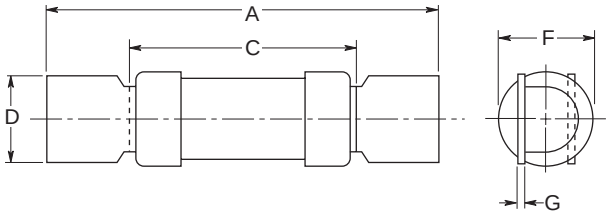

Time-Current Characteristic Curve (Full Size Curves Available)

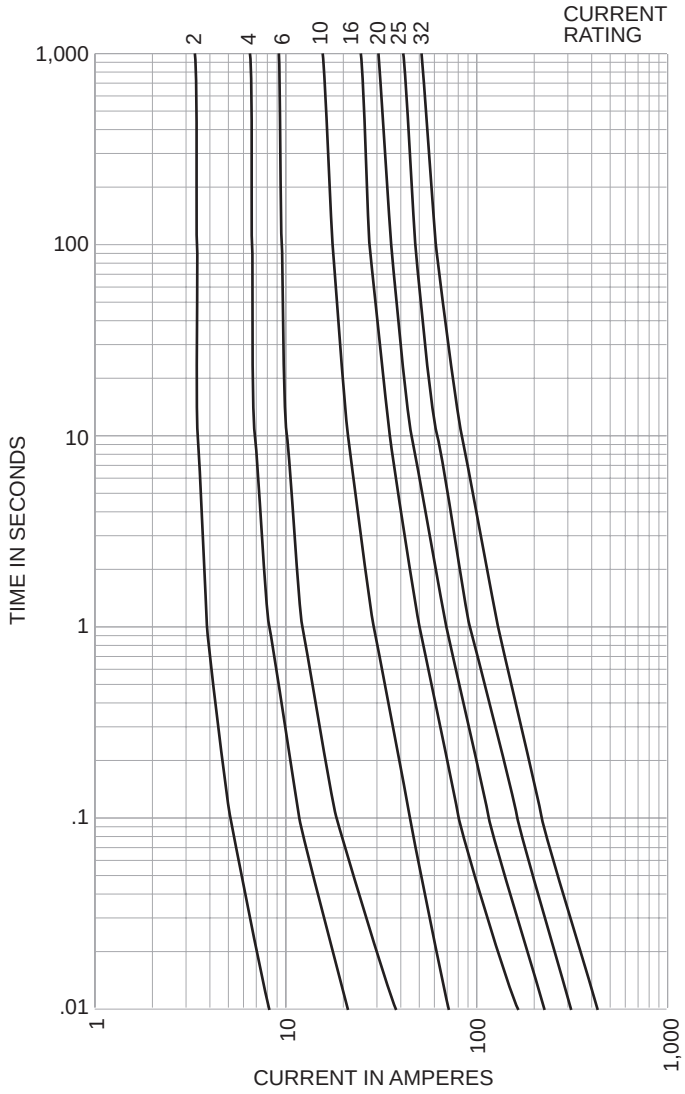

Electrical Characteristics

Catalog Number	Ampere Rating	I²T (Amp² Seconds) Pre-Arcing	I²T (Amp² Seconds) Total At 415V	Watts Loss	Nom Rated Voltage	Dimensions (Inches/mm) A	C	D	F	G
SSD2	2	0.8	1	0.5	240AC	47.0	23.0	12.7	0.47 12.0	0.03 0.8
SSD4	4	5.4	8	1						
SSD6	6	15	22	1.6						
SSD10	10	28	42	1.2						
SSD16	16	160	250	1.5						
SSD20	20	293	450	1.7						
SSD25	25	800	1300	1.8						
SSD32	32	1600	2500	2.4						

The only controlled copy of this BIF document is the electronic read-only version located on the Bussmann Network Drive. All other copies of this BIF document are by definition uncontrolled. This bulletin is intended to clearly present comprehensive product data and provide technical information that will help the end user with design applications. Bussmann reserves the right, without notice, to change design or construction of any products and to discontinue or limit distribution of any products. Bussmann also reserves the right to change or update, without notice, any technical information contained in this bulletin. Once a product has been selected, it should be tested by the user in all possible applications.

Mouser Electronics

Authorized Distributor

Click to View Pricing, Inventory, Delivery & Lifecycle Information:

Cooper Bussmann:

SSD10 SSD16 SSD2 SSD20 SSD25 SSD32 SSD4 SSD6