SOM-4487

Intel® Pentium® M Processor, 915GME/910GMLE ETX CPU Module

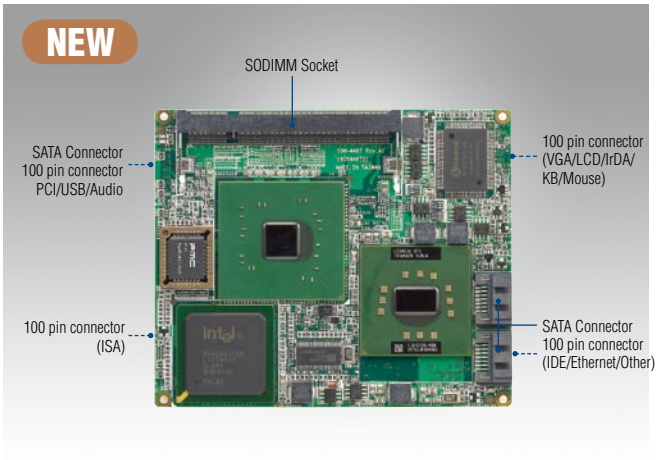

Features

- Embedded Intel Pentium M/Celeron® M processor +915GME + ICH6M
- Intel GMA 900 graphic engine, supports 24-bit LVDS
- Supports DDR2 SODIMM up to 2 GB
- Supports 4 PCI, LPC, 2 SATAII, 1 IDE, 4 USB 2.0
- Supports embedded software APIs and Utilities

Software APIs: Watchdog, I²C, SMBus, H/W Monitor, GPIO, Backlight On/Off

Utilities: BIOS flash, Monitoring, Flash Lock

Specifications

Form Factor		ETX 3.0
Processor System	CPU	Intel Pentium M/Celeron M Processor
	Front Side Bus	533/400 MHz
	System Chipset	Intel 915GME (910GMLE) GMCH/ICH6M
	BIOS	AWARD 4 Mbit Flash BIOS
Memory	Technology	DDR2 400/533 MHz (400 MHz for 910GMLE)
	Max. Capacity	up to 2 GB
	Socket	1 x 200-pin SODIMM socket
Display	Chipset	Intel 915GME(910GMLE)
	VRAM	DVMT 3.0 supports up to 128 MB
	Graphics Engine	Mobile Intel GMA900 3D/2D engine
	LCD	Single and dual channel 18/36-bit LVDS
	VGA	up to 2048 x 1536
	Dual Display	CRT + LCD
Ethernet	Chipset	Intel 82562GZ 10/100 Mbps Ethernet
	Speed	10/100 Mbps
WatchDog Timer		256 timer intervals, from 1 to 255 sec or min setup by software, jumperless selection, generates system reset
Expansion		4 x PCI master, ISA
I/O	PATA	1 x EIDE (UDMA 100)
	SATA	2 x SATA (On ETX CPU module)
	USB	4 x USB 2.0
	Audio	Realtek ALC203 AC97 Codec support Line-in/out, Mic-in
	GPIO	1-bit GPIO
	COM	2 COM ports
	FDD/LPT	1 x FDD or LPT
Power	Power Type	ATX, AT
	Power Supply Voltage	+5 V only (+5 VSB needs for ATX)
	Power Consumption (Typical)	Typical: (1 GB DDR2 533) +5 V @ 3.66 A (Intel Pentium M 760, 2.0G) (915GME) +5 V @ 2.63 A (Intel Pentium M LV 738, 1.4G) (915GME) +5 V @ 2.40 A (Intel Celeron M 373, 1.0G) (910GMLE) +5 V @ 2.37 A (Celeron M 373 0KB, 1.0G) (910GMLE) +5 V @ 2.23 A (Celeron M 600MHz) (910GMLE)
	Power Consumption (Max, test in HCT)	Max: (1 GB DDR2 533) +5 V @ 6.12 A (Intel Pentium M 760, 2.0G) (915GME) +5 V @ 3.84 A (Intel Pentium M LV 738, 1.4G) (915GME) +5 V @ 3.13 A (Intel Celeron M 373, 1.0G) (910GMLE) +5 V @ 3.08 A (Celeron M 373 0KB, 1.0G) (910GMLE) +5 V @ 2.82 A (Celeron M 600MHz) (910GMLE)
Environment	Operating Temperature	0 ~ 60° C (32 ~ 140° F)
	Operating Humidity	0% ~ 90% relative humidity, non-condensing
Mechanical	Dimensions	114 x 95 mm (4.5" x 3.74")

All product specifications are subject to change without notice

Board Diagram

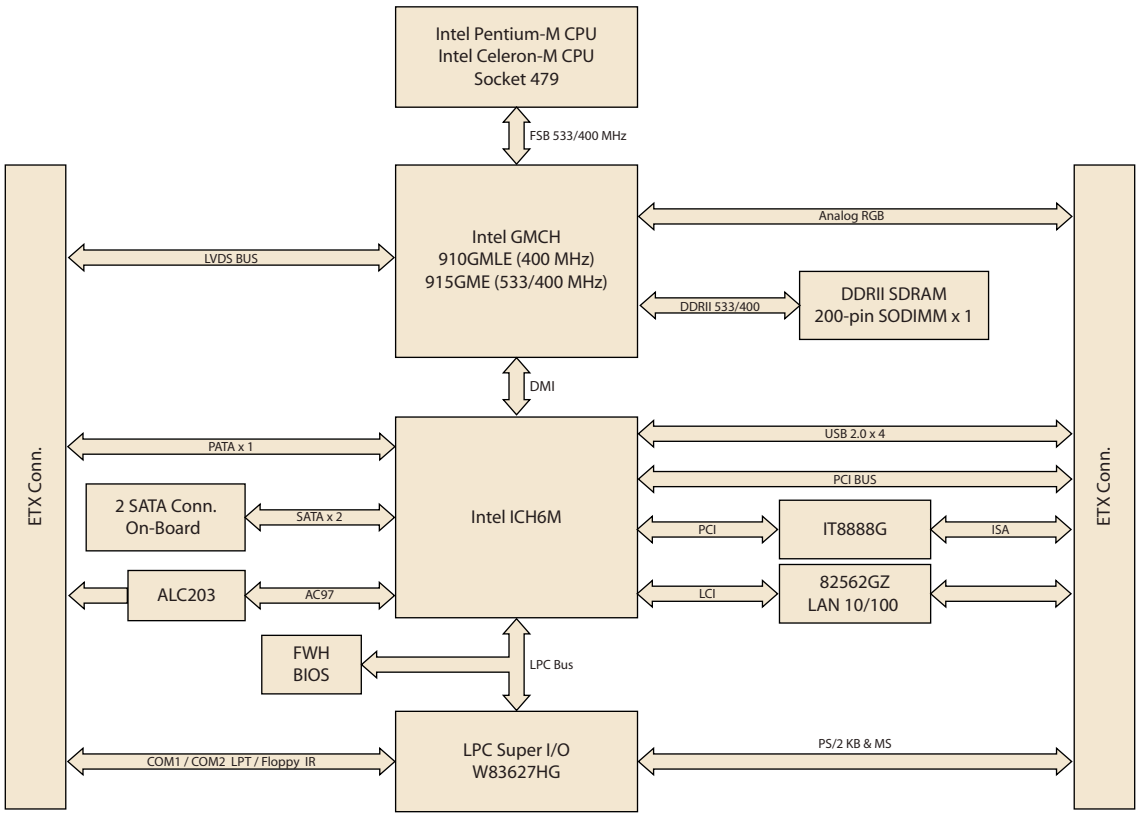

Ordering Information

Part No.	CPU	L2 Cache	Chipset	LVDS	VGA	10/100 LAN	AC97 Audio	PCI	USB 2.0	SATA	ATX Power	AT Power	Thermal Solution	Operating Temp.
SOM-4487FL-00A1E	Socket		915GME	2 x 18-bit	Yes	Yes	Yes	4	4	2	Yes	Yes	Active	0 ~ 60° C
SOM-4487FL-S4A1E	Pentium M LV 738	2 MB	915GME	2 x 18-bit	Yes	Yes	Yes	4	4	2	Yes	Yes	Active	0 ~ 60° C
SOM-4487FL-S1A1E	Celeron M 373	512 KB	910GMLE	2 x 18-bit	Yes	Yes	Yes	4	4	2	Yes	Yes	Passive	0 ~ 60° C
SOM-4487FL-M0A1E	Celeron M 600 MHz	512 KB	910GMLE	2 x 18-bit	Yes	Yes	Yes	4	4	2	Yes	Yes	Passive	0 ~ 60° C
SOM-4487FL-S0A1E	Celeron M 1 GHz	0 KB	910GMLE	2 x 18-bit	Yes	Yes	Yes	4	4	2	Yes	Yes	Passive	0 ~ 60° C

Development Board

Part No.	Description
SOM-DB4400-00A2E	Development Board for ETX Rev.A2
SOM-DB4700-00A1E	Development Board for ETX Rev.A1

Optional Accessories

Part No.	Description
1960012091T00S	Semi-Heatsink 114 x 96 x 15 mm
1750001980	Semi-Cooler 114 x 96 x 15 mm 12 V Fan

Packing List

Part No.	Description	Quantity
	SOM-4487 CPU Module	1
	Utility CD	1
1960028600N00B	Heatspreader (SOM-4487FL-00A1E only)	1
1960028601N00B	Heatspreader (SOM-4487FL-M0A1E, SOM-4487FL-S0A1E, SOM-4487FL-S1A1E, SOM-4487FL-S4A1E)	1

Embedded OS

OS	Part No.	Description
WinCE 6.0 Pro	2070007811	CE60 Pro Intel (852/855/915/945) 2COM V1.2 ENG
QNX 6.4.1		BSP ready

Value-Added Software Services

Software API: An interface that defines the ways by which an application program may request services from libraries and/or operating systems. Provides not only the underlying drivers required but also a rich set of user-friendly, intelligent and integrated interfaces, which speeds development, enhances security and offers add-on value for Advantech platforms. It plays the role of catalyst between developer and solution, and makes Advantech embedded platforms easier and simpler to adopt and operate with customer applications.

Software APIs

Control



GPIO

General Purpose Input/Output is a flexible parallel interface that allows a variety of custom connections. It allows users to monitor the level of signal input or set the output status to switch on/off a device. Our API also provides Programmable GPIO, which allows developers to dynamically set the GPIO input or output status.



SMBus

SMBus is the System Management Bus defined by Intel® Corporation in 1995. It is used in personal computers and servers for low-speed system management communications. The SMBus API allows a developer to interface a embedded system environment and transfer serial messages using the SMBus protocols, allowing multiple simultaneous device control.



I²C

I²C is a bi-directional two wire bus that was developed by Philips for use in their televisions in the 1980s. The I²C API allows a developer to interface with an embedded system environment and transfer serial messages using the I²C protocols, allowing multiple simultaneous device control.

Monitor



Watchdog

A watchdog timer (WDT) is a device that performs a specific operation after a certain period of time if something goes wrong and the system does not recover on its own. A watchdog timer can be programmed to perform a warm boot (restarting the system) after a certain number of seconds.



Hardware Monitor

The Hardware Monitor (HWM) API is a system health supervision API that inspects certain condition indexes, such as fan speed, temperature and voltage.



Hardware Control

The Hardware Control API allows developers to set the PWM (Pulse Width Modulation) value to adjust fan speed or other devices; it can also be used to adjust the LCD brightness.

Display



Brightness Control

The Brightness Control API allows a developer to interface with an embedded device to easily control brightness.



Backlight

The Backlight API allows a developer to control the backlight (screen) on/off in an embedded device.

Power Saving



CPU Speed

Make use of Intel SpeedStep technology to reduce power power consumption. The system will automatically adjust the CPU Speed depending on system loading.



System Throttling

Refers to a series of methods for reducing power consumption in computers by lowering the clock frequency. These APIs allow the user to lower the clock from 87.5% to 12.5%.

Software Utilities

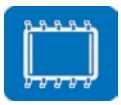

BIOS Flash

The BIOS Flash utility allows customers to update the flash ROM BIOS version, or use it to back up current BIOS by copying it from the flash chip to a file on customers' disk. The BIOS Flash utility also provides a command line version and API for fast implementation into customized applications.



Embedded Security ID

The embedded application is the most important property of a system integrator. It contains valuable intellectual property, design knowledge and innovation, but it is easily copied! The Embedded Security ID utility provides reliable security functions for customers to secure their application data within embedded BIOS.



Monitoring

The Monitoring utility allows the customer to monitor system health, including voltage, CPU and system temperature and fan speed. These items are important to a device; if critical errors happen and are not solved immediately, permanent damage may be caused.



eSOS

The eSOS is a small OS stored in BIOS ROM. It will boot up in case of a main OS crash. It will diagnose the hardware status, and then send an e-mail to a designated administrator. The eSOS also provides remote connection: Telnet server and FTP server, allowing the administrator to rescue the system.



Flash Lock

Flash Lock is a mechanism that binds the board and CF card (SQFlash) together. The user can "Lock" SQFlash via the Flash Lock function and "Unlock" it via BIOS while booting. A locked SQFlash cannot be read by any card reader or boot from other platforms without a BIOS with the "Unlock" feature.