

KLIXON® | S Series (SLA, SDLA, SDLM)

35 to 150 Amp Commercial Thermal Circuit Breaker

FEATURES

- 30VDC, 35 to 150 Amps
- Open and sealed assemblies, manual and automatic reset options
- Ignition protected
- UL Recognized E69772

DESCRIPTION

The KLIXON® S series thermal breakers are designed to protect wiring and meet the harshest environmental requirements. The sealed circuit breakers are weatherproof for protection against moisture, dust, grease, fuel vapors and other harsh environments. The S series breakers are lightweight and designed to interrupt short circuits or overloads and combine trip-free protection with fast response time. Typical applications are protection of wire and cable of accessory circuits, equipment and battery protection on heavy trucks, buses, construction equipment, off-road vehicles, marine, recreational vehicles (RVs) and electric (hybrid) vehicles, and battery chargers.

The S series is available in both open and sealed body configurations with manual and automatic reset options.

ORDERING INFORMATION

X – X – X

Configuration
SLA = Auto, open unit
SDLA = Auto, sealed unit
SDLM = Manual, sealed unit

Amp Rating
(35, 40, 45, 50, 60, 70, 80, 90, 100, 105, 120, 135, 150)

Mounting Nuts
= None
I = Optional mounting nuts

PERFORMANCE CHARACTERISTICS

Calibration : 200% rated current, 77°F (25°C)	35 to 150 Amps : 8 to 100 seconds
Ultimate Trip At 77°F (25°C)	Must hold 100%, Must trip 135%
Endurance	Per SAE J1625
Interrupt Current Capacity	Per SAE J1625 and ABYC E-11
Mechanical Vibration	Per SAE J1455, 4G's, 10-2K Hz
Voltage Breakdown	Per SAE J1625 500VAC
Salt Spray	Per SAE J1625, 96 hours
Voltage Drop	Per SAE J1625
Weight (with mounting nuts)	SDLM (A) : 75 grams (71 grams) max SLA : 62 grams max

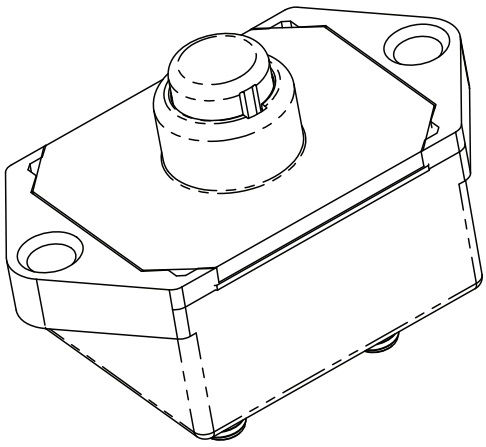

TRIP CURVE - Approximate Time, Current Characteristics At 77°F (25°C)

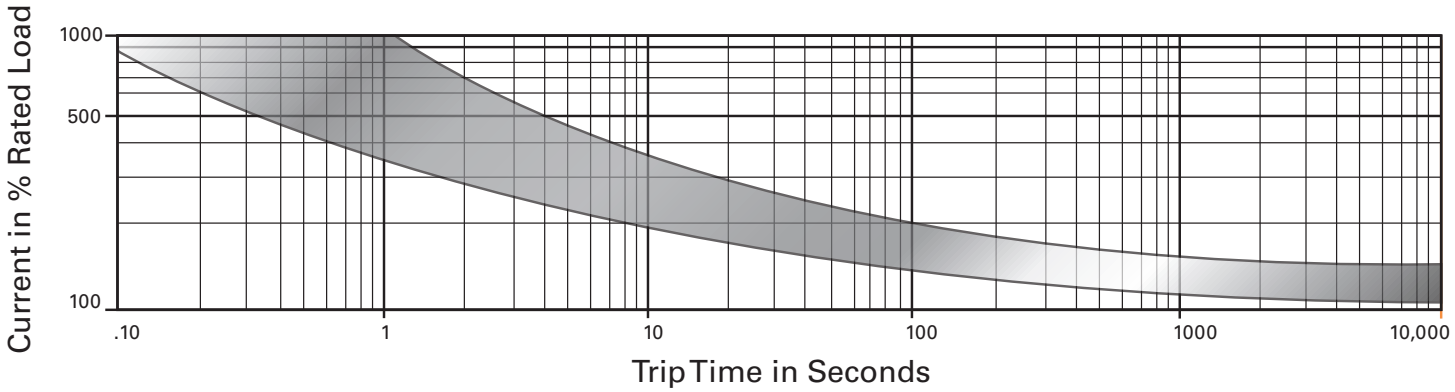

DIMENSIONS - SDLM

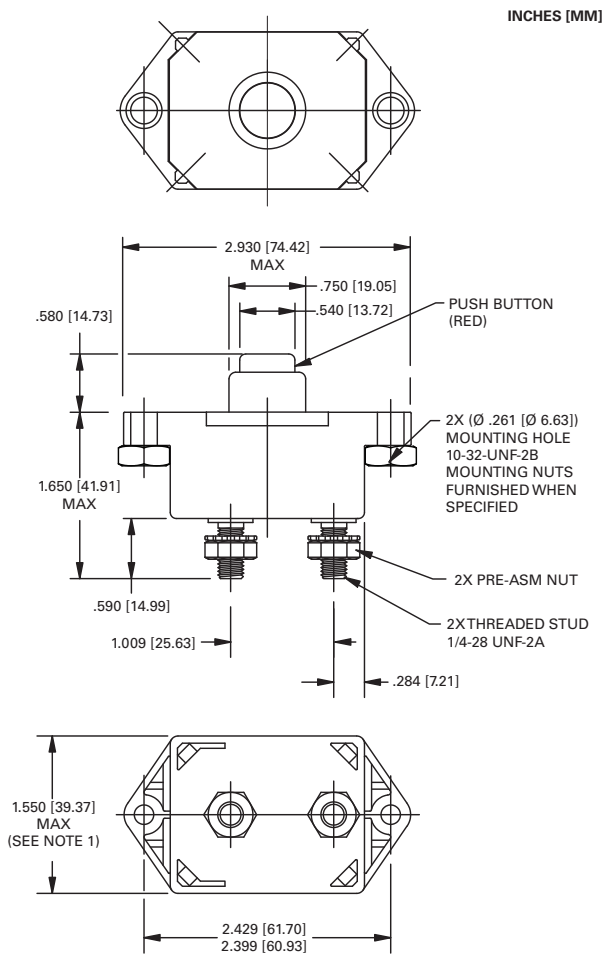

DERATING CURVE

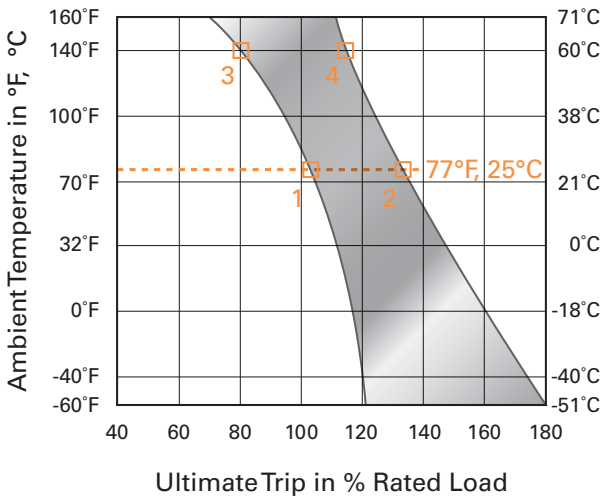

Performance characteristics are based on room temperature (77°F, 25°C). Consult Derating curve for ambient temperatures significantly higher or lower than standard room temperature.

Example: At 77°F (25°C) the device is calibrated to hold at 100% of rated current (1) and trip at 135% of rated current (2). At 140°F (60°C), the same device will hold at approximately 78% of rated current (3), and trip at approximately 115% of rated current (4).

Notes:
1. Dimension does not include sealing gasket.

BUSINESS CENTER

http://www.sensata.com/

Sensata Technologies Inc.
529 Pleasant Street
Attleboro, MA 02703, USA
Phone: +1 508-236-3800
Fax: +1 508-236-2349

Sensata Technologies

The World Depends on Sensors and Controls

©2013 Sensata Technologies, Inc. All rights reserved worldwide. Printed in USA, revised April 2013.

Important Notice: Sensata Technologies reserves the right to make changes to, or to discontinue, any product or service identified in this publication without notice. Before placing orders, users should obtain the latest version of the relevant information to verify that the information being relied upon is current.

Sensata Technologies assumes no responsibility for customers' product designs or applications. Users must determine the suitability of the Sensata device described in this publication for their application, including the level of reliability required. Many factors beyond Sensata's control can affect the use and performance of a Sensata product in a particular application, including the conditions under which the product is used and the time and environmental conditions in which the product is expected to perform. As these factors are uniquely within the user's knowledge and control, it is essential that the user evaluate the Sensata product to determine whether it is fit for a particular purpose and suitable for the user's application.

Sensata Technologies products are sold subject to Sensata's Terms and Conditions of Sale which can be found at: www.sensata.com/terms.htm