1/4" x 1-1/4" Fuseblocks
S-8000 Series

Description

- For 1/4" x 1-1/4" (6.3mm x 32mm) fuses
- Bolt-in and snap-in mounting available
- Tight cluster mounting
- All types of terminal configurations
- Clips made of spring-bronze
- Anti-rotational pin provided
- Flame retardant thermoplastic meets UL 94 VO

Environmental Data

- Temperature Rating (RTI): The mounting body for all devices (except those with Suffix –1-SNP or –W-SNP), has a temperature rating of 130°C. The mounting body for all devices with Suffix –1-SNP has a temperature rating of 110°C.

RoHS 2002/95/EC

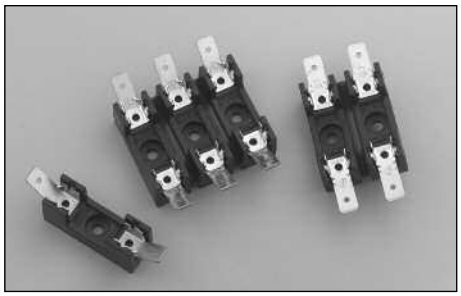

Multiple Pole

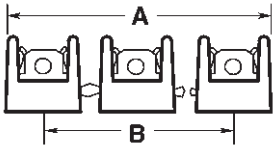

SPECIFICATIONS		
	Voltage Rating AC	Voltage Rating DC
S-8000	300V	300V
S-8100	300V	300V
S-8200	300V	300V
S-8300	300V	300V

Dimensions				
No. of Poles	Inches A	Inches B	Millimeters A	Millimeters B
1	*	*	*	*
2	1 1/8"	5/8"	28.6	15.9
3	1 3/4"	1 1/4"	44.4	31.8
4	2 3/8"	1 7/8"	60.3	47.6
5	3"	2 1/2"	76.2	63.5
6	3 5/8"	3 1/8"	92.1	79.4
7	4 1/4"	3 3/4"	108	95.2
8	4 7/8"	4 3/8"	123.8	111.1
9	5 1/2"	5"	139.7	127.0
10	6 1/8"	5 5/8"	155.6	142.9
11	6 3/4"	6 1/4"	171.4	158.8
12	7 3/8"	6 7/8"	187.3	174.6

Dimensions
S-8000 Single Pole Bolt-In Mounting Series

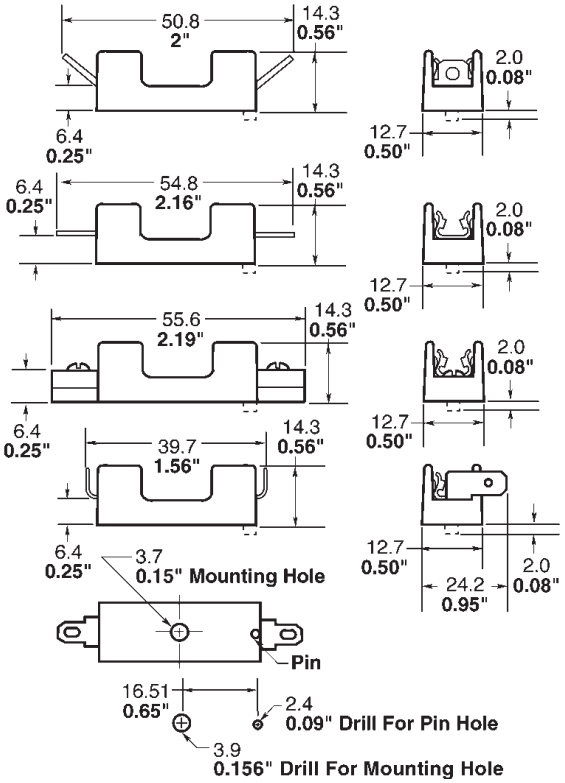

Component	Material
Clip	Spring-Bronze, Bright Tin-Lead Plate
Body	Thermoplastic

S-8000 Single Pole Snap-In Mounting Series

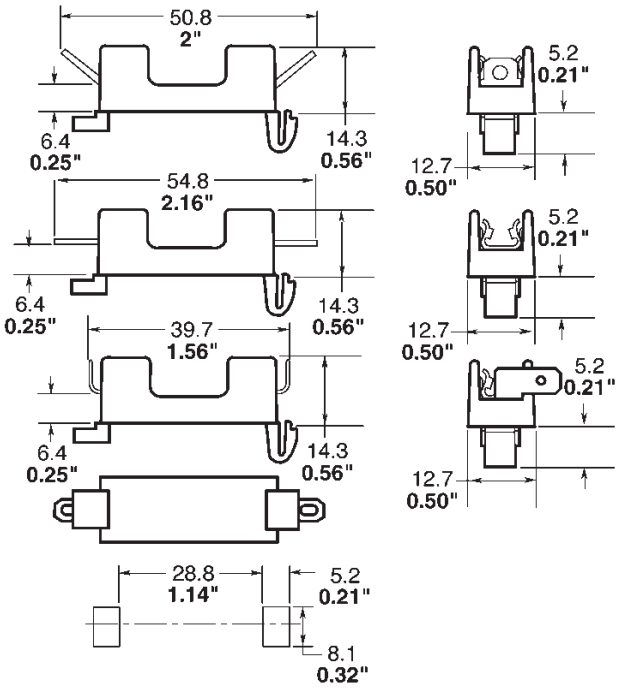

PACKAGING CODE	
Packaging Code	**Description**
Blank	Varies with number of poles. Contact customer service.
BK/	Varies with number of poles. Contact customer service.

Ordering

- Specify packaging, product, and option code

Example: BK/S-8001-01-SNP

BK/	S-8	0	01	–	01	–	SNP	-R
↓	↓	↓	↓		↓		↓	↓
1	2	3	4		5		6	7

1. Packaging Code: BK/
2. Series Number: S-8
3. Type Terminal: 0 = Solder
   1 = 3/16" Quick Connect
   2 = 1/4" Quick Connect
   3 = Screw
4. Terminal Angle: 01 = Straight (0°)
   02 = 40° Angle
   03 = Side*
5. Number of Poles: (01 – 12)
   1X = One pole, No Mounting Stud
6. Mounting Style: SNP = Snap-in Mounting
7. RoHS Compliant Version -R

*Available only in single pole

Visit us on the web at:
www.cooperbussmann.com

North America

Cooper Electronic Technologies
1225 Broken Sound Parkway NW
Suite F
Boca Raton, FL 33487-3533
Tel: 1-561-998-4100
Fax: 1-561-241-6640
Toll Free: 1-888-414-2645

Cooper Bussmann
P.O. Box 14460
St. Louis, MO 63178-4460
Tel: 1-636-394-2877
Fax: 1-800-544-2570

Europe

Cooper Electronic Technologies
Cooper (UK) Limited
Burton-on-the-Wolds
Leicestershire • LE12 5TH UK
Tel: +44 (0) 1509 882 737
Fax: +44 (0) 1509 882 786

Cooper Electronic Technologies
Avda. Santa Eulalia, 290
08223
Terrassa, (Barcelona), Spain
Tel: +34 937 362 812
+34 937 362 813
Fax: +34 937 362 719

Asia Pacific

Cooper Electronic Technologies
1 Jalan Kilang Timor
#06-01 Pacific Tech Centre
Singapore 159303
Tel: +65 278 6151
Fax: +65 270 4160