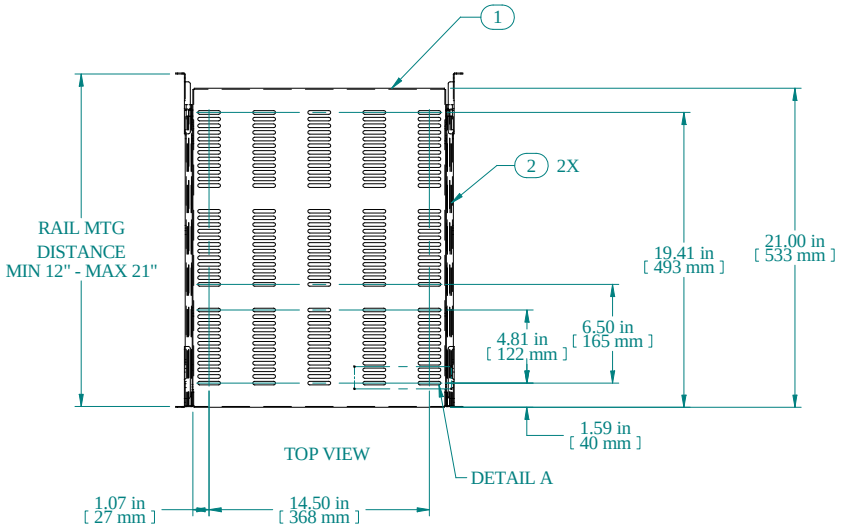

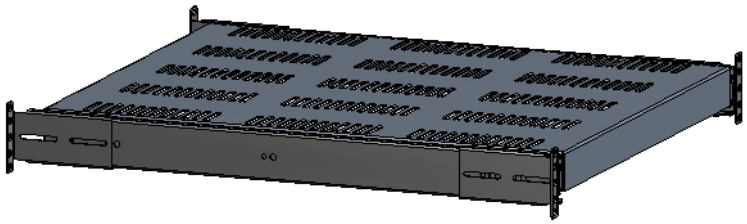

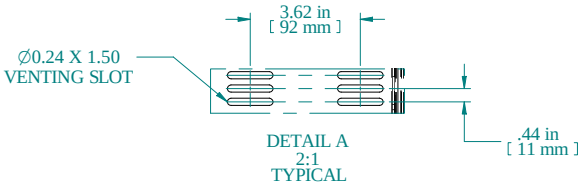

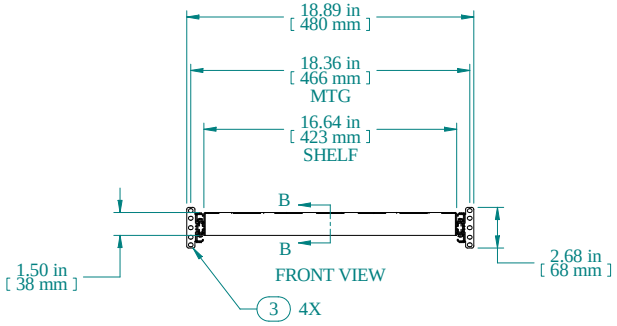

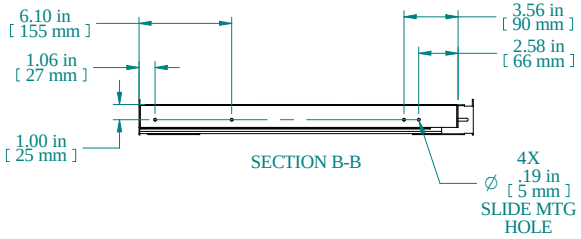

Item Number	Title	Quantity
1	RS - VENTED SHELF	1
2	SLIDE - 20" FULL TRAVEL	2
3	SLIDE MTG BRACKET	4

PART NUMBERS	
RSVS1921BK1	PAINTED BLACK TEXTURED
RSVS1921CG1	PAINTED GREY/BEIGE TEXTURED

NOTES
Maximum Weight 120 lb
Some Assembly Required
Slide Assembly Hardware Omitted for Clarity

Data subject to change without notice. Isometric drawing not to scale.

HAMMOND MANUFACTURING™

www.hammondmfg.com

PART NO. RSVS1921