RP2040 Datasheet

A microcontroller
by Raspberry Pi

Colophon

© 2020-2025 Raspberry Pi Ltd (formerly Raspberry Pi (Trading) Ltd.)

This documentation is licensed under a Creative Commons Attribution-NoDerivatives 4.0 International (CC BY-ND).

Portions Copyright © 2019 Synopsys, Inc.

All rights reserved. Used with permission. Synopsys & DesignWare are registered trademarks of Synopsys, Inc.

Portions Copyright © 2000-2001, 2005, 2007, 2009, 2011-2012, 2016 Arm Limited.

All rights reserved. Used with permission.

build-date: 2025-02-20
build-version: 3184e62-clean

Legal disclaimer notice

TECHNICAL AND RELIABILITY DATA FOR RASPBERRY PI PRODUCTS (INCLUDING DATASHEETS) AS MODIFIED FROM TIME TO TIME ("RESOURCES") ARE PROVIDED BY RASPBERRY PI LTD ("RPL") "AS IS" AND ANY EXPRESS OR IMPLIED WARRANTIES, INCLUDING, BUT NOT LIMITED TO, THE IMPLIED WARRANTIES OF MERCHANTABILITY AND FITNESS FOR A PARTICULAR PURPOSE ARE DISCLAIMED. TO THE MAXIMUM EXTENT PERMITTED BY APPLICABLE LAW IN NO EVENT SHALL RPL BE LIABLE FOR ANY DIRECT, INDIRECT, INCIDENTAL, SPECIAL, EXEMPLARY, OR CONSEQUENTIAL DAMAGES (INCLUDING, BUT NOT LIMITED TO, PROCUREMENT OF SUBSTITUTE GOODS OR SERVICES; LOSS OF USE, DATA, OR PROFITS; OR BUSINESS INTERRUPTION) HOWEVER CAUSED AND ON ANY THEORY OF LIABILITY, WHETHER IN CONTRACT, STRICT LIABILITY, OR TORT (INCLUDING NEGLIGENCE OR OTHERWISE) ARISING IN ANY WAY OUT OF THE USE OF THE RESOURCES, EVEN IF ADVISED OF THE POSSIBILITY OF SUCH DAMAGE.

RPL reserves the right to make any enhancements, improvements, corrections or any other modifications to the RESOURCES or any products described in them at any time and without further notice.

The RESOURCES are intended for skilled users with suitable levels of design knowledge. Users are solely responsible for their selection and use of the RESOURCES and any application of the products described in them. User agrees to indemnify and hold RPL harmless against all liabilities, costs, damages or other losses arising out of their use of the RESOURCES.

RPL grants users permission to use the RESOURCES solely in conjunction with the Raspberry Pi products. All other use of the RESOURCES is prohibited. No licence is granted to any other RPL or other third party intellectual property right.

HIGH RISK ACTIVITIES. Raspberry Pi products are not designed, manufactured or intended for use in hazardous environments requiring fail safe performance, such as in the operation of nuclear facilities, aircraft navigation or communication systems, air traffic control, weapons systems or safety-critical applications (including life support systems and other medical devices), in which the failure of the products could lead directly to death, personal injury or severe physical or environmental damage ("High Risk Activities"). RPL specifically disclaims any express or implied warranty of fitness for High Risk Activities and accepts no liability for use or inclusions of Raspberry Pi products in High Risk Activities.

Raspberry Pi products are provided subject to RPL's Standard Terms. RPL's provision of the RESOURCES does not expand or otherwise modify RPL's Standard Terms including but not limited to the disclaimers and warranties expressed in them.

Table of contents

Colophon . . . 1
Legal disclaimer notice . . . 1
1. Introduction . . . 8
1.1. Why is the chip called RP2040? . . . 8
1.2. Summary . . . 9
1.3. The Chip . . . 9
1.4. Pinout Reference . . . 10
1.4.1. Pin Locations . . . 10
1.4.2. Pin Descriptions . . . 11
1.4.3. GPIO Functions . . . 12
2. System Description . . . 14
2.1. Bus Fabric . . . 14
2.1.1. AHB-Lite Crossbar . . . 15
2.1.2. Atomic Register Access . . . 17
2.1.3. APB Bridge . . . 17
2.1.4. Narrow IO Register Writes . . . 17
2.1.5. List of Registers . . . 18
2.2. Address Map . . . 24
2.2.1. Summary . . . 24
2.2.2. Detail . . . 24
2.3. Processor subsystem . . . 26
2.3.1. SIO . . . 27
2.3.2. Interrupts . . . 60
2.3.3. Event Signals . . . 61
2.3.4. Debug . . . 61
2.4. Cortex-M0+ . . . 62
2.4.1. Features . . . 62
2.4.2. Functional Description . . . 64
2.4.3. Programmer's model . . . 68
2.4.4. System control . . . 73
2.4.5. NVIC . . . 74
2.4.6. MPU . . . 76
2.4.7. Debug . . . 76
2.4.8. List of Registers . . . 77
2.5. DMA . . . 91
2.5.1. Configuring Channels . . . 91
2.5.2. Starting Channels . . . 93
2.5.3. Data Request (DREQ) . . . 95
2.5.4. Interrupts . . . 96
2.5.5. Additional Features . . . 96
2.5.6. Example Use Cases . . . 97
2.5.7. List of Registers . . . 101
2.6. Memory . . . 120
2.6.1. ROM . . . 120
2.6.2. SRAM . . . 121
2.6.3. Flash . . . 122
2.7. Boot Sequence . . . 128
2.8. Bootrom . . . 128
2.8.1. Processor Controlled Boot Sequence . . . 129
2.8.2. Launching Code On Processor Core 1 . . . 131
2.8.3. Bootrom Contents . . . 132
2.8.4. USB Mass Storage Interface . . . 143
2.8.5. USB PICOBOOT Interface . . . 144
2.9. Power Supplies . . . 150
2.9.1. Digital IO Supply (IOVDD) . . . 151

2.9.2. Digital Core Supply (DVDD) . . . 151
2.9.3. On-Chip Voltage Regulator Input Supply (VREG_VIN) . . . 151
2.9.4. USB PHY Supply (USB_VDD) . . . 151
2.9.5. ADC Supply (ADC_AVDD) . . . 152
2.9.6. Power Supply Sequencing . . . 152
2.9.7. Power Supply Schemes . . . 152
2.10. Core Supply Regulator . . . 155
2.10.1. Application Circuit . . . 155
2.10.2. Operating Modes . . . 156
2.10.3. Output Voltage Select . . . 157
2.10.4. Status . . . 157
2.10.5. Current Limit . . . 157
2.10.6. List of Registers . . . 157
2.10.7. Detailed Specifications . . . 160
2.11. Power Control . . . 160
2.11.1. Top-level Clock Gates . . . 160
2.11.2. SLEEP State . . . 161
2.11.3. DORMANT State . . . 161
2.11.4. Memory Power Down . . . 161
2.11.5. Programmer's Model . . . 162
2.12. Chip-Level Reset . . . 163
2.12.1. Overview . . . 163
2.12.2. Power-on Reset . . . 164
2.12.3. Brown-out Detection . . . 165
2.12.4. Supply Monitor . . . 167
2.12.5. External Reset . . . 167
2.12.6. Rescue Debug Port Reset . . . 167
2.12.7. Source of Last Reset . . . 168
2.12.8. List of Registers . . . 168
2.13. Power-On State Machine . . . 168
2.13.1. Overview . . . 168
2.13.2. Power On Sequence . . . 168
2.13.3. Register Control . . . 169
2.13.4. Interaction with Watchdog . . . 169
2.13.5. List of Registers . . . 169
2.14. Subsystem Resets . . . 172
2.14.1. Overview . . . 172
2.14.2. Programmer's Model . . . 173
2.14.3. List of Registers . . . 175
2.15. Clocks . . . 178
2.15.1. Overview . . . 178
2.15.2. Clock sources . . . 179
2.15.3. Clock Generators . . . 183
2.15.4. Frequency Counter . . . 186
2.15.5. Resus . . . 187
2.15.6. Programmer's Model . . . 187
2.15.7. List of Registers . . . 194
2.16. Crystal Oscillator (XOSC) . . . 216
2.16.1. Overview . . . 216
2.16.2. Usage . . . 217
2.16.3. Startup Delay . . . 217
2.16.4. XOSC Counter . . . 217
2.16.5. DORMANT mode . . . 218
2.16.6. Programmer's Model . . . 218
2.16.7. List of Registers . . . 219
2.17. Ring Oscillator (ROSC) . . . 221
2.17.1. Overview . . . 221
2.17.2. ROSC/XOSC trade-offs . . . 222
2.17.3. Modifying the frequency . . . 222
2.17.4. ROSC divider . . . 223

2.17.5. Random Number Generator . . . 223
2.17.6. ROSC Counter . . . 223
2.17.7. DORMANT mode . . . 223
2.17.8. List of Registers . . . 224
2.18. PLL . . . 228
2.18.1. Overview . . . 228
2.18.2. Calculating PLL parameters . . . 228
2.18.3. Configuration . . . 232
2.18.4. List of Registers . . . 234
2.19. GPIO . . . 236
2.19.1. Overview . . . 236
2.19.2. Function Select . . . 237
2.19.3. Interrupts . . . 239
2.19.4. Pads . . . 240
2.19.5. Software Examples . . . 241
2.19.6. List of Registers . . . 244
2.20. Sysinfo . . . 305
2.20.1. Overview . . . 305
2.20.2. List of Registers . . . 305
2.21. Syscfg . . . 306
2.21.1. Overview . . . 306
2.21.2. List of Registers . . . 306
2.22. TBMAN . . . 309
2.22.1. List of Registers . . . 309
3. PIO . . . 311
3.1. Overview . . . 311
3.2. Programmer's Model . . . 312
3.2.1. PIO Programs . . . 312
3.2.2. Control Flow . . . 313
3.2.3. Registers . . . 314
3.2.4. Stalling . . . 317
3.2.5. Pin Mapping . . . 318
3.2.6. IRQ Flags . . . 318
3.2.7. Interactions Between State Machines . . . 318
3.3. PIO Assembler (pioasm) . . . 319
3.3.1. Directives . . . 319
3.3.2. Values . . . 320
3.3.3. Expressions . . . 320
3.3.4. Comments . . . 320
3.3.5. Labels . . . 320
3.3.6. Instructions . . . 321
3.3.7. Pseudoinstructions . . . 321
3.4. Instruction Set . . . 321
3.4.1. Summary . . . 321
3.4.2. JMP . . . 322
3.4.3. WAIT . . . 323
3.4.4. IN . . . 324
3.4.5. OUT . . . 325
3.4.6. PUSH . . . 326
3.4.7. PULL . . . 327
3.4.8. MOV . . . 328
3.4.9. IRQ . . . 329
3.4.10. SET . . . 330
3.5. Functional Details . . . 331
3.5.1. Side-set . . . 331
3.5.2. Program Wrapping . . . 332
3.5.3. FIFO Joining . . . 334
3.5.4. Autopush and Autopull . . . 335
3.5.5. Clock Dividers . . . 339
3.5.6. GPIO Mapping . . . 340

3.5.7. Forced and EXEC'd Instructions . . . 342
3.6. Examples . . . 344
3.6.1. Duplex SPI . . . 344
3.6.2. WS2812 LEDs . . . 348
3.6.3. UART TX . . . 350
3.6.4. UART RX . . . 352
3.6.5. Manchester Serial TX and RX . . . 355
3.6.6. Differential Manchester (BMC) TX and RX . . . 357
3.6.7. I2C . . . 361
3.6.8. PWM . . . 364
3.6.9. Addition . . . 366
3.6.10. Further Examples . . . 367
3.7. List of Registers . . . 368
4. Peripherals . . . 383
4.1. USB . . . 383
4.1.1. Overview . . . 383
4.1.2. Architecture . . . 384
4.1.3. Programmer's Model . . . 394
4.1.4. List of Registers . . . 398
References . . . 417
4.2. UART . . . 417
4.2.1. Overview . . . 417
4.2.2. Functional description . . . 418
4.2.3. Operation . . . 420
4.2.4. UART hardware flow control . . . 422
4.2.5. UART DMA Interface . . . 424
4.2.6. Interrupts . . . 425
4.2.7. Programmer's Model . . . 427
4.2.8. List of Registers . . . 429
4.3. I2C . . . 440
4.3.1. Features . . . 440
4.3.2. IP Configuration . . . 441
4.3.3. I2C Overview . . . 441
4.3.4. I2C Terminology . . . 443
4.3.5. I2C Behaviour . . . 444
4.3.6. I2C Protocols . . . 445
4.3.7. Tx FIFO Management and START, STOP and RESTART Generation . . . 448
4.3.8. Multiple Master Arbitration . . . 450
4.3.9. Clock Synchronization . . . 451
4.3.10. Operation Modes . . . 452
4.3.11. Spike Suppression . . . 457
4.3.12. Fast Mode Plus Operation . . . 458
4.3.13. Bus Clear Feature . . . 458
4.3.14. IC_CLK Frequency Configuration . . . 459
4.3.15. DMA Controller Interface . . . 463
4.3.16. Operation of Interrupt Registers . . . 464
4.3.17. List of Registers . . . 464
4.4. SPI . . . 501
4.4.1. Overview . . . 502
4.4.2. Functional Description . . . 502
4.4.3. Operation . . . 505
4.4.4. List of Registers . . . 515
4.5. PWM . . . 521
4.5.1. Overview . . . 521
4.5.2. Programmer's Model . . . 522
4.5.3. List of Registers . . . 529
4.6. Timer . . . 534
4.6.1. Overview . . . 534
4.6.2. Counter . . . 535
4.6.3. Alarms . . . 535

4.6.4. Programmer's Model . . . 536
4.6.5. List of Registers . . . 539
4.7. Watchdog . . . 544
4.7.1. Overview . . . 544
4.7.2. Tick generation . . . 544
4.7.3. Watchdog Counter . . . 545
4.7.4. Scratch Registers . . . 545
4.7.5. Programmer's Model . . . 545
4.7.6. List of Registers . . . 547
4.8. RTC . . . 548
4.8.1. Storage Format . . . 548
4.8.2. Leap year . . . 549
4.8.3. Interrupts . . . 549
4.8.4. Reference clock . . . 549
4.8.5. Programmer's Model . . . 550
4.8.6. List of Registers . . . 553
4.9. ADC and Temperature Sensor . . . 557
4.9.1. ADC controller . . . 558
4.9.2. SAR ADC . . . 559
4.9.3. ADC ENOB . . . 561
4.9.4. INL and DNL . . . 562
4.9.5. Temperature Sensor . . . 563
4.9.6. List of Registers . . . 564
4.10. SSI . . . 567
4.10.1. Overview . . . 568
4.10.2. Features . . . 568
4.10.3. IP Modifications . . . 569
4.10.4. Clock Ratios . . . 570
4.10.5. Transmit and Receive FIFO Buffers . . . 571
4.10.6. 32-Bit Frame Size Support . . . 572
4.10.7. SSI Interrupts . . . 572
4.10.8. Transfer Modes . . . 573
4.10.9. Operation Modes . . . 574
4.10.10. Partner Connection Interfaces . . . 579
4.10.11. DMA Controller Interface . . . 595
4.10.12. APB Interface . . . 597
4.10.13. List of Registers . . . 598
5. Electrical and Mechanical . . . 607
5.1. Package . . . 607
5.1.1. Thermal characteristics . . . 608
5.1.2. Recommended PCB Footprint . . . 608
5.1.3. Package markings . . . 608
5.2. Storage conditions . . . 609
5.3. Solder profile . . . 609
5.4. Compliance . . . 611
5.5. Pinout . . . 611
5.5.1. Pin Locations . . . 611
5.5.2. Pin Definitions . . . 612
5.5.3. Pin Specifications . . . 614
5.6. Power Supplies . . . 622
5.7. Power Consumption . . . 622
5.7.1. Peripheral power consumption . . . 622
5.7.2. Power consumption for typical user cases . . . 623
Appendix A: Register Field Types . . . 625
Standard types . . . 625
RW: . . . 625
RO: . . . 625
WO: . . . 625
Clear types . . . 625
SC . . . 625

WC . . . 625
FIFO types . . . 626
RWF . . . 626
RF . . . 626
WF . . . 626
Appendix B: Errata . . . 627
Bootrom . . . 627
RP2040-E9 . . . 627
RP2040-E14 . . . 627
Clocks . . . 628
RP2040-E7 . . . 628
RP2040-E10 . . . 628
DMA . . . 629
RP2040-E12 . . . 629
RP2040-E13 . . . 629
GPIO / ADC . . . 630
RP2040-E6 . . . 630
RP2040-E11 . . . 630
USB . . . 630
RP2040-E2 . . . 630
RP2040-E3 . . . 631
RP2040-E4 . . . 631
RP2040-E5 . . . 631
RP2040-E15 . . . 633
RP2040-E16 . . . 634
Watchdog . . . 634
RP2040-E1 . . . 634
XIP Flash . . . 635
RP2040-E8 . . . 635
Appendix C: Availability . . . 636
Support . . . 636
Ordering code . . . 636
Documentation Release History . . . 637
20 February 2025 . . . 637
15 October 2024 . . . 637
02 May 2024 . . . 637
02 February 2024 . . . 637
14 June 2023 . . . 637
03 March 2023 . . . 637
01 December 2022 . . . 637
30 June 2022 . . . 638
17 June 2022 . . . 638
04 November 2021 . . . 638
03 November 2021 . . . 638
30 September 2021 . . . 638
23 June 2021 . . . 638
07 June 2021 . . . 639
13 April 2021 . . . 639
07 April 2021 . . . 639
05 March 2021 . . . 639
23 February 2021 . . . 639
01 February 2021 . . . 639
26 January 2021 . . . 639
21 January 2021 . . . 640

Chapter 1. Introduction

Microcontrollers connect the world of software to the world of hardware. They allow developers to write software which interacts with the physical world in the same deterministic, cycle-accurate manner as digital logic. They occupy the bottom left corner of the price/performance space, outselling their more powerful brethren by a factor of ten to one. They are the workhorses that power the digital transformation of our world.

RP2040 is the debut microcontroller from Raspberry Pi. It brings our signature values of high performance, low cost, and ease of use to the microcontroller space.

With a large on-chip memory, symmetric dual-core processor complex, deterministic bus fabric, and rich peripheral set augmented with our unique Programmable I/O (PIO) subsystem, it provides professional users with unrivalled power and flexibility. With detailed documentation, a polished MicroPython port, and a UF2 bootloader in ROM, it has the lowest possible barrier to entry for beginner and hobbyist users.

RP2040 is a stateless device, with support for cached execute-in-place from external QSPI memory. This design decision allows you to choose the appropriate density of non-volatile storage for your application, and to benefit from the low pricing of commodity Flash parts.

RP2040 is manufactured on a modern 40nm process node, delivering high performance, low dynamic power consumption, and low leakage, with a variety of low-power modes to support extended-duration operation on battery power.

Key features:

- Dual ARM Cortex-M0+ @ 133MHz
- 264kB on-chip SRAM in six independent banks
- Support for up to 16MB of off-chip Flash memory via dedicated QSPI bus
- DMA controller
- Fully-connected AHB crossbar
- Interpolator and integer divider peripherals
- On-chip programmable LDO to generate core voltage
- 2 on-chip PLLs to generate USB and core clocks
- 30 GPIO pins, 4 of which can be used as analogue inputs
- Peripherals
    - 2 UARTs
    - 2 SPI controllers
    - 2 I2C controllers
    - 16 PWM channels
    - USB 1.1 controller and PHY, with host and device support
    - 8 PIO state machines

Whatever your microcontroller application, from machine learning to motor control, from agriculture to audio, RP2040 has the performance, feature set, and support to make your product fly.

1.1. Why is the chip called RP2040?

The post-fix numeral on RP2040 comes from the following,

1. Number of processor cores (2)
2. Loosely which type of processor (M0+)
3. floor(log2(RAM / 16kB))
4. floor(log2(nonvolatile / 128kB)) or 0 if no onboard nonvolatile storage

see Figure 1.

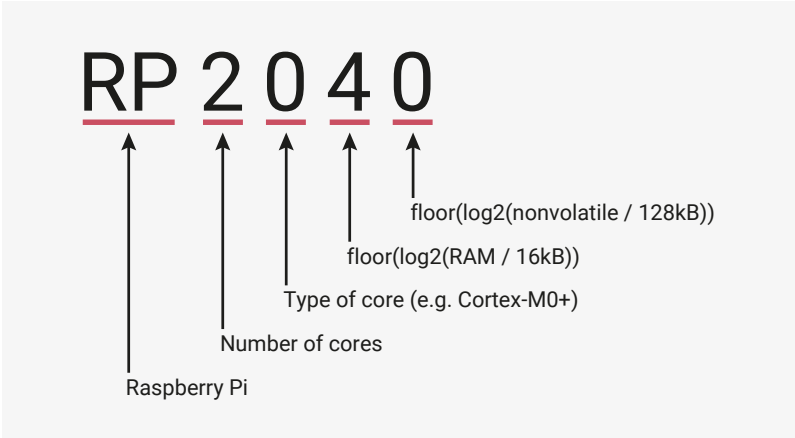

Figure 1. An explanation for the name of the RP2040 chip.

1.2. Summary

RP2040 is a low-cost, high-performance microcontroller device with flexible digital interfaces. Key features:

- Dual Cortex M0+ processor cores, up to 133MHz (or 200MHz at 1.15V, see Section 2.15.3)
- 264kB of embedded SRAM in 6 banks
- 30 multifunction GPIO
- 6 dedicated IO for SPI Flash (supporting XIP)
- Dedicated hardware for commonly used peripherals
- Programmable IO for extended peripheral support
- 4 channel ADC with internal temperature sensor, 500ksps, 12-bit conversion
- USB 1.1 Host/Device

1.3. The Chip

RP2040 has a dual M0+ processor cores, DMA, internal memory and peripheral blocks connected via AHB/APB bus fabric.

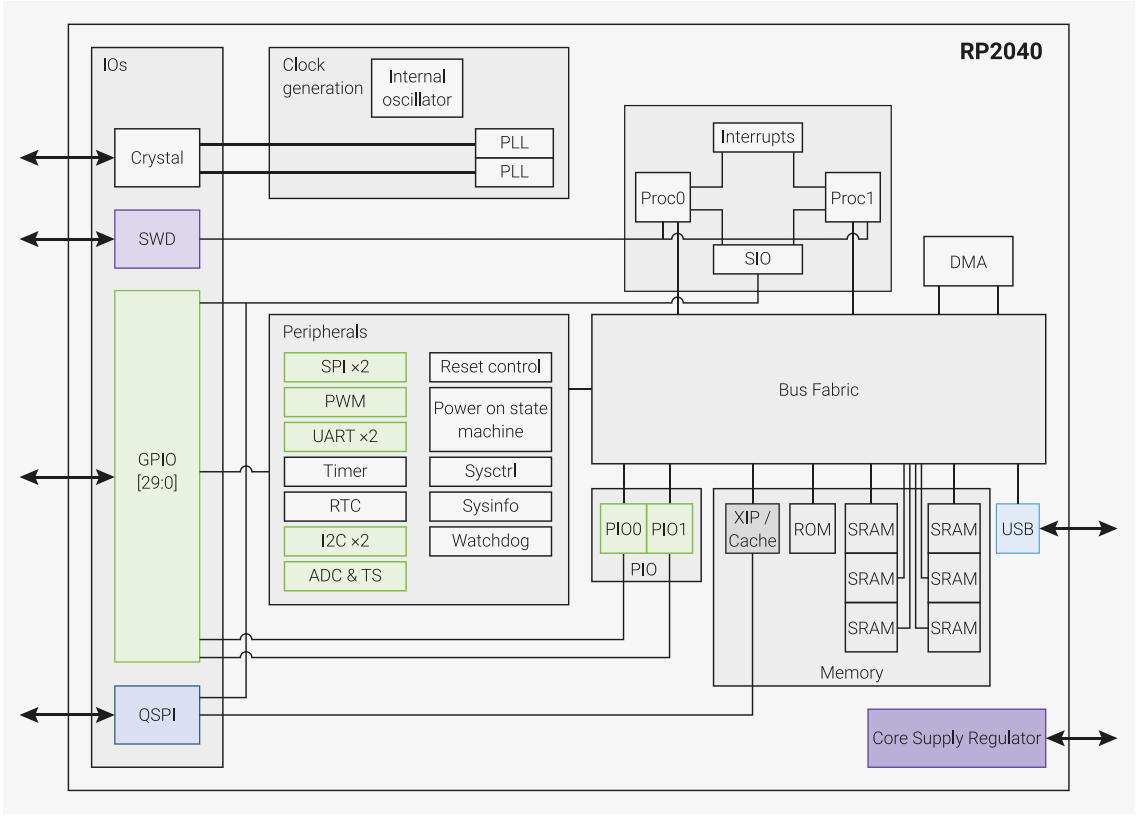

Figure 2. A system overview of the RP2040 chip

Code may be executed directly from external memory through a dedicated SPI, DSPI or QSPI interface. A small cache improves performance for typical applications.

Debug is available via the SWD interface.

Internal SRAM can contain code or data. It is addressed as a single 264 kB region, but physically partitioned into 6 banks to allow simultaneous parallel access from different masters.

DMA bus masters are available to offload repetitive data transfer tasks from the processors.

GPIO pins can be driven directly, or from a variety of dedicated logic functions.

Dedicated hardware for fixed functions such as SPI, I2C, UART.

Flexible configurable PIO controllers can be used to provide a wide variety of IO functions.

A USB controller with embedded PHY can be used to provide FS/LS Host or Device connectivity under software control.

Four ADC inputs which are shared with GPIO pins.

Two PLLs to provide a fixed 48MHz clock for USB or ADC, and a flexible system clock up to 133MHz.

An internal Voltage Regulator to supply the core voltage so the end product only needs supply the IO voltage.

1.4. Pinout Reference

This section provides a quick reference for pinout and pin functions. Full details, including electrical specifications and package drawings, can be found in Chapter 5.

1.4.1. Pin Locations

Figure 3. RP2040 Pinout for QFN-56 7×7mm (reduced ePad size)

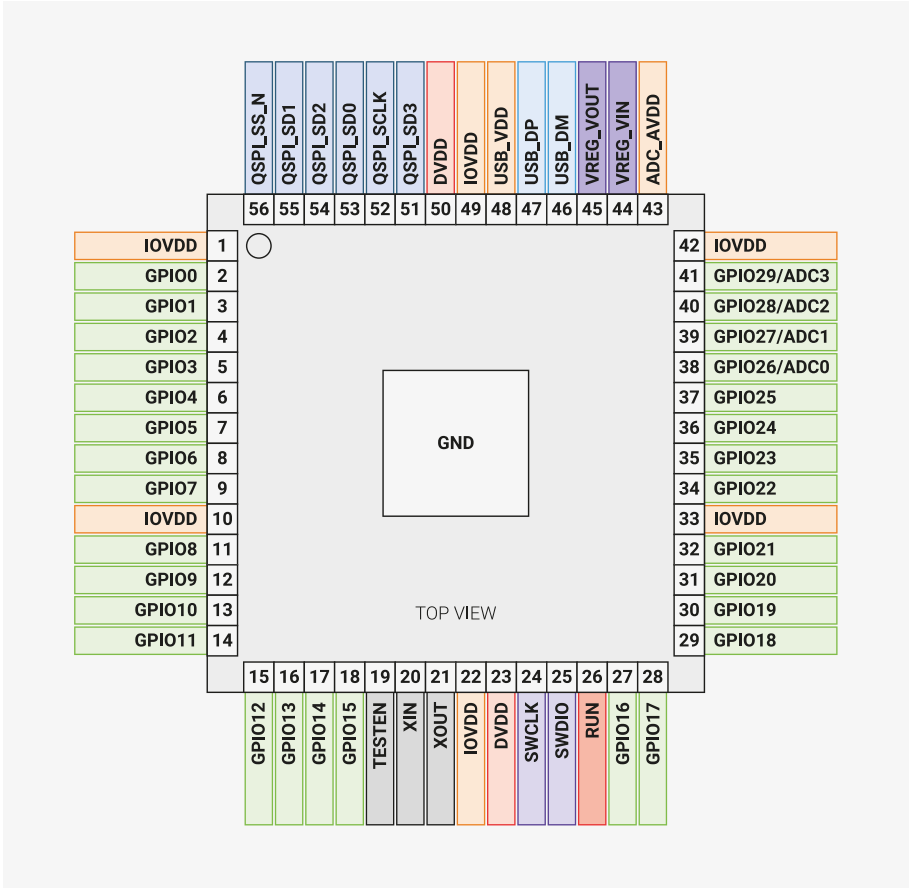

1.4.2. Pin Descriptions

Table 1. The function of each pin is briefly described here. Full electrical specifications can be found in Chapter 5.

Name	Description
GPIOx	General-purpose digital input and output. RP2040 can connect one of a number of internal peripherals to each GPIO, or control GPIOs directly from software.
GPIOx/ADCy	General-purpose digital input and output, with analogue-to-digital converter function. The RP2040 ADC has an analogue multiplexer which can select any one of these pins, and sample the voltage.
QSPIx	Interface to a SPI, Dual-SPI or Quad-SPI flash device, with execute-in-place support. These pins can also be used as software-controlled GPIOs, if they are not required for flash access.
USB_DM and USB_DP	USB controller, supporting Full Speed device and Full/Low Speed host. A 27Ω series termination resistor is required on each pin, but bus pull-ups and pull-downs are provided internally.
XIN and XOUT	Connect a crystal to RP2040's crystal oscillator. XIN can also be used as a single-ended CMOS clock input, with XOUT disconnected. The USB bootloader requires a 12MHz crystal or 12MHz clock input. For recommended crystals, see Crystal Oscillator (Section 2.16).
RUN	Global asynchronous reset pin. Reset when driven low, run when driven high. If no external reset is required, this pin can be tied directly to IOVDD.
SWCLK and SWDIO	Access to the internal Serial Wire Debug multi-drop bus. Provides debug access to both processors, and can be used to download code.
TESTEN	Factory test mode pin. Tie to GND.
GND	Single external ground connection, bonded to a number of internal ground pads on the RP2040 die.
IOVDD	Power supply for digital GPIOs, nominal voltage 1.8V to 3.3V

Name	Description
USB_VDD	Power supply for internal USB Full Speed PHY, nominal voltage 3.3V
ADC_AVDD	Power supply for analogue-to-digital converter, nominal voltage 3.3V
VREG_VIN	Power input for the internal core voltage regulator, nominal voltage 1.8V to 3.3V
VREG_VOUT	Power output for the internal core voltage regulator, nominal voltage 1.1V, 100mA max current
DVDD	Digital core power supply, nominal voltage 1.1V. Can be connected to VREG_VOUT, or to some other board-level power supply.

1.4.3. GPIO Functions

Each individual GPIO pin can be connected to an internal peripheral via the GPIO functions defined below. Some internal peripheral connections appear in multiple places to allow some system level flexibility. SIO, PIO0 and PIO1 can connect to all GPIO pins and are controlled by software (or software controlled state machines) so can be used to implement many functions.

Table 2. General Purpose Input/Output (GPIO) Bank 0 Functions

	Function								
GPIO	F1	F2	F3	F4	F5	F6	F7	F8	F9
0	SPI0 RX	UART0 TX	I2C0 SDA	PWM0 A	SIO	PIO0	PIO1		USB OVCUR DET
1	SPI0 CSn	UART0 RX	I2C0 SCL	PWM0 B	SIO	PIO0	PIO1		USB VBUS DET
2	SPI0 SCK	UART0 CTS	I2C1 SDA	PWM1 A	SIO	PIO0	PIO1		USB VBUS EN
3	SPI0 TX	UART0 RTS	I2C1 SCL	PWM1 B	SIO	PIO0	PIO1		USB OVCUR DET
4	SPI0 RX	UART1 TX	I2C0 SDA	PWM2 A	SIO	PIO0	PIO1		USB VBUS DET
5	SPI0 CSn	UART1 RX	I2C0 SCL	PWM2 B	SIO	PIO0	PIO1		USB VBUS EN
6	SPI0 SCK	UART1 CTS	I2C1 SDA	PWM3 A	SIO	PIO0	PIO1		USB OVCUR DET
7	SPI0 TX	UART1 RTS	I2C1 SCL	PWM3 B	SIO	PIO0	PIO1		USB VBUS DET
8	SPI1 RX	UART1 TX	I2C0 SDA	PWM4 A	SIO	PIO0	PIO1		USB VBUS EN
9	SPI1 CSn	UART1 RX	I2C0 SCL	PWM4 B	SIO	PIO0	PIO1		USB OVCUR DET
10	SPI1 SCK	UART1 CTS	I2C1 SDA	PWM5 A	SIO	PIO0	PIO1		USB VBUS DET
11	SPI1 TX	UART1 RTS	I2C1 SCL	PWM5 B	SIO	PIO0	PIO1		USB VBUS EN
12	SPI1 RX	UART0 TX	I2C0 SDA	PWM6 A	SIO	PIO0	PIO1		USB OVCUR DET
13	SPI1 CSn	UART0 RX	I2C0 SCL	PWM6 B	SIO	PIO0	PIO1		USB VBUS DET
14	SPI1 SCK	UART0 CTS	I2C1 SDA	PWM7 A	SIO	PIO0	PIO1		USB VBUS EN
15	SPI1 TX	UART0 RTS	I2C1 SCL	PWM7 B	SIO	PIO0	PIO1		USB OVCUR DET
16	SPI0 RX	UART0 TX	I2C0 SDA	PWM0 A	SIO	PIO0	PIO1		USB VBUS DET
17	SPI0 CSn	UART0 RX	I2C0 SCL	PWM0 B	SIO	PIO0	PIO1		USB VBUS EN
18	SPI0 SCK	UART0 CTS	I2C1 SDA	PWM1 A	SIO	PIO0	PIO1		USB OVCUR DET
19	SPI0 TX	UART0 RTS	I2C1 SCL	PWM1 B	SIO	PIO0	PIO1		USB VBUS DET
20	SPI0 RX	UART1 TX	I2C0 SDA	PWM2 A	SIO	PIO0	PIO1	CLOCK GPIN0	USB VBUS EN
21	SPI0 CSn	UART1 RX	I2C0 SCL	PWM2 B	SIO	PIO0	PIO1	CLOCK GPOUT0	USB OVCUR DET

	Function								
22	SPI0 SCK	UART1 CTS	I2C1 SDA	PWM3 A	SIO	PIO0	PIO1	CLOCK GPIN1	USB VBUS DET
23	SPI0 TX	UART1 RTS	I2C1 SCL	PWM3 B	SIO	PIO0	PIO1	CLOCK GPOUT1	USB VBUS EN
24	SPI1 RX	UART1 TX	I2C0 SDA	PWM4 A	SIO	PIO0	PIO1	CLOCK GPOUT2	USB OVCUR DET
25	SPI1 CSn	UART1 RX	I2C0 SCL	PWM4 B	SIO	PIO0	PIO1	CLOCK GPOUT3	USB VBUS DET
26	SPI1 SCK	UART1 CTS	I2C1 SDA	PWM5 A	SIO	PIO0	PIO1		USB VBUS EN
27	SPI1 TX	UART1 RTS	I2C1 SCL	PWM5 B	SIO	PIO0	PIO1		USB OVCUR DET
28	SPI1 RX	UART0 TX	I2C0 SDA	PWM6 A	SIO	PIO0	PIO1		USB VBUS DET
29	SPI1 CSn	UART0 RX	I2C0 SCL	PWM6 B	SIO	PIO0	PIO1		USB VBUS EN

Table 3. GPIO bank 0 function descriptions

Function Name	Description
SPIx	Connect one of the internal PL022 SPI peripherals to GPIO
UARTx	Connect one of the internal PL011 UART peripherals to GPIO
I2Cx	Connect one of the internal DW I2C peripherals to GPIO
PWMx A/B	Connect a PWM slice to GPIO. There are eight PWM slices, each with two output channels (A/B). The B pin can also be used as an input, for frequency and duty cycle measurement.
SIO	Software control of GPIO, from the single-cycle IO (SIO) block. The SIO function (F5) must be selected for the processors to *drive* a GPIO, but the input is always connected, so software can check the state of GPIOs at any time.
PIOx	Connect one of the programmable IO blocks (PIO) to GPIO. PIO can implement a *wide* variety of interfaces, and has its own internal pin mapping hardware, allowing flexible placement of digital interfaces on bank 0 GPIOs. The PIO function (F6, F7) must be selected for PIO to *drive* a GPIO, but the input is always connected, so the PIOs can always see the state of all pins.
CLOCK GPINx	General purpose clock inputs. Can be routed to a number of internal clock domains on RP2040, e.g. to provide a 1Hz clock for the RTC, or can be connected to an internal frequency counter.
CLOCK GPOUTx	General purpose clock outputs. Can drive a number of internal clocks (including PLL outputs) onto GPIOs, with optional integer divide.
USB OVCUR DET/VBUS DET/VBUS EN	USB power control signals to/from the internal USB controller

Chapter 2. System Description

This chapter describes the RP2040 key system features including processor, memory, how blocks are connected, clocks, resets, power, and IO. Refer to Figure 2 for an overview diagram.

2.1. Bus Fabric

The RP2040 bus fabric routes addresses and data across the chip.

Figure 4 shows the high-level structure of the bus fabric. The main AHB-Lite crossbar routes addresses and data between its 4 upstream ports and 10 downstream ports: up to four bus transfers can take place each cycle. All data paths are 32 bits wide. Memory devices have dedicated ports on the main crossbar, to satisfy their high bandwidth requirements. High-bandwidth AHB-Lite peripherals have a shared port on the crossbar, and an APB bridge provides bus access to system control registers and lower-bandwidth peripherals.

Figure 4. RP2040 bus fabric overview.

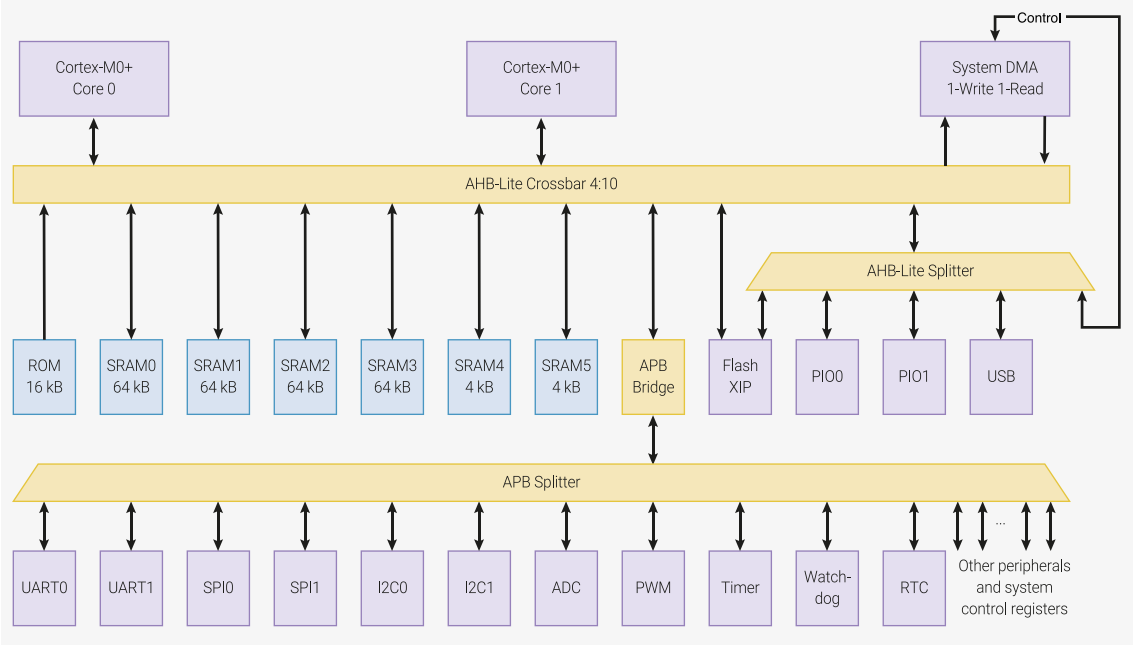

The bus fabric connects 4 AHB-Lite masters, i.e. devices which generate addresses:

- Processor core 0
- Processor core 1
- DMA controller Read port
- DMA controller Write port

These are routed through to 10 downstream ports on the main crossbar:

- ROM
- Flash XIP
- SRAM 0 to 5 (one port each)
- Fast AHB-Lite peripherals: PIO0, PIO1, USB, DMA control registers, XIP aux (one shared port)
- Bridge to all APB peripherals, and system control registers

The four bus masters can access any four *different* crossbar ports simultaneously, the bus fabric does not add wait

states to any AHB-Lite slave access. So at a system clock of 125MHz the maximum sustained bus bandwidth is 2.0GBps. The system address map has been arranged to make this parallel bandwidth available to as many software use cases as possible — for example, the striped SRAM alias (Section 2.6.2) scatters main memory accesses across four crossbar ports (SRAM0…3), so that more memory accesses can proceed in parallel.

2.1.1. AHB-Lite Crossbar

At the centre of the RP2040 bus fabric is a 4:10 fully-connected crossbar. Its 4 upstream ports are connected to the 4 system bus masters, and the 10 downstream ports connect to the highest-bandwidth AHB-Lite slaves (namely the memory interfaces) and to lower layers of the fabric. Figure 5 shows the structure of a 2:3 AHB-Lite crossbar, arranged identically to the 4:10 crossbar on RP2040, but easier to show in the diagram.

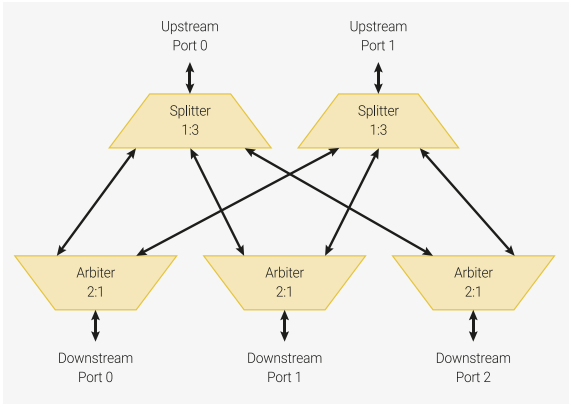

Figure 5. A 2:3 AHB-Lite crossbar. Each upstream port connects to a splitter, which routes bus requests toward one of the 3 downstream ports, and routes responses back. Each downstream port connects to an arbiter, which safely manages concurrent access to the port.

The crossbar is built from two components:

- Splitters
  - Perform coarse address decode
  - Route requests (addresses, write data) to the downstream port indicated by the initial address decode
  - Route responses (read data, bus errors) from the correct arbiter back to the upstream port
- Arbiters
  - Manage concurrent requests to a downstream port
  - Route responses (read data, bus errors) to the correct splitter
  - Implement bus priority rules

The main crossbar on RP2040 consists of 4 1:10 splitters and 10 4:1 arbiters, with a mesh of 40 AHB-Lite bus channels between them. Note that, as AHB-Lite is a pipelined bus, the splitter may be routing back a response to an earlier request from downstream port A, whilst a new request to downstream port B is already in progress. This does not incur any cycle penalty.

2.1.1.1. Bus Priority

The arbiters in the main AHB-Lite crossbar implement a two-level bus priority scheme. Priority levels are configured per-master, using the BUS_PRIORITY register in the BUSCTRL register block.

When there are multiple simultaneous accesses to same arbiter, any requests from high-priority masters (priority level 1) will be considered before any requests from low-priority masters (priority 0). If multiple masters of the same priority level attempt to access the same slave simultaneously, a round-robin tie break is applied, i.e. the arbiter grants access to each master in turn.

NOTE

Priority arbitration only applies to multiple masters attempting to access the **same** slave on the same cycle. Accesses to different slaves, e.g. different SRAM banks, can proceed simultaneously.

When accessing a slave with zero wait states, such as SRAM (i.e. can be accessed once per system clock cycle), high-priority masters will never observe any slowdown or other timing effects caused by accesses from low-priority masters. This allows *guaranteed* latency and throughput for hard real time use cases; it does however mean a low-priority master may get stalled until there is a free cycle.

2.1.1.2. Bus Performance Counters

The performance counters automatically count accesses to the main AHB-Lite crossbar arbiters. This can assist in diagnosing performance issues, in high-traffic use cases.

There are four performance counters. Each is a 24-bit saturating counter. Counter values can be read from `BUSCTRL_PERFCTRx`, and cleared by writing any value to `BUSCTRL_PERFCTRx`. Each counter can count one of the 20 available events at a time, as selected by `BUSCTRL_PERFSELx`. The available bus events are:

PERFSELx	Event	Description
0	APB access, contested	Completion of an access to the APB arbiter (which is upstream of all APB peripherals), which was previously delayed due to an access by another master.
1	APB access	Completion of an access to the APB arbiter
2	FASTPERI access, contested	Completion of an access to the FASTPERI arbiter (which is upstream of PIOs, DMA config port, USB, XIP aux FIFO port), which was previously delayed due to an access by another master.
3	FASTPERI access	Completion of an access to the FASTPERI arbiter
4	SRAM5 access, contested	Completion of an access to the SRAM5 arbiter, which was previously delayed due to an access by another master.
5	SRAM5 access	Completion of an access to the SRAM5 arbiter
6	SRAM4 access, contested	Completion of an access to the SRAM4 arbiter, which was previously delayed due to an access by another master.
7	SRAM4 access	Completion of an access to the SRAM4 arbiter
8	SRAM3 access, contested	Completion of an access to the SRAM3 arbiter, which was previously delayed due to an access by another master.
9	SRAM3 access	Completion of an access to the SRAM3 arbiter
10	SRAM2 access, contested	Completion of an access to the SRAM2 arbiter, which was previously delayed due to an access by another master.
11	SRAM2 access	Completion of an access to the SRAM2 arbiter
12	SRAM1 access, contested	Completion of an access to the SRAM1 arbiter, which was previously delayed due to an access by another master.
13	SRAM1 access	Completion of an access to the SRAM1 arbiter
14	SRAM0 access, contested	Completion of an access to the SRAM0 arbiter, which was previously delayed due to an access by another master.
15	SRAM0 access	Completion of an access to the SRAM0 arbiter

PERFSELx	Event	Description
16	XIP_MAIN access, contested	Completion of an access to the XIP_MAIN arbiter, which was previously delayed due to an access by another master.
17	XIP_MAIN access	Completion of an access to the XIP_MAIN arbiter
18	ROM access, contested	Completion of an access to the ROM arbiter, which was previously delayed due to an access by another master.
19	ROM access	Completion of an access to the ROM arbiter

2.1.2. Atomic Register Access

Each peripheral register block is allocated 4kB of address space, with registers accessed using one of 4 methods, selected by address decode.

- `Addr + 0x0000` : normal read write access
- `Addr + 0x1000` : atomic XOR on write
- `Addr + 0x2000` : atomic bitmask set on write
- `Addr + 0x3000` : atomic bitmask clear on write

This allows individual fields of a control register to be modified without performing a read-modify-write sequence in software: instead the changes are posted to the peripheral, and performed in-situ. Without this capability, it is difficult to safely access IO registers when an interrupt service routine is concurrent with code running in the foreground, or when the two processors are running code in parallel.

The four atomic access aliases occupy a total of 16kB. Most peripherals on RP2040 provide this functionality natively, and atomic writes have the same timing as normal read/write access. Some peripherals (I2C, UART, SPI and SSI) instead have this functionality added using a bus interposer, which translates upstream atomic writes into downstream read-modify-write sequences, at the boundary of the peripheral. This extends the access time by two system clock cycles.

The SIO (Section 2.3.1), a single-cycle IO block attached directly to the cores' IO ports, does **not** support atomic accesses at the bus level, although some individual registers (e.g. GPIO) have set/clear/xor aliases.

2.1.3. APB Bridge

The APB bridge interfaces the high-speed main AHB-Lite interconnect to the lower-bandwidth peripherals. Whilst the AHB-Lite fabric offers zero-wait-state access everywhere, APB accesses have a cycle penalty:

- APB bus accesses take two cycles minimum (setup phase and access phase)
- The bridge adds an additional cycle to read accesses, as the bus request and response are registered
- The bridge adds **two** additional cycles to write accesses, as the APB setup phase can not begin until the AHB-Lite write data is valid

As a result, the throughput of the APB portion of the bus fabric is somewhat lower than the AHB-Lite portion. However, there is more than sufficient bandwidth to saturate the APB serial peripherals.

2.1.4. Narrow IO Register Writes

Memory-mapped IO registers on RP2040 ignore the width of bus read/write accesses. They treat all writes as though they were 32 bits in size. This means software can not use byte or halfword writes to modify part of an IO register: any write to an address where the 30 address MSBs match the register address will affect the contents of the entire

register.

To update part of an IO register, without a read-modify-write sequence, the best solution on RP2040 is atomic set/clear/XOR (see Section 2.1.2). Note that this is more flexible than byte or halfword writes, as any combination of fields can be updated in one operation.

Upon a 8-bit or 16-bit write (such as a `strb` instruction on the Cortex-M0+), an IO register will sample the entire 32-bit write databus. The Cortex-M0+ and DMA on RP2040 will always replicate narrow data across the bus:

Pico Examples: https://github.com/raspberrypi/pico-examples/blob/master/system/narrow_io_write/narrow_io_write.c Lines 19 - 62

```
19 int main() {
20     stdio_init_all();
21
22     // We'll use WATCHDOG_SCRATCH0 as a convenient 32 bit read/write register
23     // that we can assign arbitrary values to
24     io_rw_32 *scratch32 = &watchdog_hw->scratch[0];
25     // Alias the scratch register as two halfwords at offsets +0x0 and +0x2
26     volatile uint16_t *scratch16 = (volatile uint16_t *) scratch32;
27     // Alias the scratch register as four bytes at offsets +0x0, +0x1, +0x2, +0x3:
28     volatile uint8_t *scratch8 = (volatile uint8_t *) scratch32;
29
30     // Show that we can read/write the scratch register as normal:
31     printf("Writing 32 bit value\n");
32     *scratch32 = 0xdeadbeef;
33     printf("Should be 0xdeadbeef: 0x%08x\n", *scratch32);
34
35     // We can do narrow reads just fine -- IO registers treat this as a 32 bit
36     // read, and the processor/DMA will pick out the correct byte lanes based
37     // on transfer size and address LSBs
38     printf("\nReading back 1 byte at a time\n");
39     // Little-endian!
40     printf("Should be ef be ad de: %02x ", scratch8[0]);
41     printf("%02x ", scratch8[1]);
42     printf("%02x ", scratch8[2]);
43     printf("%02x\n", scratch8[3]);
44
45     // Byte writes are replicated four times across the 32-bit bus, and IO
46     // registers usually sample the entire write bus.
47     printf("\nWriting 8 bit value 0xa5 at offset 0\n");
48     scratch8[0] = 0xa5;
49     // Read back the whole scratch register in one go
50     printf("Should be 0xa5a5a5a5: 0x%08x\n", *scratch32);
51
52     // The IO register ignores the address LSBs [1:0] as well as the transfer
53     // size, so it doesn't matter what byte offset we use
54     printf("\nWriting 8 bit value at offset 1\n");
55     scratch8[1] = 0x3c;
56     printf("Should be 0x3c3c3c3c: 0x%08x\n", *scratch32);
57
58     // Halfword writes are also replicated across the write data bus
59     printf("\nWriting 16 bit value at offset 0\n");
60     scratch16[0] = 0xf00d;
61     printf("Should be 0xf00df00d: 0x%08x\n", *scratch32);
62 }
```

2.1.5. List of Registers

The Bus Fabric registers start at a base address of `0x40030000` (defined as BUSCTRL_BASE in SDK).

Table 4. List of BUSCTRL registers

Offset	Name	Info
0x00	BUS_PRIORITY	Set the priority of each master for bus arbitration.
0x04	BUS_PRIORITY_ACK	Bus priority acknowledge
0x08	PERFCTR0	Bus fabric performance counter 0
0x0c	PERFSEL0	Bus fabric performance event select for PERFCTR0
0x10	PERFCTR1	Bus fabric performance counter 1
0x14	PERFSEL1	Bus fabric performance event select for PERFCTR1
0x18	PERFCTR2	Bus fabric performance counter 2
0x1c	PERFSEL2	Bus fabric performance event select for PERFCTR2
0x20	PERFCTR3	Bus fabric performance counter 3
0x24	PERFSEL3	Bus fabric performance event select for PERFCTR3

BUSCTRL: BUS_PRIORITY Register

Offset: 0x00

Description

Set the priority of each master for bus arbitration.

Table 5. BUS_PRIORITY Register

Bits	Description	Type	Reset
31:13	Reserved.	-	-
12	**DMA_W**: 0 - low priority, 1 - high priority	RW	0x0
11:9	Reserved.	-	-
8	**DMA_R**: 0 - low priority, 1 - high priority	RW	0x0
7:5	Reserved.	-	-
4	**PROC1**: 0 - low priority, 1 - high priority	RW	0x0
3:1	Reserved.	-	-
0	**PROC0**: 0 - low priority, 1 - high priority	RW	0x0

BUSCTRL: BUS_PRIORITY_ACK Register

Offset: 0x04

Description

Bus priority acknowledge

Table 6. BUS_PRIORITY_ACK Register

Bits	Description	Type	Reset
31:1	Reserved.	-	-
0	Goes to 1 once all arbiters have registered the new global priority levels. Arbiters update their local priority when servicing a new nonsequential access. In normal circumstances this will happen almost immediately.	RO	0x0

BUSCTRL: PERFCTR0 Register

Offset: 0x08

Description

Bus fabric performance counter 0

Table 7. PERFCTR0 Register

Bits	Description	Type	Reset
31:24	Reserved.	-	-
23:0	Busfabric saturating performance counter 0 Count some event signal from the busfabric arbiters. Write any value to clear. Select an event to count using PERFSEL0	WC	0x000000

BUSCTRL: PERFSEL0 Register

Offset: 0x0c

Description

Bus fabric performance event select for PERFCTR0

Table 8. PERFSEL0 Register

Bits	Description	Type	Reset
31:5	Reserved.	-	-
4:0	Select an event for PERFCTR0. Count either contested accesses, or all accesses, on a downstream port of the main crossbar.	RW	0x1f
	Enumerated values:		
	0x00 → APB_CONTESTED		
	0x01 → APB		
	0x02 → FASTPERI_CONTESTED		
	0x03 → FASTPERI		
	0x04 → SRAM5_CONTESTED		
	0x05 → SRAM5		
	0x06 → SRAM4_CONTESTED		
	0x07 → SRAM4		
	0x08 → SRAM3_CONTESTED		
	0x09 → SRAM3		
	0x0a → SRAM2_CONTESTED		
	0x0b → SRAM2		
	0x0c → SRAM1_CONTESTED		
	0x0d → SRAM1		
	0x0e → SRAM0_CONTESTED		
	0x0f → SRAM0		
	0x10 → XIP_MAIN_CONTESTED		
	0x11 → XIP_MAIN		
	0x12 → ROM_CONTESTED		
	0x13 → ROM		

BUSCTRL: PERFCTR1 Register

Offset: 0x10

Description

Bus fabric performance counter 1

Table 9. PERFCTR1 Register

Bits	Description	Type	Reset
31:24	Reserved.	-	-
23:0	Busfabric saturating performance counter 1 Count some event signal from the busfabric arbiters. Write any value to clear. Select an event to count using PERFSEL1	WC	0x000000

BUSCTRL: PERFSEL1 Register

Offset: 0x14

Description

Bus fabric performance event select for PERFCTR1

Table 10. PERFSEL1 Register

Bits	Description	Type	Reset
31:5	Reserved.	-	-
4:0	Select an event for PERFCTR1. Count either contested accesses, or all accesses, on a downstream port of the main crossbar.	RW	0x1f
	Enumerated values:		
	0x00 → APB_CONTESTED		
	0x01 → APB		
	0x02 → FASTPERI_CONTESTED		
	0x03 → FASTPERI		
	0x04 → SRAM5_CONTESTED		
	0x05 → SRAM5		
	0x06 → SRAM4_CONTESTED		
	0x07 → SRAM4		
	0x08 → SRAM3_CONTESTED		
	0x09 → SRAM3		
	0x0a → SRAM2_CONTESTED		
	0x0b → SRAM2		
	0x0c → SRAM1_CONTESTED		
	0x0d → SRAM1		
	0x0e → SRAM0_CONTESTED		
	0x0f → SRAM0		
	0x10 → XIP_MAIN_CONTESTED		
	0x11 → XIP_MAIN		
	0x12 → ROM_CONTESTED		
	0x13 → ROM		

BUSCTRL: PERFCTR2 Register

Offset: 0x18

Description

Bus fabric performance counter 2

Table 11. PERFCTR2 Register

Bits	Description	Type	Reset
31:24	Reserved.	-	-
23:0	Busfabric saturating performance counter 2 Count some event signal from the busfabric arbiters. Write any value to clear. Select an event to count using PERFSEL2	WC	0x000000

BUSCTRL: PERFSEL2 Register

Offset: 0x1c

Description

Bus fabric performance event select for PERFCTR2

Table 12. PERFSEL2 Register

Bits	Description	Type	Reset
31:5	Reserved.	-	-
4:0	Select an event for PERFCTR2. Count either contested accesses, or all accesses, on a downstream port of the main crossbar.	RW	0x1f
	Enumerated values:		
	0x00 → APB_CONTESTED		
	0x01 → APB		
	0x02 → FASTPERI_CONTESTED		
	0x03 → FASTPERI		
	0x04 → SRAM5_CONTESTED		
	0x05 → SRAM5		
	0x06 → SRAM4_CONTESTED		
	0x07 → SRAM4		
	0x08 → SRAM3_CONTESTED		
	0x09 → SRAM3		
	0x0a → SRAM2_CONTESTED		
	0x0b → SRAM2		
	0x0c → SRAM1_CONTESTED		
	0x0d → SRAM1		
	0x0e → SRAM0_CONTESTED		
	0x0f → SRAM0		
	0x10 → XIP_MAIN_CONTESTED		
	0x11 → XIP_MAIN		
	0x12 → ROM_CONTESTED		

Bits	Description	Type	Reset
	0x13 → ROM		

BUSCTRL: PERFCTR3 Register

Offset: 0x20

Description

Bus fabric performance counter 3

Table 13. PERFCTR3 Register

Bits	Description	Type	Reset
31:24	Reserved.	-	-
23:0	Busfabric saturating performance counter 3 Count some event signal from the busfabric arbiters. Write any value to clear. Select an event to count using PERFSEL3	WC	0x000000

BUSCTRL: PERFSEL3 Register

Offset: 0x24

Description

Bus fabric performance event select for PERFCTR3

Table 14. PERFSEL3 Register

Bits	Description	Type	Reset
31:5	Reserved.	-	-
4:0	Select an event for PERFCTR3. Count either contested accesses, or all accesses, on a downstream port of the main crossbar.	RW	0x1f
	Enumerated values:		
	0x00 → APB_CONTESTED		
	0x01 → APB		
	0x02 → FASTPERI_CONTESTED		
	0x03 → FASTPERI		
	0x04 → SRAM5_CONTESTED		
	0x05 → SRAM5		
	0x06 → SRAM4_CONTESTED		
	0x07 → SRAM4		
	0x08 → SRAM3_CONTESTED		
	0x09 → SRAM3		
	0x0a → SRAM2_CONTESTED		
	0x0b → SRAM2		
	0x0c → SRAM1_CONTESTED		
	0x0d → SRAM1		
	0x0e → SRAM0_CONTESTED		
	0x0f → SRAM0		
	0x10 → XIP_MAIN_CONTESTED		

Bits	Description	Type	Reset
	0x11 → XIP_MAIN		
	0x12 → ROM_CONTESTED		
	0x13 → ROM		

2.2. Address Map

The address map for the device is split in to sections as shown in Table 15. Details are shown in the following sections. Unmapped address ranges raise a bus error when accessed.

2.2.1. Summary

Table 15. Address Map Summary

ROM	0x00000000
XIP	0x10000000
SRAM	0x20000000
APB Peripherals	0x40000000
AHB-Lite Peripherals	0x50000000
IOPORT Registers	0xd0000000
Cortex-M0+ internal registers	0xe0000000

2.2.2. Detail

ROM:

ROM_BASE	0x00000000

XIP:

XIP_BASE	0x10000000
XIP_NOALLOC_BASE	0x11000000
XIP_NOCACHE_BASE	0x12000000
XIP_NOCACHE_NOALLOC_BASE	0x13000000
XIP_CTRL_BASE	0x14000000
XIP_SRAM_BASE	0x15000000
XIP_SRAM_END	0x15004000
XIP_SSI_BASE	0x18000000

SRAM. SRAM0-3 striped:

SRAM_BASE	0x20000000
SRAM_STRIPED_BASE	0x20000000

SRAM_STRIPED_END	0x20040000

SRAM 4-5 are always non-striped:

SRAM4_BASE	0x20040000
SRAM5_BASE	0x20041000
SRAM_END	0x20042000

Non-striped aliases of SRAM0-3:

SRAM0_BASE	0x21000000
SRAM1_BASE	0x21010000
SRAM2_BASE	0x21020000
SRAM3_BASE	0x21030000

APB Peripherals:

SYSINFO_BASE	0x40000000
SYSCFG_BASE	0x40004000
CLOCKS_BASE	0x40008000
RESETS_BASE	0x4000c000
PSM_BASE	0x40010000
IO_BANK0_BASE	0x40014000
IO_QSPI_BASE	0x40018000
PADS_BANK0_BASE	0x4001c000
PADS_QSPI_BASE	0x40020000
XOSC_BASE	0x40024000
PLL_SYS_BASE	0x40028000
PLL_USB_BASE	0x4002c000
BUSCTRL_BASE	0x40030000
UART0_BASE	0x40034000
UART1_BASE	0x40038000
SPI0_BASE	0x4003c000
SPI1_BASE	0x40040000
I2C0_BASE	0x40044000
I2C1_BASE	0x40048000
ADC_BASE	0x4004c000
PWM_BASE	0x40050000
TIMER_BASE	0x40054000
WATCHDOG_BASE	0x40058000
RTC_BASE	0x4005c000

ROSC_BASE	0x40060000
VREG_AND_CHIP_RESET_BASE	0x40064000
TBMAN_BASE	0x4006c000

AHB-Lite peripherals:

DMA_BASE	0x50000000

USB has a DPRAM at its base followed by registers:

USBCTRL_BASE	0x50100000
USBCTRL_DPRAM_BASE	0x50100000
USBCTRL_REGS_BASE	0x50110000

Remaining AHB-Lite peripherals:

PIO0_BASE	0x50200000
PIO1_BASE	0x50300000
XIP_AUX_BASE	0x50400000

IOPORT Peripherals:

SIO_BASE	0xd0000000

Cortex-M0+ Internal Peripherals:

PPB_BASE	0xe0000000

2.3. Processor subsystem

The RP2040 processor subsystem consists of two Arm Cortex-M0+ processors — each with its standard internal Arm CPU peripherals — alongside external peripherals for GPIO access and inter-core communication. Details of the Arm Cortex-M0+ processors, including the specific feature configuration used on RP2040, can be found in Section 2.4.

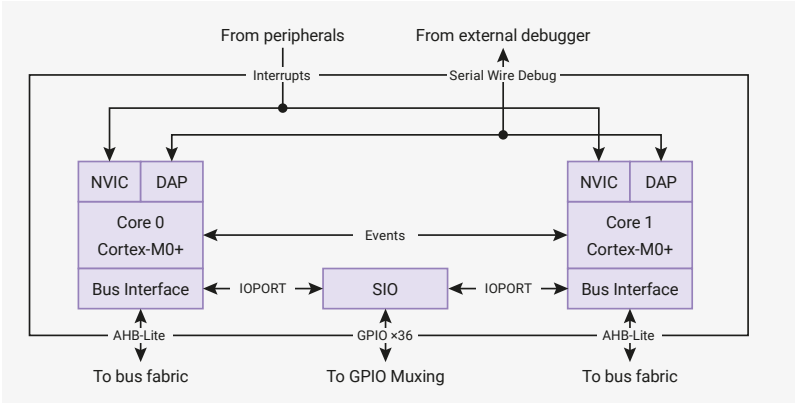

Figure 6. Two Cortex-M0+ processors, each with a dedicated 32-bit AHB-Lite bus port, for code fetch, loads and stores. The SIO is connected to the single-cycle IOPORT bus of each processor, and provides GPIO access, two-way communications, and other core-local peripherals. Both processors can be debugged via a single multi-drop Serial Wire Debug bus. 26 interrupts (plus NMI) are routed to the NVIC and WIC on each processor.

NOTE

The terms *core0* and *core1*, *proc0* and *proc1* are used interchangeably in RP2040's registers and documentation to refer to processor 0, and processor 1 respectively.

The processors use a number of interfaces to communicate with the rest of the system:

- Each processor uses its own independent 32-bit AHB-Lite bus to access memory and memory-mapped peripherals (more detail in Section 2.1)
- The single-cycle IO block provides high-speed, deterministic access to GPIOs via each processor's IOPORT
- 26 system-level interrupts are routed to both processors
- A multi-drop Serial Wire Debug bus provides debug access to both processors from an external debug host

2.3.1. SIO

The Single-cycle IO block (SIO) contains several peripherals that require low-latency, deterministic access from the processors. It is accessed via each processor's IOPORT: this is an auxiliary bus port on the Cortex-M0+ which can perform rapid 32-bit reads and writes. The SIO has a dedicated bus interface for each processor's IOPORT, as shown in Figure 7. Processors access their IOPORT with normal load and store instructions, directed to the special IOPORT address segment, `0xd0000000···0xdfffffff`. The SIO appears as memory-mapped hardware within the IOPORT space.

NOTE

The SIO is not connected to the main system bus due to its tight timing requirements. It can only be accessed by the processors, or by the debugger via the processor debug ports.

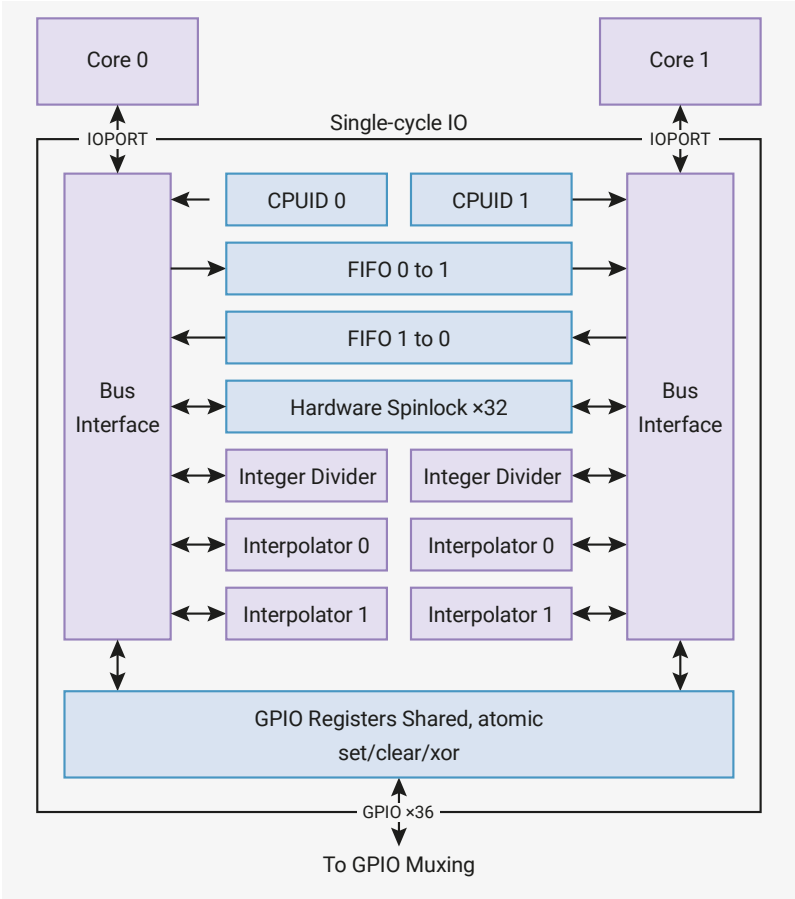

Figure 7. The single-cycle IO block contains memory-mapped hardware which the processors must be able to access quickly. The FIFOs and spinlocks support message passing and synchronisation between the two cores. The shared GPIO registers provide fast and concurrency-safe direct access to GPIO-capable pins. Some core-local arithmetic hardware can be used to accelerate common tasks on the processors.

All IOPORT reads and writes (and therefore all SIO accesses) take place in exactly one cycle, unlike the main AHB-Lite system bus, where the Cortex-M0+ requires two cycles for a load or store, and may have to wait longer due to contention from other system bus masters. This is vital for interfaces such as GPIO, which have tight timing requirements.

SIO registers are mapped to word-aligned addresses in the range `0xd0000000···0xd000017c`. The remainder of the IOPORT space is reserved for future use.

The SIO peripherals are described in more detail in the following sections.

2.3.1.1. CPUID

The register CPUID is the first register in the IOPORT space. Core 0 reads a value of 0 when accessing this address, and core 1 reads a value of 1. This is a convenient method for software to determine on which core it is running. This is checked during the initial boot sequence: both cores start running simultaneously, core 1 goes into a deep sleep state, and core 0 continues with the main boot sequence.

IMPORTANT

CPUID should not be confused with the Cortex-M0+ CPUID register (Section 2.4.4.1.1) on each processor's internal Private Peripheral Bus, which lists the processor's part number and version.

2.3.1.2. GPIO Control

The processors have access to GPIO registers for fast and direct control of pins with GPIO functionality. There are two identical sets of registers:

- GPIO_x for direct control of IO bank 0 (user GPIOs 0 to 29, starting at the LSB)
- GPIO_HI_x for direct control of the QSPI IO bank (in the order SCLK, SSn, SD0, SD1, SD2, SD3, starting at the LSB)

NOTE

To drive a pin with the SIO's GPIO registers, the GPIO multiplexer for this pin must first be configured to select the SIO GPIO function. See Table 279.

These GPIO registers are *shared* between the two cores, and both cores can access them simultaneously. There are three registers for each bank:

- Output registers, GPIO_OUT and GPIO_HI_OUT, are used to set the output level of the GPIO (1/0 for high/low)
- Output enable registers, GPIO_OE and GPIO_HI_OE, are used to enable the output driver. 0 for high-impedance, 1 for drive high/low based on GPIO_OUT and GPIO_HI_OUT.
- Input registers, GPIO_IN and GPIO_HI_IN, allow the processor to sample the current state of the GPIOs

Reading GPIO_IN returns all 30 GPIO values (or 6 for GPIO_HI_IN) in a single read. Software can then mask out individual pins it is interested in.

SDK: https://github.com/raspberrypi/pico-sdk/blob/master/src/rp2_common/hardware_gpio/include/hardware/gpio.h Lines 859 - 869

```
859 static inline bool gpio_get(uint gpio) {
860 #ifdef NUM_BANK0_GPIOS <= 32
861     return sio_hw->gpio_in & (1u << gpio);
862 #else
863     if (gpio < 32) {
864         return sio_hw->gpio_in & (1u << gpio);
865     } else {
866         return sio_hw->gpio_hi_in & (1u << (gpio - 32));
867     }
868 #endif
869 }
```

The OUT and OE registers also have atomic SET, CLR, and XOR aliases, which allows software to update a subset of the pins in one operation. This is vital not only for safe parallel GPIO access between the two cores, but also safe concurrent GPIO access in an interrupt handler and foreground code running on one core.

SDK: https://github.com/raspberrypi/pico-sdk/blob/master/src/rp2_common/hardware_gpio/include/hardware/gpio.h Lines 908 - 914

```
908 static inline void gpio_set_mask(uint32_t mask) {
909 #ifdef PICO_USE_GPIO_COPROCESSOR
910     gpioc_lo_out_set(mask);
911 #else
912     sio_hw->gpio_set = mask;
913 #endif
914 }
```

SDK: https://github.com/raspberrypi/pico-sdk/blob/master/src/rp2_common/hardware_gpio/include/hardware/gpio.h Lines 955 - 961

```
955 static inline void gpio_clr_mask(uint32_t mask) {
956 #ifdef PICO_USE_GPIO_COPROCESSOR
957     gpioc_lo_out_clr(mask);
958 #else
959     sio_hw->gpio_clr = mask;
960 #endif
961 }
```

SDK: https://github.com/raspberrypi/pico-sdk/blob/master/src/rp2_common/hardware_gpio/include/hardware/gpio.h Lines 1145 - 1170

```
1145 static inline void gpio_put(uint gpio, bool value) {
1146 #ifdef PICO_USE_GPIO_COPROCESSOR
1147     gpioc_bit_out_put(gpio, value);
1148 #elif NUM_BANK0_GPIOS <= 32
1149     uint32_t mask = 1ul << gpio;
1150     if (value)
1151         gpio_set_mask(mask);
1152     else
1153         gpio_clr_mask(mask);
1154 #else
1155     uint32_t mask = 1ul << (gpio & 0x1fu);
1156     if (gpio < 32) {
1157         if (value) {
1158             sio_hw->gpio_set = mask;
1159         } else {
1160             sio_hw->gpio_clr = mask;
1161         }
1162     } else {
1163         if (value) {
1164             sio_hw->gpio_hi_set = mask;
1165         } else {
1166             sio_hw->gpio_hi_clr = mask;
1167         }
1168     }
1169 #endif
1170 }
```

If both processors write to an OUT or OE register (or any of its SET/CLR/XOR aliases) on the same clock cycle, the result is as though core 0 wrote first, and core 1 wrote immediately afterward. For example, if core 0 SETs a bit, and core 1 simultaneously XORs it, the bit will be set to 0, irrespective of it original value.

NOTE

This is a conceptual model for the result that is produced when two cores write to a GPIO register simultaneously. The register does not actually contain this intermediate value at any point. In the previous example, if the pin is initially 0, and core 0 performs a SET while core 1 performs a XOR, the GPIO output remains low without any positive glitch.

2.3.1.3. Hardware Spinlocks

The SIO provides 32 hardware spinlocks, which can be used to manage mutually-exclusive access to shared software resources. Each spinlock is a one-bit flag, mapped to a different address (from SPINLOCK0 to SPINLOCK31). Software interacts with each spinlock with one of the following operations:

- Read: attempt to claim the lock. Read value is nonzero if the lock was successfully claimed, or zero if the lock had already been claimed by a previous read.
- Write (any value): release the lock. The next attempt to claim the lock will be successful.

If both cores try to claim the same lock on the same clock cycle, core 0 succeeds.

Generally software will acquire a lock by repeatedly polling the lock bit ("spinning" on the lock) until it is successfully claimed. This is inefficient if the lock is held for long periods, so generally the spinlocks should be used to protect the short critical sections of higher-level primitives such as mutexes, semaphores and queues.

For debugging purposes, the current state of all 32 spinlocks can be observed via SPINLOCK_ST.

2.3.1.4. Inter-processor FIFOs (Mailboxes)

The SIO contains two FIFOs for passing data, messages or ordered events between the two cores. Each FIFO is 32 bits wide, and eight entries deep. One of the FIFOs can only be written by core 0, and read by core 1. The other can only be written by core 1, and read by core 0.

Each core writes to its outgoing FIFO by writing to FIFO_WR, and reads from its incoming FIFO by reading from FIFO_RD. A status register, FIFO_ST, provides the following status signals:

- Incoming FIFO contains data (VLD)
- Outgoing FIFO has room for more data (RDY)
- The incoming FIFO was read from while empty at some point in the past (ROE)
- The outgoing FIFO was written to while full at some point in the past (WOF)

Writing to the outgoing FIFO while full, or reading from the incoming FIFO while empty, does not affect the FIFO state. The current contents and level of the FIFO is preserved. However, this does represent some loss of data or reception of invalid data by the software accessing the FIFO, so a sticky error flag is raised (ROE or WOF).

The SIO has a FIFO IRQ output for each core, mapped to system IRQ numbers 15 and 16. Each IRQ output is the logical OR of the VLD, ROE and WOF bits in that core's FIFO_ST register: that is, the IRQ is asserted if any of these three bits is high, and clears again when they are all low. The ROE and WOF flags are cleared by writing any value to FIFO_ST, and the VLD flag is cleared by reading data from the FIFO until empty.

If the corresponding interrupt line is enabled in the Cortex-M0+ NVIC, then the processor will take an interrupt each time data appears in its FIFO, or if it has performed some invalid FIFO operation (read on empty, write on full). Typically Core 0 will use IRQ15 and core 1 will use IRQ16. If the IRQs are used the other way round then it is difficult for the core that has been interrupted to correctly identify the reason for the interrupt as the core doesn't have access to the other core's FIFO status register.

NOTE

ROE and WOF only become set if software misbehaves in some way. Generally, the interrupt handler will trigger when data appears in the FIFO (raising the VLD flag), and the interrupt handler clears the IRQ by reading data from the FIFO until VLD goes low once more.

The inter-processor FIFOs and the Cortex-M0+ Event signals are used by the bootrom (Section 2.8) wait_for_vector routine, where core 1 remains in a sleep state until it is woken, and provided with its initial stack pointer, entry point and vector table through the FIFO.

2.3.1.5. Integer Divider

The SIO provides one 8-cycle signed/unsigned divide/modulo module to each of the cores. Calculation is started by writing a dividend and divisor to the two argument registers, DIVIDEND and DIVISOR. The divider calculates the quotient / and remainder % of this division over the next 8 cycles, and on the 9th cycle the results can be read from the two result registers DIV_QUOTIENT and DIV_REMAINDER. A 'ready' bit in register DIV_CSR can be polled to wait for the calculation to complete, or software can insert a fixed 8-cycle delay.

SDK: https://github.com/raspberrypi/pico-sdk/blob/master/src/rp2_common/hardware_divider/divider.S Lines 12 - 16

```
12 regular_func_with_section hw_divider_divmod_s32
13     ldr r3, =(SIO_BASE)
14     str r0, [r3, #SIO_DIV_SDIVIDEND_OFFSET]
15     str r1, [r3, #SIO_DIV_SDIVISOR_OFFSET]
16     b hw_divider_divmod_return
```

NOTE

Software is free to perform other non-divider operations during these 8 cycles.

There are two aliases of the operand registers: writing to the signed alias (DIV_SDIVIDEND and DIV_SDIVISOR) will initiate a signed calculation, and the other (DIV_UDIVIDEND and DIV_UDIVISOR) will initiate an unsigned calculation.

SDK: https://github.com/raspberrypi/pico-sdk/blob/master/src/rp2_common/hardware_divider/divider.S Lines 20 - 24

```
20 regular_func_with_section hw_divider_divmod_u32
21     ldr r3, =(SIO_BASE)
22     str r0, [r3, #SIO_DIV_UDIVIDEND_OFFSET]
23     str r1, [r3, #SIO_DIV_UDIVISOR_OFFSET]
24     b hw_divider_divmod_return
```

NOTE

A new calculation begins immediately with *every* write to an operand register, and a new operand write immediately squashes any calculation currently in progress. For example, when dividing many numbers by the same divisor, only `xDIVISOR` needs to be written, and the signedness of each calculation is determined by whether `SDIVIDEND` or `UDIVIDEND` is written.

To support save and restore on interrupt handler entry/exit (or on e.g. an RTOS context switch), the result registers are also writable. Writing to a result register will cancel any operation in progress at the time. The DIV_CSR.DIRTY flag can help make save/restore more efficient: this flag is set when *any* divider register (operand or result) is written to, and cleared when the quotient is read.

NOTE

When enabled, the default divider AEABI support maps C level `/` and `%` to the hardware divider. When building software using the SDK and using the divider directly, it is important to read the quotient register *last*. This ensures the partial divider state will be correctly saved and restored by any interrupt code that uses the divider. You should read the quotient register whether you need the value or not.

The SDK module pico_divider https://github.com/raspberrypi/pico-sdk/blob/master/src/common/pico_divider_headers/include/pico/divider.h provides both the *AEABI* implementation needed to hook the C `/` and `%` operators for both 32-bit and 64-bit integer division, as well as some additional C functions that return quotients and remainders at the same time. All of these functions correctly save and restore the hardware divider state (when dirty) so that they can be used in either user or IRQ handler code.

The SDK module hardware_divider https://github.com/raspberrypi/pico-sdk/blob/master/src/rp2_common/hardware_divider/include/hardware/divider.h provides lower level macros and helper functions for accessing the hardware_divider, but these do not save and restore the hardware divider state (although this header does provide separate functions to do so).

2.3.1.6. Interpolator

Each core is equipped with two *interpolators* (`INTERP0` and `INTERP1`) which can accelerate tasks by combining certain pre-configured operations into a single processor cycle. Intended for cases where the pre-configured operation is repeated many times, this results in code which uses both fewer CPU cycles and fewer CPU registers in the time-critical sections of the code.

The interpolators are used to accelerate audio operations within the SDK, but their flexible configuration makes it possible to optimise many other tasks such as quantization and dithering, table lookup address generation, affine texture mapping, decompression and linear feedback.

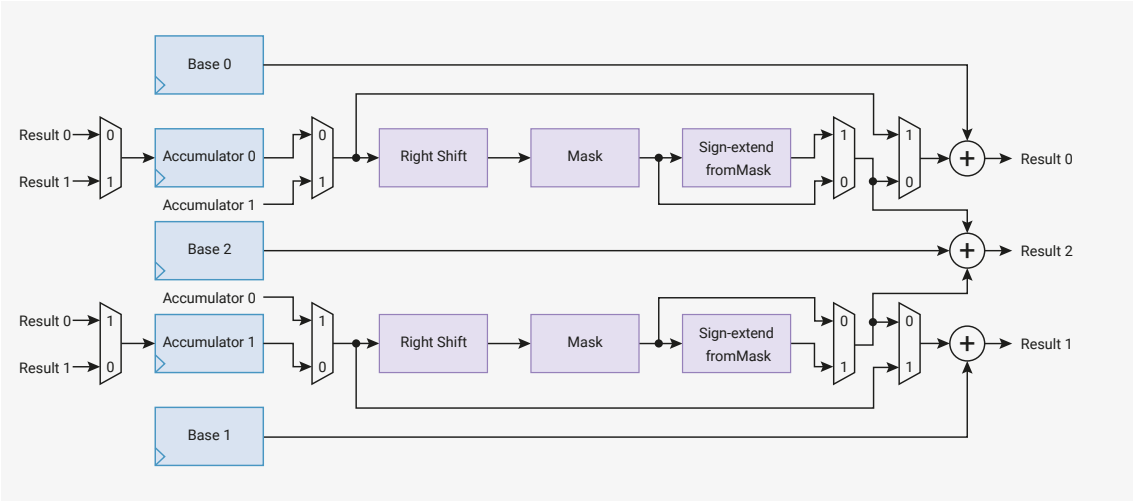

Figure 8. An interpolator. The two accumulator registers and three base registers have single-cycle read/write access from the processor. The interpolator is organised into two lanes, which perform masking, shifting and sign-extension operations on the two accumulators. This produces three possible results, by adding the intermediate shift/mask values to the three base registers. From left to right, the multiplexers on each lane are controlled by the following flags in the CTRL registers: CROSS_RESULT, CROSS_INPUT, SIGNED, ADD_RAW.

The processor can write or read any interpolator register in one cycle, and the results are ready on the next cycle. The processor can also perform an addition on one of the two accumulators ACCUM0 or ACCUM1 by writing to the corresponding ACCUMx_ADD register.

The three results are available in the read-only locations PEEK0, PEEK1, PEEK2. Reading from these locations does not change the state of the interpolator. The results are also aliased at the locations POP0, POP1, POP2; reading from a POPx alias returns the same result as the corresponding PEEKx, and simultaneously writes back the lane results to the accumulators. This can be used to advance the state of interpolator each time a result is read.

Additionally the interpolator supports simple fractional blending between two values as well as clamping values such that they lie within a given range.

The following example shows a trivial example of *popping* a lane result to produce simple iterative feedback.

Pico Examples: https://github.com/raspberrypi/pico-examples/blob/master/interp/hello_interp/hello_interp.c Lines 11 - 23

```
11 void times_table() {
12     puts("9 times table:");
13
14     // Initialise lane 0 on interp0 on this core
15     interp_config cfg = interp_default_config();
16     interp_set_config(interp0, 0, &cfg);
17
18     interp0->accum[0] = 0;
19     interp0->base[0] = 9;
20
21     for (int i = 0; i < 10; ++i)
22         printf("%d\n", interp0->pop[0]);
23 }
```

NOTE

By sheer coincidence, the interpolators are extremely well suited to SNES MODE7-style graphics routines. For example, on each core, INTERP0 can provide a stream of tile lookups for some affine transform, and INTERP1 can provide offsets into the tiles for the same transform.

2.3.1.6.1. Lane Operations

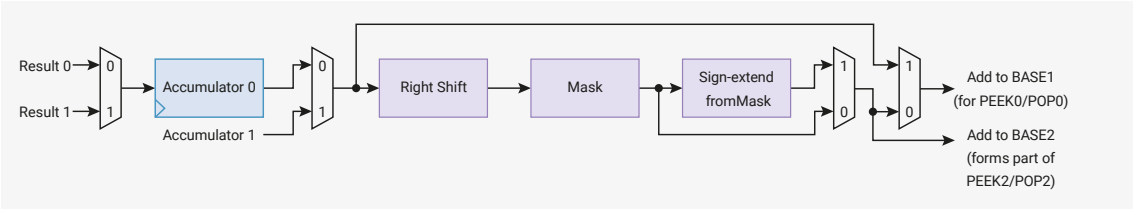

Figure 9. Each lane of each interpolator can be configured to perform mask, shift and sign-extension on one of the accumulators. This is fed into adders which produces final results, which may optionally be fed back into the accumulators with each read. The datapath can be configured using a handful of 32-bit multiplexers. From left to right, these are controlled by the following CTRL flags: CROSS_RESULT, CROSS_INPUT, SIGNED, ADD_RAW.

Each lane performs these three operations, in sequence:

- A right shift by `CTRL_LANEx_SHIFT` (0 to 31 bits)
- A mask of bits from `CTRL_LANEx_MASK_LSB` to `CTRL_LANEx_MASK_MSB` inclusive (each ranging from bit 0 to bit 31)
- A sign extension from the top of the mask, i.e. take bit `CTRL_LANEx_MASK_MSB` and OR it into all more-significant bits, if `CTRL_LANEx_SIGNED` is set

For example, if:

- `ACCUM0` = `0xdeadbeef`
- `CTRL_LANE0_SHIFT` = 8
- `CTRL_LANE0_MASK_LSB` = 4
- `CTRL_LANE0_MASK_MSB` = 7
- `CTRL_SIGNED` = 1

Then lane 0 would produce the following results at each stage:

- Right shift by 8 to produce `0x00deadbe`
- Mask bits 7 to 4 to produce `0x00deadbe & 0x000000f0` = `0x000000b0`
- Sign-extend up from bit 7 to produce `0xffffffb0`

In software:

Pico Examples: https://github.com/raspberrypi/pico-examples/blob/master/interp/hello_interp/hello_interp.c Lines 25 - 46

```
25 void moving_mask() {
26     interp_config cfg = interp_default_config();
27     interp0->accum[0] = 0x1234abcd;
28
29     puts("Masking:");
30     printf("ACCUM0 = %08x\n", interp0->accum[0]);
31     for (int i = 0; i < 8; ++i) {
32         // LSB, then MSB. These are inclusive, so 0,31 means "the entire 32 bit register"
33         interp_config_set_mask(&cfg, i * 4, i * 4 + 3);
34         interp_set_config(interp0, 0, &cfg);
35         // Reading from ACCUMx_ADD returns the raw lane shift and mask value, without BASEx
   added
36         printf("Nibble %d: %08x\n", i, interp0->add_raw[0]);
37     }
38
39     puts("Masking with sign extension:");
40     interp_config_set_signed(&cfg, true);
41     for (int i = 0; i < 8; ++i) {
42         interp_config_set_mask(&cfg, i * 4, i * 4 + 3);
43         interp_set_config(interp0, 0, &cfg);
44         printf("Nibble %d: %08x\n", i, interp0->add_raw[0]);
45     }
46 }
```

The above example should print:

```
ACCUM0 = 1234abcd
Nibble 0: 0000000d
Nibble 1: 000000c0
Nibble 2: 00000b00
Nibble 3: 0000a000
Nibble 4: 00040000
Nibble 5: 00300000
Nibble 6: 02000000
Nibble 7: 10000000
Masking with sign extension:
Nibble 0: fffffffd
Nibble 1: ffffffc0
Nibble 2: fffffb00
Nibble 3: ffffa000
Nibble 4: 00040000
Nibble 5: 00300000
Nibble 6: 02000000
Nibble 7: 10000000
```

Changing the result and input multiplexers can create feedback between the accumulators. This is useful e.g. for audio dithering.

Pico Examples: https://github.com/raspberrypi/pico-examples/blob/master/interp/hello_interp/hello_interp.c Lines 48 - 66

```
48 void cross_lanes() {
49     interp_config cfg = interp_default_config();
50     interp_config_set_cross_result(&cfg, true);
51     // ACCUM0 gets lane 1 result:
52     interp_set_config(interp0, 0, &cfg);
53     // ACCUM1 gets lane 0 result:
54     interp_set_config(interp0, 1, &cfg);
55
56     interp0->accum[0] = 123;
57     interp0->accum[1] = 456;
58     interp0->base[0] = 1;
59     interp0->base[1] = 0;
60     puts("Lane result crossover:");
61     for (int i = 0; i < 10; ++i) {
62         uint32_t peek0 = interp0->peek[0];
63         uint32_t pop1 = interp0->pop[1];
64         printf("PEEK0, POP1: %d, %d\n", peek0, pop1);
65     }
66 }
```

This should print:

```
PEEK0, POP1: 124, 456
PEEK0, POP1: 457, 124
PEEK0, POP1: 125, 457
PEEK0, POP1: 458, 125
PEEK0, POP1: 126, 458
PEEK0, POP1: 459, 126
PEEK0, POP1: 127, 459
PEEK0, POP1: 460, 127
PEEK0, POP1: 128, 460
PEEK0, POP1: 461, 128
```

2.3.1.6.2. Blend Mode

Blend mode is available on INTERP0 on each core, and is enabled by the CTRL_LANE0_BLEND control flag. It performs linear interpolation, which we define as follows:

$$x = x_0 + \alpha(x_1 - x_0), \text{ for } 0 \leq \alpha < 1$$

Where x_0 is the register BASE0, x_1 is the register BASE1, and α is a fractional value formed from the least significant 8 bits of the lane 1 shift and mask value.

Blend mode has the following differences from normal mode:

- PEEK0, POP0 return the 8-bit alpha value (the 8 LSBs of the lane 1 shift and mask value), with zeroes in result bits 31 down to 24.
- PEEK1, POP1 return the linear interpolation between BASE0 and BASE1
- PEEK2, POP2 do not include lane 1 result in the addition (i.e. it is BASE2 + lane 0 shift and mask value)

The result of the linear interpolation is equal to BASE0 when the alpha value is 0, and equal to BASE0 + 255/256 * (BASE1 - BASE0) when the alpha value is all-ones.

Pico Examples: https://github.com/raspberrypi/pico-examples/blob/master/interp/hello_interp/hello_interp.c Lines 68 - 87

```
68 void simple_blend1() {
69     puts("Simple blend 1:");
70
71     interp_config cfg = interp_default_config();
72     interp_config_set_blend(&cfg, true);
73     interp_set_config(interp0, 0, &cfg);
74
75     cfg = interp_default_config();
76     interp_set_config(interp0, 1, &cfg);
77
78     interp0->base[0] = 500;
79     interp0->base[1] = 1000;
80
81     for (int i = 0; i <= 6; i++) {
82         // set fraction to value between 0 and 255
83         interp0->accum[1] = 255 * i / 6;
84         // ≈ 500 + (1000 - 500) * i / 6;
85         printf("%d\n", (int) interp0->peek[1]);
86     }
87 }
```

This should print (note the 255/256 resulting in 998 not 1000):

```
500
582
666
748
832
914
998
```

CTRL_LANE1_SIGNED controls whether BASE0 and BASE1 are sign-extended for this interpolation (this sign extension is required because the interpolation produces an intermediate product value 40 bits in size). CTRL_LANE0_SIGNED continues to control the sign extension of the lane 0 intermediate result in PEEK2, POP2 as normal.

Pico Examples: https://github.com/raspberrypi/pico-examples/blob/master/interp/hello_interp/hello_interp.c Lines 90 - 121

```
 90 void print_simple_blend2_results(bool is_signed) {
 91     // lane 1 signed flag controls whether base 0/1 are treated as signed or unsigned
 92     interp_config cfg = interp_default_config();
 93     interp_config_set_signed(&cfg, is_signed);
 94     interp_set_config(interp0, 1, &cfg);
 95
 96     for (int i = 0; i <= 6; i++) {
 97         interp0->accum[1] = 255 * i / 6;
 98         if (is_signed) {
 99             printf("%d\n", (int) interp0->peek[1]);
100         } else {
101             printf("0x%08x\n", (uint) interp0->peek[1]);
102         }
103     }
104 }
105
106 void simple_blend2() {
107     puts("Simple blend 2:");
108
109     interp_config cfg = interp_default_config();
110     interp_config_set_blend(&cfg, true);
111     interp_set_config(interp0, 0, &cfg);
112
113     interp0->base[0] = (uint32_t) -1000;
114     interp0->base[1] = 1000;
115
116     puts("signed:");
117     print_simple_blend2_results(true);
118
119     puts("unsigned:");
120     print_simple_blend2_results(false);
121 }
```

This should print:

```
signed:
-1000
-672
-336
-8
328
656
992
unsigned:
0xfffffc18
0xd5fffd60
0xaafffeb0
0x80fffff8
0x56000148
0x2c000290
0x010003e0
```

Finally, in blend mode when using the `BASE_1AND0` register to send a 16-bit value to each of `BASE0` and `BASE1` with a single 32-bit write, the sign-extension of these 16-bit values to full 32-bit values during the write is controlled by `CTRL_LANE1_SIGNED` for both bases, as opposed to non-blend-mode operation, where `CTRL_LANE0_SIGNED` affects extension into `BASE0` and `CTRL_LANE1_SIGNED` affects extension into `BASE1`.

Pico Examples: https://github.com/raspberrypi/pico-examples/blob/master/interp/hello_interp/hello_interp.c Lines 124 - 145

```
124 void simple_blend3() {
125     puts("Simple blend 3:");
126
127     interp_config cfg = interp_default_config();
128     interp_config_set_blend(&cfg, true);
129     interp_set_config(interp0, 0, &cfg);
130
131     cfg = interp_default_config();
132     interp_set_config(interp0, 1, &cfg);
133
134     interp0->accum[1] = 128;
135     interp0->base01 = 0x30005000;
136     printf("0x%08x\n", (int) interp0->peek[1]);
137     interp0->base01 = 0xe000f000;
138     printf("0x%08x\n", (int) interp0->peek[1]);
139
140     interp_config_set_signed(&cfg, true);
141     interp_set_config(interp0, 1, &cfg);
142
143     interp0->base01 = 0xe000f000;
144     printf("0x%08x\n", (int) interp0->peek[1]);
145 }
```

This should print:

```
0x00004000
0x0000e800
0xffffe800
```

2.3.1.6.3. Clamp Mode

Clamp mode is available on INTERP1 on each core, and is enabled by the CTRL_LANE0_CLAMP control flag. In clamp mode, the PEEK0/POP0 result is the lane value (shifted, masked, sign-extended ACCUM0) clamped between BASE0 and BASE1. In other words, if the lane value is greater than BASE1, a value of BASE1 is produced; if less than BASE0, a value of BASE0 is produced; otherwise, the value passes through. No addition is performed. The signedness of these comparisons is controlled by the CTRL_LANE0_SIGNED flag.

Other than this, the interpolator behaves the same as in normal mode.

Pico Examples: https://github.com/raspberrypi/pico-examples/blob/master/interp/hello_interp/hello_interp.c Lines 193 - 211

```
193 void clamp() {
194     puts("Clamp:");
195     interp_config cfg = interp_default_config();
196     interp_config_set_clamp(&cfg, true);
197     interp_config_set_shift(&cfg, 2);
198     // set mask according to new position of sign bit..
199     interp_config_set_mask(&cfg, 0, 29);
200     // ...so that the shifted value is correctly sign extended
201     interp_config_set_signed(&cfg, true);
202     interp_set_config(interp1, 0, &cfg);
203
204     interp1->base[0] = 0;
205     interp1->base[1] = 255;
206
207     for (int i = -1024; i <= 1024; i += 256) {
```

```
208         interp1->accum[0] = i;
209         printf("%d\t%d\n", i, (int) interp1->peek[0]);
210     }
211 }
```

This should print:

```
-1024   0
-768    0
-512    0
-256    0
0       0
256     64
512     128
768     192
1024    255
```

2.3.1.6.4. Sample Use Case: Linear Interpolation

Linear interpolation is a more complete example of using blend mode in conjunction with other interpolator functionality:

In this example, ACCUM0 is used to track a fixed point (integer/fraction) position within a list of values to be interpolated. Lane 0 is used to produce an address into the value array for the integer part of the position. The fractional part of the position is shifted to produce a value from 0-255 for the blend. The blend is performed between two consecutive values in the array.

Finally the fractional position is updated via a single write to ACCUM0_ADD_RAW.

Pico Examples: https://github.com/raspberrypi/pico-examples/blob/master/interp/hello_interp/hello_interp.c Lines 147 - 191

```
147 void linear_interpolation() {
148     puts("Linear interpolation:");
149     const int uv_fractional_bits = 12;
150
151     // for lane 0
152     // shift and mask XXXX XXXX XXXX XXXX XXXX FFFF FFFF FFFF (accum 0)
153     // to             0000 0000 000X XXXX XXXX XXXX XXXX XXX0
154     // i.e. non fractional part times 2 (for uint16_t)
155     interp_config cfg = interp_default_config();
156     interp_config_set_shift(&cfg, uv_fractional_bits - 1);
157     interp_config_set_mask(&cfg, 1, 32 - uv_fractional_bits);
158     interp_config_set_blend(&cfg, true);
159     interp_set_config(interp0, 0, &cfg);
160
161     // for lane 1
162     // shift XXXX XXXX XXXX XXXX XXXX FFFF FFFF FFFF (accum 0 via cross input)
163     // to    0000 XXXX XXXX XXXX XXXX FFFF FFFF FFFF
164
165     cfg = interp_default_config();
166     interp_config_set_shift(&cfg, uv_fractional_bits - 8);
167     interp_config_set_signed(&cfg, true);
168     interp_config_set_cross_input(&cfg, true); // signed blending
169     interp_set_config(interp0, 1, &cfg);
170
171     int16_t samples[] = {0, 10, -20, -1000, 500};
172
173     // step is 1/4 in our fractional representation
```

```
174     uint step = (1 << uv_fractional_bits) / 4;
175
176     interp0->accum[0] = 0; // initial sample_offset;
177     interp0->base[2] = (uintptr_t) samples;
178     for (int i = 0; i < 16; i++) {
179         // result2 = samples + (lane0 raw result)
180         // i.e. ptr to the first of two samples to blend between
181         int16_t *sample_pair = (int16_t *) interp0->peek[2];
182         interp0->base[0] = sample_pair[0];
183         interp0->base[1] = sample_pair[1];
184         uint32_t peek1 = interp0->peek[1];
185         uint32_t add_raw1 = interp0->add_raw[1];
186         printf("%d\t(%d%% between %d and %d)\n", (int) peek1,
187                100 * (add_raw1 & 0xff) / 0xff,
188                sample_pair[0], sample_pair[1]);
189         interp0->add_raw[0] = step;
190     }
191 }
```

This should print:

```
0       (0% between 0 and 10)
2       (25% between 0 and 10)
5       (50% between 0 and 10)
7       (75% between 0 and 10)
10      (0% between 10 and -20)
2       (25% between 10 and -20)
-5      (50% between 10 and -20)
-13     (75% between 10 and -20)
-20     (0% between -20 and -1000)
-265    (25% between -20 and -1000)
-510    (50% between -20 and -1000)
-755    (75% between -20 and -1000)
-1000   (0% between -1000 and 500)
-625    (25% between -1000 and 500)
-250    (50% between -1000 and 500)
125     (75% between -1000 and 500)
```

This method is used for fast approximate audio upscaling in the SDK

2.3.1.6.5. Sample Use Case: Simple Affine Texture Mapping

Simple affine texture mapping can be implemented by using fixed point arithmetic for texture coordinates, and stepping a fixed amount in each coordinate for every pixel in a scanline. The integer part of the texture coordinates are used to form an address within the texture to lookup a pixel colour.

By using two lanes, all three base values and the `CTRL_LANEx_ADD_RAW` flag, it is possible to reduce what would be quite an expensive CPU operation to a single cycle iteration using the interpolator.

Pico Examples: https://github.com/raspberrypi/pico-examples/blob/master/interp/hello_interp/hello_interp.c Lines 214 - 272

```
214 void texture_mapping_setup(uint8_t *texture, uint texture_width_bits, uint
    texture_height_bits,
215                          uint uv_fractional_bits) {
216     interp_config cfg = interp_default_config();
217     // set add_raw flag to use raw (un-shifted and un-masked) lane accumulator value when
    adding
218     // it to the lane base to make the lane result
```

```
219     interp_config_set_add_raw(&cfg, true);
220     interp_config_set_shift(&cfg, uv_fractional_bits);
221     interp_config_set_mask(&cfg, 0, texture_width_bits - 1);
222     interp_set_config(interp0, 0, &cfg);
223
224     interp_config_set_shift(&cfg, uv_fractional_bits - texture_width_bits);
225     interp_config_set_mask(&cfg, texture_width_bits, texture_width_bits +
    texture_height_bits - 1);
226     interp_set_config(interp0, 1, &cfg);
227
228     interp0->base[2] = (uintptr_t) texture;
229 }
230
231 void texture_mapped_span(uint8_t *output, uint32_t u, uint32_t v, uint32_t du, uint32_t dv,
    uint count) {
232     // u, v are texture coordinates in fixed point with uv_fractional_bits fractional bits
233     // du, dv are texture coordinate steps across the span in same fixed point.
234     interp0->accum[0] = u;
235     interp0->base[0] = du;
236     interp0->accum[1] = v;
237     interp0->base[1] = dv;
238     for (uint i = 0; i < count; i++) {
239         // equivalent to
240         // uint32_t sm_result0 = (accum0 >> uv_fractional_bits) & (1 << (texture_width_bits -
    1);
241         // uint32_t sm_result1 = (accum1 >> uv_fractional_bits) & (1 << (texture_height_bits -
    1);
242         // uint8_t *address = texture + sm_result0 + (sm_result1 << texture_width_bits);
243         // output[i] = *address;
244         // accum0 = du + accum0;
245         // accum1 = dv + accum1;
246
247         // result2 is the texture address for the current pixel;
248         // popping the result advances to the next iteration
249         output[i] = *(uint8_t *) interp0->pop[2];
250     }
251 }
252
253 void texture_mapping() {
254     puts("Affine Texture mapping (with texture wrap):");
255
256     uint8_t texture[] = {
257             0x00, 0x01, 0x02, 0x03,
258             0x10, 0x11, 0x12, 0x13,
259             0x20, 0x21, 0x22, 0x23,
260             0x30, 0x31, 0x32, 0x33,
261     };
262     // 4x4 texture
263     texture_mapping_setup(texture, 2, 2, 16);
264     uint8_t output[12];
265     uint32_t du = 65536 / 2;  // step of 1/2
266     uint32_t dv = 65536 / 3;  // step of 1/3
267     texture_mapped_span(output, 0, 0, du, dv, 12);
268
269     for (uint i = 0; i < 12; i++) {
270         printf("0x%02x\n", output[i]);
271     }
272 }
```

This should print:

```
0x00
0x00
0x01
0x01
0x12
0x12
0x13
0x23
0x20
0x20
0x31
0x31
```

2.3.1.7. List of Registers

The SIO registers start at a base address of `0xd0000000` (defined as SIO_BASE in SDK).

Table 16. List of SIO registers

Offset	Name	Info
0x000	CPUID	Processor core identifier
0x004	GPIO_IN	Input value for GPIO pins
0x008	GPIO_HI_IN	Input value for QSPI pins
0x010	GPIO_OUT	GPIO output value
0x014	GPIO_OUT_SET	GPIO output value set
0x018	GPIO_OUT_CLR	GPIO output value clear
0x01c	GPIO_OUT_XOR	GPIO output value XOR
0x020	GPIO_OE	GPIO output enable
0x024	GPIO_OE_SET	GPIO output enable set
0x028	GPIO_OE_CLR	GPIO output enable clear
0x02c	GPIO_OE_XOR	GPIO output enable XOR
0x030	GPIO_HI_OUT	QSPI output value
0x034	GPIO_HI_OUT_SET	QSPI output value set
0x038	GPIO_HI_OUT_CLR	QSPI output value clear
0x03c	GPIO_HI_OUT_XOR	QSPI output value XOR
0x040	GPIO_HI_OE	QSPI output enable
0x044	GPIO_HI_OE_SET	QSPI output enable set
0x048	GPIO_HI_OE_CLR	QSPI output enable clear
0x04c	GPIO_HI_OE_XOR	QSPI output enable XOR
0x050	FIFO_ST	Status register for inter-core FIFOs (mailboxes).
0x054	FIFO_WR	Write access to this core's TX FIFO
0x058	FIFO_RD	Read access to this core's RX FIFO
0x05c	SPINLOCK_ST	Spinlock state
0x060	DIV_UDIVIDEND	Divider unsigned dividend

Offset	Name	Info
0x064	DIV_UDIVISOR	Divider unsigned divisor
0x068	DIV_SDIVIDEND	Divider signed dividend
0x06c	DIV_SDIVISOR	Divider signed divisor
0x070	DIV_QUOTIENT	Divider result quotient
0x074	DIV_REMAINDER	Divider result remainder
0x078	DIV_CSR	Control and status register for divider.
0x080	INTERP0_ACCUM0	Read/write access to accumulator 0
0x084	INTERP0_ACCUM1	Read/write access to accumulator 1
0x088	INTERP0_BASE0	Read/write access to BASE0 register.
0x08c	INTERP0_BASE1	Read/write access to BASE1 register.
0x090	INTERP0_BASE2	Read/write access to BASE2 register.
0x094	INTERP0_POP_LANE0	Read LANE0 result, and simultaneously write lane results to both accumulators (POP).
0x098	INTERP0_POP_LANE1	Read LANE1 result, and simultaneously write lane results to both accumulators (POP).
0x09c	INTERP0_POP_FULL	Read FULL result, and simultaneously write lane results to both accumulators (POP).
0x0a0	INTERP0_PEEK_LANE0	Read LANE0 result, without altering any internal state (PEEK).
0x0a4	INTERP0_PEEK_LANE1	Read LANE1 result, without altering any internal state (PEEK).
0x0a8	INTERP0_PEEK_FULL	Read FULL result, without altering any internal state (PEEK).
0x0ac	INTERP0_CTRL_LANE0	Control register for lane 0
0x0b0	INTERP0_CTRL_LANE1	Control register for lane 1
0x0b4	INTERP0_ACCUM0_ADD	Values written here are atomically added to ACCUM0
0x0b8	INTERP0_ACCUM1_ADD	Values written here are atomically added to ACCUM1
0x0bc	INTERP0_BASE_1AND0	On write, the lower 16 bits go to BASE0, upper bits to BASE1 simultaneously.
0x0c0	INTERP1_ACCUM0	Read/write access to accumulator 0
0x0c4	INTERP1_ACCUM1	Read/write access to accumulator 1
0x0c8	INTERP1_BASE0	Read/write access to BASE0 register.
0x0cc	INTERP1_BASE1	Read/write access to BASE1 register.
0x0d0	INTERP1_BASE2	Read/write access to BASE2 register.
0x0d4	INTERP1_POP_LANE0	Read LANE0 result, and simultaneously write lane results to both accumulators (POP).
0x0d8	INTERP1_POP_LANE1	Read LANE1 result, and simultaneously write lane results to both accumulators (POP).
0x0dc	INTERP1_POP_FULL	Read FULL result, and simultaneously write lane results to both accumulators (POP).
0x0e0	INTERP1_PEEK_LANE0	Read LANE0 result, without altering any internal state (PEEK).

Offset	Name	Info
0x0e4	INTERP1_PEEK_LANE1	Read LANE1 result, without altering any internal state (PEEK).
0x0e8	INTERP1_PEEK_FULL	Read FULL result, without altering any internal state (PEEK).
0x0ec	INTERP1_CTRL_LANE0	Control register for lane 0
0x0f0	INTERP1_CTRL_LANE1	Control register for lane 1
0x0f4	INTERP1_ACCUM0_ADD	Values written here are atomically added to ACCUM0
0x0f8	INTERP1_ACCUM1_ADD	Values written here are atomically added to ACCUM1
0x0fc	INTERP1_BASE_1AND0	On write, the lower 16 bits go to BASE0, upper bits to BASE1 simultaneously.
0x100	SPINLOCK0	Spinlock register 0
0x104	SPINLOCK1	Spinlock register 1
0x108	SPINLOCK2	Spinlock register 2
0x10c	SPINLOCK3	Spinlock register 3
0x110	SPINLOCK4	Spinlock register 4
0x114	SPINLOCK5	Spinlock register 5
0x118	SPINLOCK6	Spinlock register 6
0x11c	SPINLOCK7	Spinlock register 7
0x120	SPINLOCK8	Spinlock register 8
0x124	SPINLOCK9	Spinlock register 9
0x128	SPINLOCK10	Spinlock register 10
0x12c	SPINLOCK11	Spinlock register 11
0x130	SPINLOCK12	Spinlock register 12
0x134	SPINLOCK13	Spinlock register 13
0x138	SPINLOCK14	Spinlock register 14
0x13c	SPINLOCK15	Spinlock register 15
0x140	SPINLOCK16	Spinlock register 16
0x144	SPINLOCK17	Spinlock register 17
0x148	SPINLOCK18	Spinlock register 18
0x14c	SPINLOCK19	Spinlock register 19
0x150	SPINLOCK20	Spinlock register 20
0x154	SPINLOCK21	Spinlock register 21
0x158	SPINLOCK22	Spinlock register 22
0x15c	SPINLOCK23	Spinlock register 23
0x160	SPINLOCK24	Spinlock register 24
0x164	SPINLOCK25	Spinlock register 25
0x168	SPINLOCK26	Spinlock register 26
0x16c	SPINLOCK27	Spinlock register 27

Offset	Name	Info
0x170	SPINLOCK28	Spinlock register 28
0x174	SPINLOCK29	Spinlock register 29
0x178	SPINLOCK30	Spinlock register 30
0x17c	SPINLOCK31	Spinlock register 31

SIO: CPUID Register

Offset: 0x000

Description

Processor core identifier

Table 17. CPUID Register

Bits	Description	Type	Reset
31:0	Value is 0 when read from processor core 0, and 1 when read from processor core 1.	RO	-

SIO: GPIO_IN Register

Offset: 0x004

Description

Input value for GPIO pins

Table 18. GPIO_IN Register

Bits	Description	Type	Reset
31:30	Reserved.	-	-
29:0	Input value for GPIO0...29	RO	0x00000000

SIO: GPIO_HI_IN Register

Offset: 0x008

Description

Input value for QSPI pins

Table 19. GPIO_HI_IN Register

Bits	Description	Type	Reset
31:6	Reserved.	-	-
5:0	Input value on QSPI IO in order 0..5: SCLK, SSn, SD0, SD1, SD2, SD3	RO	0x00

SIO: GPIO_OUT Register

Offset: 0x010

Description

GPIO output value

Table 20. GPIO_OUT Register

Bits	Description	Type	Reset
31:30	Reserved.	-	-

Bits	Description	Type	Reset
29:0	Set output level (1/0 → high/low) for GPIO0…29. Reading back gives the last value written, NOT the input value from the pins. If core 0 and core 1 both write to GPIO_OUT simultaneously (or to a SET/CLR/XOR alias), the result is as though the write from core 0 took place first, and the write from core 1 was then applied to that intermediate result.	RW	0x00000000

SIO: GPIO_OUT_SET Register

Offset: 0x014

Description

GPIO output value set

Table 21. GPIO_OUT_SET Register

Bits	Description	Type	Reset
31:30	Reserved.	-	-
29:0	Perform an atomic bit-set on GPIO_OUT, i.e. `GPIO_OUT |= wdata`	WO	0x00000000

SIO: GPIO_OUT_CLR Register

Offset: 0x018

Description

GPIO output value clear

Table 22. GPIO_OUT_CLR Register

Bits	Description	Type	Reset
31:30	Reserved.	-	-
29:0	Perform an atomic bit-clear on GPIO_OUT, i.e. `GPIO_OUT &= ~wdata`	WO	0x00000000

SIO: GPIO_OUT_XOR Register

Offset: 0x01c

Description

GPIO output value XOR

Table 23. GPIO_OUT_XOR Register

Bits	Description	Type	Reset
31:30	Reserved.	-	-
29:0	Perform an atomic bitwise XOR on GPIO_OUT, i.e. `GPIO_OUT ^= wdata`	WO	0x00000000

SIO: GPIO_OE Register

Offset: 0x020

Description

GPIO output enable

Table 24. GPIO_OE Register

Bits	Description	Type	Reset
31:30	Reserved.	-	-

Bits	Description	Type	Reset
29:0	Set output enable (1/0 → output/input) for GPIO0…29. Reading back gives the last value written. If core 0 and core 1 both write to GPIO_OE simultaneously (or to a SET/CLR/XOR alias), the result is as though the write from core 0 took place first, and the write from core 1 was then applied to that intermediate result.	RW	0x00000000

SIO: GPIO_OE_SET Register

Offset: 0x024

Description

GPIO output enable set

Table 25. GPIO_OE_SET Register

Bits	Description	Type	Reset
31:30	Reserved.	-	-
29:0	Perform an atomic bit-set on GPIO_OE, i.e. `GPIO_OE |= wdata`	WO	0x00000000

SIO: GPIO_OE_CLR Register

Offset: 0x028

Description

GPIO output enable clear

Table 26. GPIO_OE_CLR Register

Bits	Description	Type	Reset
31:30	Reserved.	-	-
29:0	Perform an atomic bit-clear on GPIO_OE, i.e. `GPIO_OE &= ~wdata`	WO	0x00000000

SIO: GPIO_OE_XOR Register

Offset: 0x02c

Description

GPIO output enable XOR

Table 27. GPIO_OE_XOR Register

Bits	Description	Type	Reset
31:30	Reserved.	-	-
29:0	Perform an atomic bitwise XOR on GPIO_OE, i.e. `GPIO_OE ^= wdata`	WO	0x00000000

SIO: GPIO_HI_OUT Register

Offset: 0x030

Description

QSPI output value

Table 28. GPIO_HI_OUT Register

Bits	Description	Type	Reset
31:6	Reserved.	-	-

Bits	Description	Type	Reset
5:0	Set output level (1/0 → high/low) for QSPI IO0…5. Reading back gives the last value written, NOT the input value from the pins. If core 0 and core 1 both write to GPIO_HI_OUT simultaneously (or to a SET/CLR/XOR alias), the result is as though the write from core 0 took place first, and the write from core 1 was then applied to that intermediate result.	RW	0x00

SIO: GPIO_HI_OUT_SET Register

Offset: 0x034

Description

QSPI output value set

Table 29. GPIO_HI_OUT_SET Register

Bits	Description	Type	Reset
31:6	Reserved.	-	-
5:0	Perform an atomic bit-set on GPIO_HI_OUT, i.e. `GPIO_HI_OUT |= wdata`	WO	0x00

SIO: GPIO_HI_OUT_CLR Register

Offset: 0x038

Description

QSPI output value clear

Table 30. GPIO_HI_OUT_CLR Register

Bits	Description	Type	Reset
31:6	Reserved.	-	-
5:0	Perform an atomic bit-clear on GPIO_HI_OUT, i.e. `GPIO_HI_OUT &= ~wdata`	WO	0x00

SIO: GPIO_HI_OUT_XOR Register

Offset: 0x03c

Description

QSPI output value XOR

Table 31. GPIO_HI_OUT_XOR Register

Bits	Description	Type	Reset
31:6	Reserved.	-	-
5:0	Perform an atomic bitwise XOR on GPIO_HI_OUT, i.e. `GPIO_HI_OUT ^= wdata`	WO	0x00

SIO: GPIO_HI_OE Register

Offset: 0x040

Description

QSPI output enable

Table 32. GPIO_HI_OE Register

Bits	Description	Type	Reset
31:6	Reserved.	-	-

Bits	Description	Type	Reset
5:0	Set output enable (1/0 → output/input) for QSPI IO0…5. Reading back gives the last value written. If core 0 and core 1 both write to GPIO_HI_OE simultaneously (or to a SET/CLR/XOR alias), the result is as though the write from core 0 took place first, and the write from core 1 was then applied to that intermediate result.	RW	0x00

SIO: GPIO_HI_OE_SET Register

Offset: 0x044

Description

QSPI output enable set

Table 33. GPIO_HI_OE_SET Register

Bits	Description	Type	Reset
31:6	Reserved.	-	-
5:0	Perform an atomic bit-set on GPIO_HI_OE, i.e. `GPIO_HI_OE |= wdata`	WO	0x00

SIO: GPIO_HI_OE_CLR Register

Offset: 0x048

Description

QSPI output enable clear

Table 34. GPIO_HI_OE_CLR Register

Bits	Description	Type	Reset
31:6	Reserved.	-	-
5:0	Perform an atomic bit-clear on GPIO_HI_OE, i.e. `GPIO_HI_OE &= ~wdata`	WO	0x00

SIO: GPIO_HI_OE_XOR Register

Offset: 0x04c

Description

QSPI output enable XOR

Table 35. GPIO_HI_OE_XOR Register

Bits	Description	Type	Reset
31:6	Reserved.	-	-
5:0	Perform an atomic bitwise XOR on GPIO_HI_OE, i.e. `GPIO_HI_OE ^= wdata`	WO	0x00

SIO: FIFO_ST Register

Offset: 0x050

Description

Status register for inter-core FIFOs (mailboxes).
There is one FIFO in the core 0 → core 1 direction, and one core 1 → core 0. Both are 32 bits wide and 8 words deep.
Core 0 can see the read side of the 1→0 FIFO (RX), and the write side of 0→1 FIFO (TX).
Core 1 can see the read side of the 0→1 FIFO (RX), and the write side of 1→0 FIFO (TX).
The SIO IRQ for each core is the logical OR of the VLD, WOF and ROE fields of its FIFO_ST register.

Table 36. FIFO_ST Register

Bits	Description	Type	Reset
31:4	Reserved.	-	-
3	**ROE**: Sticky flag indicating the RX FIFO was read when empty. This read was ignored by the FIFO.	WC	0x0
2	**WOF**: Sticky flag indicating the TX FIFO was written when full. This write was ignored by the FIFO.	WC	0x0
1	**RDY**: Value is 1 if this core's TX FIFO is not full (i.e. if FIFO_WR is ready for more data)	RO	0x1
0	**VLD**: Value is 1 if this core's RX FIFO is not empty (i.e. if FIFO_RD is valid)	RO	0x0

SIO: FIFO_WR Register

Offset: 0x054

Table 37. FIFO_WR Register

Bits	Description	Type	Reset
31:0	Write access to this core's TX FIFO	WF	0x00000000

SIO: FIFO_RD Register

Offset: 0x058

Table 38. FIFO_RD Register

Bits	Description	Type	Reset
31:0	Read access to this core's RX FIFO	RF	-

SIO: SPINLOCK_ST Register

Offset: 0x05c

Table 39. SPINLOCK_ST Register

Bits	Description	Type	Reset
31:0	Spinlock state A bitmap containing the state of all 32 spinlocks (1=locked). Mainly intended for debugging.	RO	0x00000000

SIO: DIV_UDIVIDEND Register

Offset: 0x060

Table 40. DIV_UDIVIDEND Register

Bits	Description	Type	Reset
31:0	Divider unsigned dividend Write to the DIVIDEND operand of the divider, i.e. the p in `p / q`. Any operand write starts a new calculation. The results appear in QUOTIENT, REMAINDER. UDIVIDEND/SDIVIDEND are aliases of the same internal register. The U alias starts an unsigned calculation, and the S alias starts a signed calculation.	RW	0x00000000

SIO: DIV_UDIVISOR Register

Offset: 0x064

Table 41. DIV_UDIVISOR Register

Bits	Description	Type	Reset
31:0	Divider unsigned divisor Write to the DIVISOR operand of the divider, i.e. the q in `p / q`. Any operand write starts a new calculation. The results appear in QUOTIENT, REMAINDER. UDIVISOR/SDIVISOR are aliases of the same internal register. The U alias starts an unsigned calculation, and the S alias starts a signed calculation.	RW	0x00000000

SIO: DIV_SDIVIDEND Register

Offset: 0x068

Table 42. DIV_SDIVIDEND Register

Bits	Description	Type	Reset
31:0	Divider signed dividend The same as UDIVIDEND, but starts a signed calculation, rather than unsigned.	RW	0x00000000

SIO: DIV_SDIVISOR Register

Offset: 0x06c

Table 43. DIV_SDIVISOR Register

Bits	Description	Type	Reset
31:0	Divider signed divisor The same as UDIVISOR, but starts a signed calculation, rather than unsigned.	RW	0x00000000

SIO: DIV_QUOTIENT Register

Offset: 0x070

Table 44. DIV_QUOTIENT Register

Bits	Description	Type	Reset
31:0	Divider result quotient The result of `DIVIDEND / DIVISOR` (division). Contents undefined while CSR_READY is low. For signed calculations, QUOTIENT is negative when the signs of DIVIDEND and DIVISOR differ. This register can be written to directly, for context save/restore purposes. This halts any in-progress calculation and sets the CSR_READY and CSR_DIRTY flags. Reading from QUOTIENT clears the CSR_DIRTY flag, so should read results in the order REMAINDER, QUOTIENT if CSR_DIRTY is used.	RW	0x00000000

SIO: DIV_REMAINDER Register

Offset: 0x074

Table 45. DIV_REMAINDER Register

Bits	Description	Type	Reset
31:0	Divider result remainder The result of `DIVIDEND % DIVISOR` (modulo). Contents undefined while CSR_READY is low. For signed calculations, REMAINDER is negative only when DIVIDEND is negative. This register can be written to directly, for context save/restore purposes. This halts any in-progress calculation and sets the CSR_READY and CSR_DIRTY flags.	RW	0x00000000

SIO: DIV_CSR Register

Offset: 0x078

Description

Control and status register for divider.

Table 46. DIV_CSR Register

Bits	Description	Type	Reset
31:2	Reserved.	-	-
1	**DIRTY**: Changes to 1 when any register is written, and back to 0 when QUOTIENT is read. Software can use this flag to make save/restore more efficient (skip if not DIRTY). If the flag is used in this way, it's recommended to either read QUOTIENT only, or REMAINDER and then QUOTIENT, to prevent data loss on context switch.	RO	0x0
0	**READY**: Reads as 0 when a calculation is in progress, 1 otherwise. Writing an operand (xDIVIDEND, xDIVISOR) will immediately start a new calculation, no matter if one is already in progress. Writing to a result register will immediately terminate any in-progress calculation and set the READY and DIRTY flags.	RO	0x1

SIO: INTERP0_ACCUM0 Register

Offset: 0x080

Table 47. INTERP0_ACCUM0 Register

Bits	Description	Type	Reset
31:0	Read/write access to accumulator 0	RW	0x00000000

SIO: INTERP0_ACCUM1 Register

Offset: 0x084

Table 48. INTERP0_ACCUM1 Register

Bits	Description	Type	Reset
31:0	Read/write access to accumulator 1	RW	0x00000000

SIO: INTERP0_BASE0 Register

Offset: 0x088

Table 49. INTERP0_BASE0 Register

Bits	Description	Type	Reset
31:0	Read/write access to BASE0 register.	RW	0x00000000

SIO: INTERP0_BASE1 Register

Offset: 0x08c

Table 50. INTERP0_BASE1 Register

Bits	Description	Type	Reset
31:0	Read/write access to BASE1 register.	RW	0x00000000

SIO: INTERP0_BASE2 Register

Offset: 0x090

Table 51. INTERP0_BASE2 Register

Bits	Description	Type	Reset
31:0	Read/write access to BASE2 register.	RW	0x00000000

SIO: INTERP0_POP_LANE0 Register

Offset: 0x094

Table 52. INTERP0_POP_LANE0 Register

Bits	Description	Type	Reset
31:0	Read LANE0 result, and simultaneously write lane results to both accumulators (POP).	RO	0x00000000

SIO: INTERP0_POP_LANE1 Register

Offset: 0x098

Table 53. INTERP0_POP_LANE1 Register

Bits	Description	Type	Reset
31:0	Read LANE1 result, and simultaneously write lane results to both accumulators (POP).	RO	0x00000000

SIO: INTERP0_POP_FULL Register

Offset: 0x09c

Table 54. INTERP0_POP_FULL Register

Bits	Description	Type	Reset
31:0	Read FULL result, and simultaneously write lane results to both accumulators (POP).	RO	0x00000000

SIO: INTERP0_PEEK_LANE0 Register

Offset: 0x0a0

Table 55. INTERP0_PEEK_LANE0 Register

Bits	Description	Type	Reset
31:0	Read LANE0 result, without altering any internal state (PEEK).	RO	0x00000000

SIO: INTERP0_PEEK_LANE1 Register

Offset: 0x0a4

Table 56. INTERP0_PEEK_LANE1 Register

Bits	Description	Type	Reset
31:0	Read LANE1 result, without altering any internal state (PEEK).	RO	0x00000000

SIO: INTERP0_PEEK_FULL Register

Offset: 0x0a8

Table 57. INTERP0_PEEK_FULL Register

Bits	Description	Type	Reset
31:0	Read FULL result, without altering any internal state (PEEK).	RO	0x00000000

SIO: INTERP0_CTRL_LANE0 Register

Offset: 0x0ac

Description

Control register for lane 0

Table 58. INTERP0_CTRL_LANE0 Register

Bits	Description	Type	Reset
31:26	Reserved.	-	-
25	**OVERF**: Set if either OVERF0 or OVERF1 is set.	RO	0x0
24	**OVERF1**: Indicates if any masked-off MSBs in ACCUM1 are set.	RO	0x0
23	**OVERF0**: Indicates if any masked-off MSBs in ACCUM0 are set.	RO	0x0
22	Reserved.	-	-
21	**BLEND**: Only present on INTERP0 on each core. If BLEND mode is enabled: - LANE1 result is a linear interpolation between BASE0 and BASE1, controlled by the 8 LSBs of lane 1 shift and mask value (a fractional number between 0 and 255/256ths) - LANE0 result does not have BASE0 added (yields only the 8 LSBs of lane 1 shift+mask value) - FULL result does not have lane 1 shift+mask value added (BASE2 + lane 0 shift+mask) LANE1 SIGNED flag controls whether the interpolation is signed or unsigned.	RW	0x0
20:19	**FORCE_MSB**: ORed into bits 29:28 of the lane result presented to the processor on the bus. No effect on the internal 32-bit datapath. Handy for using a lane to generate sequence of pointers into flash or SRAM.	RW	0x0
18	**ADD_RAW**: If 1, mask + shift is bypassed for LANE0 result. This does not affect FULL result.	RW	0x0
17	**CROSS_RESULT**: If 1, feed the opposite lane's result into this lane's accumulator on POP.	RW	0x0
16	**CROSS_INPUT**: If 1, feed the opposite lane's accumulator into this lane's shift + mask hardware. Takes effect even if ADD_RAW is set (the CROSS_INPUT mux is before the shift+mask bypass)	RW	0x0
15	**SIGNED**: If SIGNED is set, the shifted and masked accumulator value is sign-extended to 32 bits before adding to BASE0, and LANE0 PEEK/POP appear extended to 32 bits when read by processor.	RW	0x0

Bits	Description	Type	Reset
14:10	**MASK_MSB**: The most-significant bit allowed to pass by the mask (inclusive) Setting MSB < LSB may cause chip to turn inside-out	RW	0x00
9:5	**MASK_LSB**: The least-significant bit allowed to pass by the mask (inclusive)	RW	0x00
4:0	**SHIFT**: Logical right-shift applied to accumulator before masking	RW	0x00

SIO: INTERP0_CTRL_LANE1 Register

Offset: 0x0b0

Description

Control register for lane 1

Table 59. INTERP0_CTRL_LANE 1 Register

Bits	Description	Type	Reset
31:21	Reserved.	-	-
20:19	**FORCE_MSB**: ORed into bits 29:28 of the lane result presented to the processor on the bus. No effect on the internal 32-bit datapath. Handy for using a lane to generate sequence of pointers into flash or SRAM.	RW	0x0
18	**ADD_RAW**: If 1, mask + shift is bypassed for LANE1 result. This does not affect FULL result.	RW	0x0
17	**CROSS_RESULT**: If 1, feed the opposite lane's result into this lane's accumulator on POP.	RW	0x0
16	**CROSS_INPUT**: If 1, feed the opposite lane's accumulator into this lane's shift + mask hardware. Takes effect even if ADD_RAW is set (the CROSS_INPUT mux is before the shift+mask bypass)	RW	0x0
15	**SIGNED**: If SIGNED is set, the shifted and masked accumulator value is sign-extended to 32 bits before adding to BASE1, and LANE1 PEEK/POP appear extended to 32 bits when read by processor.	RW	0x0
14:10	**MASK_MSB**: The most-significant bit allowed to pass by the mask (inclusive) Setting MSB < LSB may cause chip to turn inside-out	RW	0x00
9:5	**MASK_LSB**: The least-significant bit allowed to pass by the mask (inclusive)	RW	0x00
4:0	**SHIFT**: Logical right-shift applied to accumulator before masking	RW	0x00

SIO: INTERP0_ACCUM0_ADD Register

Offset: 0x0b4

Table 60. INTERP0_ACCUM0_ADD Register

Bits	Description	Type	Reset
31:24	Reserved.	-	-
23:0	Values written here are atomically added to ACCUM0 Reading yields lane 0's raw shift and mask value (BASE0 not added).	RW	0x000000

SIO: INTERP0_ACCUM1_ADD Register

Offset: 0x0b8

Table 61. INTERP0_ACCUM1_ADD Register

Bits	Description	Type	Reset
31:24	Reserved.	-	-
23:0	Values written here are atomically added to ACCUM1 Reading yields lane 1's raw shift and mask value (BASE1 not added).	RW	0x000000

SIO: INTERP0_BASE_1AND0 Register

Offset: 0x0bc

Table 62. INTERP0_BASE_1AND0 Register

Bits	Description	Type	Reset
31:0	On write, the lower 16 bits go to BASE0, upper bits to BASE1 simultaneously. Each half is sign-extended to 32 bits if that lane's SIGNED flag is set.	WO	0x00000000

SIO: INTERP1_ACCUM0 Register

Offset: 0x0c0

Table 63. INTERP1_ACCUM0 Register

Bits	Description	Type	Reset
31:0	Read/write access to accumulator 0	RW	0x00000000

SIO: INTERP1_ACCUM1 Register

Offset: 0x0c4

Table 64. INTERP1_ACCUM1 Register

Bits	Description	Type	Reset
31:0	Read/write access to accumulator 1	RW	0x00000000

SIO: INTERP1_BASE0 Register

Offset: 0x0c8

Table 65. INTERP1_BASE0 Register

Bits	Description	Type	Reset
31:0	Read/write access to BASE0 register.	RW	0x00000000

SIO: INTERP1_BASE1 Register

Offset: 0x0cc

Table 66. INTERP1_BASE1 Register

Bits	Description	Type	Reset
31:0	Read/write access to BASE1 register.	RW	0x00000000

SIO: INTERP1_BASE2 Register

Offset: 0x0d0

Table 67. INTERP1_BASE2 Register

Bits	Description	Type	Reset
31:0	Read/write access to BASE2 register.	RW	0x00000000

SIO: INTERP1_POP_LANE0 Register

Offset: 0x0d4

Table 68. INTERP1_POP_LANE0 Register

Bits	Description	Type	Reset
31:0	Read LANE0 result, and simultaneously write lane results to both accumulators (POP).	RO	0x00000000

SIO: INTERP1_POP_LANE1 Register

Offset: 0x0d8

Table 69. INTERP1_POP_LANE1 Register

Bits	Description	Type	Reset
31:0	Read LANE1 result, and simultaneously write lane results to both accumulators (POP).	RO	0x00000000

SIO: INTERP1_POP_FULL Register

Offset: 0x0dc

Table 70. INTERP1_POP_FULL Register

Bits	Description	Type	Reset
31:0	Read FULL result, and simultaneously write lane results to both accumulators (POP).	RO	0x00000000

SIO: INTERP1_PEEK_LANE0 Register

Offset: 0x0e0

Table 71. INTERP1_PEEK_LANE0 Register

Bits	Description	Type	Reset
31:0	Read LANE0 result, without altering any internal state (PEEK).	RO	0x00000000

SIO: INTERP1_PEEK_LANE1 Register

Offset: 0x0e4

Table 72. INTERP1_PEEK_LANE1 Register

Bits	Description	Type	Reset
31:0	Read LANE1 result, without altering any internal state (PEEK).	RO	0x00000000

SIO: INTERP1_PEEK_FULL Register

Offset: 0x0e8

Table 73. INTERP1_PEEK_FULL Register

Bits	Description	Type	Reset
31:0	Read FULL result, without altering any internal state (PEEK).	RO	0x00000000

SIO: INTERP1_CTRL_LANE0 Register

Offset: 0x0ec

Description

Control register for lane 0

Table 74. INTERP1_CTRL_LANE0 Register

Bits	Description	Type	Reset
31:26	Reserved.	-	-
25	**OVERF**: Set if either OVERF0 or OVERF1 is set.	RO	0x0
24	**OVERF1**: Indicates if any masked-off MSBs in ACCUM1 are set.	RO	0x0
23	**OVERF0**: Indicates if any masked-off MSBs in ACCUM0 are set.	RO	0x0

Bits	Description	Type	Reset
22	**CLAMP**: Only present on INTERP1 on each core. If CLAMP mode is enabled: - LANE0 result is shifted and masked ACCUM0, clamped by a lower bound of BASE0 and an upper bound of BASE1. - Signedness of these comparisons is determined by LANE0_CTRL_SIGNED	RW	0x0
21	Reserved.	-	-
20:19	**FORCE_MSB**: ORed into bits 29:28 of the lane result presented to the processor on the bus. No effect on the internal 32-bit datapath. Handy for using a lane to generate sequence of pointers into flash or SRAM.	RW	0x0
18	**ADD_RAW**: If 1, mask + shift is bypassed for LANE0 result. This does not affect FULL result.	RW	0x0
17	**CROSS_RESULT**: If 1, feed the opposite lane's result into this lane's accumulator on POP.	RW	0x0
16	**CROSS_INPUT**: If 1, feed the opposite lane's accumulator into this lane's shift + mask hardware. Takes effect even if ADD_RAW is set (the CROSS_INPUT mux is before the shift+mask bypass)	RW	0x0
15	**SIGNED**: If SIGNED is set, the shifted and masked accumulator value is sign-extended to 32 bits before adding to BASE0, and LANE0 PEEK/POP appear extended to 32 bits when read by processor.	RW	0x0
14:10	**MASK_MSB**: The most-significant bit allowed to pass by the mask (inclusive) Setting MSB < LSB may cause chip to turn inside-out	RW	0x00
9:5	**MASK_LSB**: The least-significant bit allowed to pass by the mask (inclusive)	RW	0x00
4:0	**SHIFT**: Logical right-shift applied to accumulator before masking	RW	0x00

SIO: INTERP1_CTRL_LANE1 Register

Offset: 0x0f0

Description

Control register for lane 1

Table 75. INTERP1_CTRL_LANE 1 Register

Bits	Description	Type	Reset
31:21	Reserved.	-	-
20:19	**FORCE_MSB**: ORed into bits 29:28 of the lane result presented to the processor on the bus. No effect on the internal 32-bit datapath. Handy for using a lane to generate sequence of pointers into flash or SRAM.	RW	0x0
18	**ADD_RAW**: If 1, mask + shift is bypassed for LANE1 result. This does not affect FULL result.	RW	0x0
17	**CROSS_RESULT**: If 1, feed the opposite lane's result into this lane's accumulator on POP.	RW	0x0

Bits	Description	Type	Reset
16	**CROSS_INPUT**: If 1, feed the opposite lane's accumulator into this lane's shift + mask hardware. Takes effect even if ADD_RAW is set (the CROSS_INPUT mux is before the shift+mask bypass)	RW	0x0
15	**SIGNED**: If SIGNED is set, the shifted and masked accumulator value is sign-extended to 32 bits before adding to BASE1, and LANE1 PEEK/POP appear extended to 32 bits when read by processor.	RW	0x0
14:10	**MASK_MSB**: The most-significant bit allowed to pass by the mask (inclusive) Setting MSB < LSB may cause chip to turn inside-out	RW	0x00
9:5	**MASK_LSB**: The least-significant bit allowed to pass by the mask (inclusive)	RW	0x00
4:0	**SHIFT**: Logical right-shift applied to accumulator before masking	RW	0x00

SIO: INTERP1_ACCUM0_ADD Register

Offset: 0x0f4

Table 76. INTERP1_ACCUM0_ADD Register

Bits	Description	Type	Reset
31:24	Reserved.	-	-
23:0	Values written here are atomically added to ACCUM0 Reading yields lane 0's raw shift and mask value (BASE0 not added).	RW	0x000000

SIO: INTERP1_ACCUM1_ADD Register

Offset: 0x0f8

Table 77. INTERP1_ACCUM1_ADD Register

Bits	Description	Type	Reset
31:24	Reserved.	-	-
23:0	Values written here are atomically added to ACCUM1 Reading yields lane 1's raw shift and mask value (BASE1 not added).	RW	0x000000

SIO: INTERP1_BASE_1AND0 Register

Offset: 0x0fc

Table 78. INTERP1_BASE_1AND0 Register

Bits	Description	Type	Reset
31:0	On write, the lower 16 bits go to BASE0, upper bits to BASE1 simultaneously. Each half is sign-extended to 32 bits if that lane's SIGNED flag is set.	WO	0x00000000

SIO: SPINLOCK0, SPINLOCK1, …, SPINLOCK30, SPINLOCK31 Registers

Offsets: 0x100, 0x104, …, 0x178, 0x17c

Table 79. SPINLOCK0, SPINLOCK1, …, SPINLOCK30, SPINLOCK31 Registers

Bits	Description	Type	Reset
31:0	Reading from a spinlock address will: - Return 0 if lock is already locked - Otherwise return nonzero, and simultaneously claim the lock Writing (any value) releases the lock. If core 0 and core 1 attempt to claim the same lock simultaneously, core 0 wins. The value returned on success is 0x1 << lock number.	RW	0x00000000

2.3.2. Interrupts

Each core is equipped with a standard ARM Nested Vectored Interrupt Controller (NVIC) which has 32 interrupt inputs. Each NVIC has the same interrupts routed to it, with the exception of the GPIO interrupts: there is one GPIO interrupt per bank, per core. These are completely independent, so e.g. core 0 can be interrupted by GPIO 0 in bank 0, and core 1 by GPIO 1 in the same bank.

On RP2040, only the lower 26 IRQ signals are connected on the NVIC, and IRQs 26 to 31 are tied to zero (never firing). The core can still be forced to enter the relevant interrupt handler by writing bits 26 to 31 in the NVIC `ISPR` register.

Table 80. Interrupts

IRQ	Interrupt Source	IRQ	Interrupt Source	IRQ	Interrupt Source	IRQ	Interrupt Source	IRQ	Interrupt Source
0	TIMER_IRQ_0	6	XIP_IRQ	12	DMA_IRQ_1	18	SPI0_IRQ	24	I2C1_IRQ
1	TIMER_IRQ_1	7	PIO0_IRQ_0	13	IO_IRQ_BANK0	19	SPI1_IRQ	25	RTC_IRQ
2	TIMER_IRQ_2	8	PIO0_IRQ_1	14	IO_IRQ_QSPI	20	UART0_IRQ		
3	TIMER_IRQ_3	9	PIO1_IRQ_0	15	SIO_IRQ_PROC0	21	UART1_IRQ		
4	PWM_IRQ_WRAP	10	PIO1_IRQ_1	16	SIO_IRQ_PROC1	22	ADC_IRQ_FIFO		
5	USBCTRL_IRQ	11	DMA_IRQ_0	17	CLOCKS_IRQ	23	I2C0_IRQ		

NOTE

`XIP_IRQ` is from the SSI block that makes up part of the XIP block. It could be used in a configuration where code is running from SRAM instead of flash. In this configuration, the XIP block could be used as a normal SSI peripheral.

Nested interrupts are supported in hardware: a lower-priority interrupt can be preempted by a higher-priority interrupt (or another exception e.g. HardFault), and the lower-priority interrupt will resume once higher-priority exceptions have completed. The priority order is determined by:

- First, the dynamic priority level configured per interrupt by the NVIC_IPR0-7 registers. The Cortex-M0+ implements the two most significant bits of an 8-bit priority field, so four priority levels are available, and the numerically-lowest level (level 0) is the highest priority.
- Second, for interrupts with the same dynamic priority level, the lower-numbered IRQ has higher priority (using the IRQ numbers given in the table above).

Some care has gone into arranging the RP2040 interrupt table to give a sensible default priority ordering, but individual interrupts can be raised or lowered in priority, using NVIC_IPR0 through NVIC_IPR7, to suit a particular use case.

The 26 system IRQ signals are masked (NMI mask) and then ORed together creating the NMI signal for the core. The NMI mask for each core can be configured using PROC0_NMI_MASK and PROC1_NMI_MASK in the Syscfg register block. Each of these registers has one bit for each system interrupt, and the each core's NMI is asserted if a system interrupt is asserted **and** the corresponding NMI mask bit is set for that core.

CAUTION

If the watchdog is armed, and some bits are set on the core 1 NMI mask, the RESETS block (and hence Syscfg) should be included in the watchdog reset list. Otherwise, following a watchdog event, core 1 NMI may be asserted when the core enter the bootrom. It is safe for core 0 to take an NMI when entering the bootrom (the handler will clear the NMI mask).

2.3.3. Event Signals

The Cortex-M0+ can enter a sleep state until an "event" (or interrupt) takes place, using the `WFE` instruction. It can also generate events, using the `SEV` instruction. On RP2040 the event signals are cross-wired between the two processors, so that an event sent by one processor will be received on the other.

NOTE

The event flag is "sticky", so if both processors send an event (`SEV`) simultaneously, and then both go to sleep (`WFE`), they will both wake immediately, rather than getting stuck in a sleep state.

While in a `WFE` (or `WFI`) sleep state, the processor can shut off its internal clock gates, consuming much less power. When **both** processors are sleeping, and the DMA is inactive, RP2040 as a whole can enter a sleep state, disabling clocks on unused infrastructure such as the busfabric, and waking automatically when one of the processors wakes. See Section 2.11.2.

2.3.4. Debug

The 2-wire Serial Wire Debug (SWD) port provides access to hardware and software debug features including:

- Loading firmware into SRAM or external flash memory
- Control of processor execution: run/halt, step, set breakpoints, other standard Arm debug functionality
- Access to processor architectural state
- Access to memory and memory-mapped IO via the system bus

The SWD bus is exposed on two dedicated pins and is immediately available after power-on.

NOTE

We recommend a max SWD frequency of 24MHz. This depends heavily on your setup. You may need to run much slower (1MHz) depending on the quality and length of your cables.

Debug access is via independent DAPs (one per core) attached to a shared multidrop SWD bus (SWD v2). Each DAP will only respond to debug commands if correctly addressed by a SWD `TARGETSEL` command; all others tristate their outputs. Additionally, a Rescue DP (see Section 2.3.4.2) is available which is connected to system control features. Default addresses of each debug port are given below:

- Core 0: `0x01002927`
- Core 1: `0x11002927`
- Rescue DP: `0xf1002927`

The Instance IDs (top 4 bits of ID above) can be changed via a sysconfig register which may be useful in a multichip application. However note that ID=0xf is reserved for the internal Rescue DP (see Section 2.3.4.2).

Figure 10. RP2040 Debugging

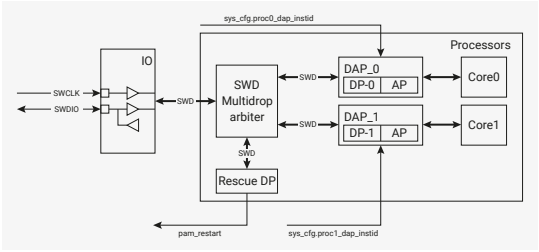

2.3.4.1. Software control of SWD pins

The SWD pins for Core 0 and Core 1 can be bit-banged via registers in syscfg (see DBGFORCE). This means that Core 1 could run a USB application that allows debug of Core 0, or similar.

2.3.4.2. Rescue DP

The Rescue DP (debug port) is available over the SWD bus and is only intended for use in the specific case where the chip has locked up, for example if code has been programmed into flash which permanently halts the system clock: in such a case, the normal debugger can not communicate with the processors to return the system to a working state, so more drastic action is needed. A `rescue` is invoked by setting the CDBGPWRUPREQ bit in the Rescue DP's CTRL/STAT register.

This causes a hard reset of the chip (functionally similar to a power-on-reset), and sets a flag in the Chip Level Reset block to indicate that a rescue reset took place. The bootrom checks this flag almost immediately in the initial boot process (before watchdog, flash or USB boot), acknowledges by clearing the bit, then halts the processor. This leaves the system in a safe state, with the system clock running, so that the debugger can reattach to the cores and load fresh code.

For a practical example of using the Rescue DP, see the **Hardware design with RP2040** book.

2.4. Cortex-M0+

> **ARM Documentation**
>
> Excerpted from the Cortex-M0+ Technical Reference Manual. Used with permission.

The ARM Cortex-M0+ processor is a very low gate count, highly energy efficient processor that is intended for microcontroller and deeply embedded applications that require an area optimized, low-power processor.

2.4.1. Features

The ARM Cortex-M0+ processor features and benefits are:

- Tight integration of system peripherals reduces area and development costs.
- Thumb instruction set combines high code density with 32-bit performance.
- Support for single-cycle I/O access.
- Power control optimization of system components.
- Integrated sleep modes for low-power consumption.
- Fast code execution enables running the processor with a slower clock or increasing sleep mode time.

- Optimized code fetching for reduced flash and ROM power consumption.
- Hardware multiplier.
- Deterministic, high-performance interrupt handling for time-critical applications.
- Deterministic instruction cycle timing.
- Support for system level debug authentication.
- Serial Wire Debug reduces the number of pins required for debugging.

2.4.1.1. Interfaces

The interfaces included in the processor for external access include:

- External AHB-Lite interface to busfabric
- Debug Access Port (DAP)
- Single-cycle I/O Port to SIO peripherals

2.4.1.2. Configuration

Each processor is configured with the following features:

- Architectural clock gating (for power saving)
- Little Endian bus access
- Four Breakpoints
- Debug support (via 2-wire debug pins `SWD`/`SWCLK`)
- 32-bit instruction fetch (to match 32-bit data bus)
- IOPORT (for low latency access to local peripherals (see SIO)
- 26 interrupts
- 8 MPU regions
- All registers reset on powerup
- Fast multiplier (MULS 32×32 single cycle)
- SysTick timer
- Vector Table Offset Register (VTOR)
- 34 WIC (Wake-up Interrupt Controller) lines (32 IRQ and NMI, RXEV)
- DAP feature: Halt event support
- DAP feature: SerialWire debug interface (protocol 2 with multidrop support)
- DAP feature: Micro Trace Buffer (MTB) is not implemented

Architectural clock gating allows the processor core to support SLEEP and DEEPSLEEP power states by disabling the clock to parts of the processor core. Note that power gating is not supported.

Each M0+ core has its own interrupt controller which can individually mask out interrupt sources as required. The same interrupts are routed to both M0+ cores.

2.4.1.3. ARM architecture

The processor implements the ARMv6-M architecture profile. See the ARMv6-M Architecture Reference Manual, and for

further details refer to the ARM Cortex M0+ Technical Reference Manual.

2.4.2. Functional Description

2.4.2.1. Overview

The Cortex-M0+ processor is a configurable, multistage, 32-bit RISC processor. It has an AMBA AHB-Lite interface and includes an NVIC component. It also has hardware debug, single-cycle I/O interfacing, and memory-protection functionality. The processor can execute Thumb code and is compatible with other Cortex-M profile processors.

Figure 11 shows the functional blocks of the processor and surrounding blocks.

Figure 11. Cortex M0+ Functional block diagram

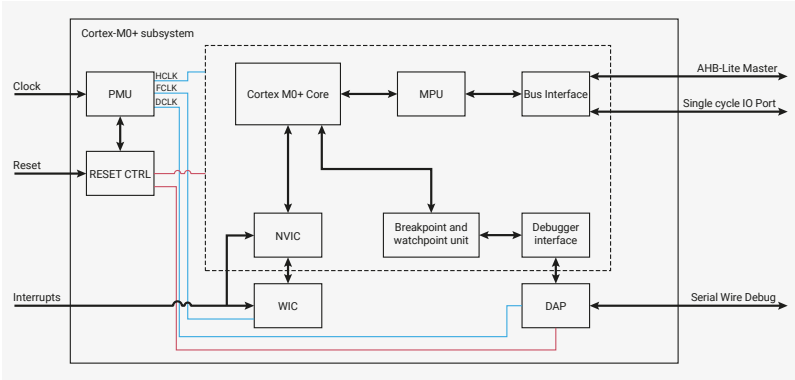

2.4.2.2. Features

The M0+ features:

- The ARMv6-M Thumb® instruction set.
- Thumb-2 technology.
- An ARMv6-M compliant 24-bit SysTick timer.
- A 32-bit hardware multiplier. This is the standard single-cycle multiplier
- The ability to have deterministic, fixed-latency, interrupt handling.
- Load/store multiple instructions that can be abandoned and restarted to facilitate rapid interrupt handling.
- C Application Binary Interface compliant exception model. This is the ARMv6-M, C Application Binary Interface (C-ABI) compliant exception model that enables the use of pure C functions as interrupt handlers.
- Low power sleep-mode entry using Wait For Interrupt (WFI), Wait For Event (WFE) instructions, or the return from interrupt sleep-on-exit feature.

2.4.2.3. NVIC features

The Nested Vectored Interrupt Controller (NVIC) features are:

- 26 external interrupt inputs, each with four levels of priority.
- Dedicated Non-Maskable Interrupt (NMI) input (which can be driven from any standard interrupt source)
- Support for both level-sensitive and pulse-sensitive interrupt lines.
- Wake-up Interrupt Controller (WIC), providing ultra-low power sleep mode support.
- Relocatable vector table.

NOTE

The NVIC supports hardware nesting of exceptions, e.g. an interrupt handler may itself be interrupted if a higher-priority interrupt request arrives whilst the handler is running.

Further details available in Section 2.4.5.

2.4.2.4. Debug features

Debug features are:

- Four hardware breakpoints.
- Two watchpoints.
- Program Counter Sampling Register (PCSR) for non-intrusive code profiling.
- Single step and vector catch capabilities.
- Support for unlimited software breakpoints using BKPT instruction.
- Non-intrusive access to core peripherals and zero-waitstate system slaves through a compact bus matrix. A debugger can access these devices, including memory, even when the processor is running.
- Full access to core registers when the processor is halted.
- CoreSight compliant debug access through a Debug Access Port (DAP) supporting Serial Wire debug connections.

2.4.2.4.1. Debug Access Port

The processor is implemented with a low gate count Debug Access Port (DAP). The low gate count Debug Access Port (DAP) provides a Serial Wire debug-port, and connects to the processor slave port to provide full system-level debug access. For more information on DAP, see the ADI v5.1 version of the ARM Debug Interface v5, Architecture Specification

2.4.2.5. MPU features

Memory Protection Unit (MPU) features are:

- Eight user-configurable memory regions.
- Eight sub-region disables per region.
- Execute never (XN) support.
- Default memory map support.

Further details available in Section 2.4.6.

2.4.2.6. AHB-Lite interface

Transactions on the AHB-Lite interface are always marked as non-sequential. Processor accesses and debug accesses share the external interface to external AHB peripherals. The processor accesses take priority over debug accesses. Any vendor-specific components can populate this bus.

NOTE

Instructions are only fetched using the AHB-Lite interface. To optimize performance, the Cortex-M0+ processor fetches ahead of the instruction it is executing. To minimize power consumption, the fetch ahead is limited to a maximum of 32 bits.

2.4.2.7. Single-cycle I/O port

The processor implements a single-cycle I/O port that provides high speed access to tightly-coupled peripherals, such as general-purpose-I/O (GPIO). The port is accessible both by loads and stores from either the processor or the debugger. You cannot execute code from the I/O port.

2.4.2.8. Power Management Unit

Each processor has its own Power Management Unit (PMU) which allows power saving by turning off clocks to parts of the processor core. There are no separate power domains on RP2040.

The PMU runs from the processor clock which is controlled from the chip level clocks block. The PMU can control the following clock domains within the processor:

- A debug clock containing the processor debug resources and the rest of the DAP.
- A system clock containing the NVIC.
- A processor clock containing the core and associated interfaces

Control is limited to clock enable/disable. When enabled, all domains run at the same clock speed.

The PMU also interfaces with the WIC, to ensure that power-down and wake-up behaviours are transparent to software and work with clocking and sleeping requirements. This includes SLEEP or DEEPSLEEP support as controlled in `SCR` register.

2.4.2.8.1. Power Management

RP2040 ARM Cortex M0+ uses ARMv6-M which supports the use of Wait For Interrupt (`WFI`) and Wait For Event (`WFE`) instructions as part of system power management:

`WFI` provides a mechanism for hardware support of entry to one or more sleep states. Hardware can suspend execution until a wakeup event occurs.

`WFE` provides a mechanism for software to suspend program execution until a wakeup condition occurs with minimal or no impact on wakeup latency. Both `WFI` and `WFE` are hint instructions that might have no effect on program execution. Normally, they are used in software idle loops that resume program execution only after an interrupt or event of interest occurs.

NOTE

Code using `WFE` and `WFI` must handle any spurious wakeup events caused by a debug halt or other reasons.

Refer to the SDK and ARMv6-M guide for further information.

2.4.2.8.2. Wait For Event and Send Event

RP2040 can support software-based synchronization to system events using the Send-Event (`SEV`) and `WFE` hint instructions. Software can:

- use the `WFE` instruction to indicate that it is able to suspend execution of a process or thread until an event occurs, permitting hardware to enter a low power state.

- rely on a mechanism that is transparent to software and provides low latency wakeup.

The WFE mechanism relies on hardware and software working together to achieve energy saving. For example, stalling execution of a processor until a device or another processor has set a flag:

- the hardware provides the mechanism to enter the WFE low-power state.
- software enters a polling loop to determine when the flag is set:
- the polling processor issues a WFE instruction as part of a polling loop if the flag is clear.
- an event is generated (hardware interrupt or Send-Event instruction from another processor) when the flag is set.

WFE wake up events

The following events are WFE wake up events:

- the execution of an SEV instruction on the other processor
- any exception entering the pending state if SEVONPEND in the System Control Register is set to 1.
- an asynchronous exception at a priority that preempts any currently active exceptions.
- a debug event with debug enabled.

The Event Register

The Event Register is a single bit register. When set, an Event Register indicates that an event has occurred, since the register was last cleared, that might prevent the processor having to suspend operation on issuing a WFE instruction. The following conditions apply to the Event Register:

- A reset clears the Event Register.
- Any WFE wakeup event, or the execution of an exception return instruction, sets the Event Register.
- A WFE instruction clears the Event Register.
- Software cannot read or write the value of the Event Register directly.

The Send-Event instruction

The Send-Event (SEV) instruction causes an event to be signalled to the other processor. The Send-Event instruction generates a wakeup event.

The Wait For Event instruction

The action of the WFE instruction depends on the state of the Event Register:

- If the Event Register is set, the instruction clears the register and returns immediately.
- If the Event Register is clear the processor can suspend execution and enter a low-power state. It can remain in that state until the processor detects a WFE wakeup event or a reset. When the processor detects a WFE wakeup event, the WFE instruction completes.

WFE wakeup events can occur before a WFE instruction is issued. Software using the WFE mechanism must tolerate spurious wake up events, including multiple wakeups.

2.4.2.8.3. Wait For Interrupt

RP2040 supports Wait For Interrupt through the hint instruction, WFI.

When a processor issues a WFI instruction it can suspend execution and enter a low-power state. It can remain in that state until the processor detects one of the following WFI wake up events:

- A reset.
- An asynchronous exception at a priority that, if PRIMASK.PM was set to 0, would preempt any currently active exceptions.

Note

If PRIMASK.PM is set to 1, an asynchronous exception that has a higher group priority than any active exception results in a WFI instruction exit. If the group priority of the exception is less than or equal to the execution group priority, the exception is ignored.

- If debug is enabled, a debug event.
- A WFI wakeup event.

The WFI instruction completes when the hardware detects a WFI wake up event.

The processor recognizes WFI wake up events only after issuing the WFI instruction.

2.4.2.8.4. Wakeup Interrupt Controller

The Wakeup Interrupt Controller (WIC) is used to wake the processor from a DEEPSLEEP state as controlled by the SCR register. In a DEEPSLEEP state clocks to the processor core and NVIC are not running. It can take a few cycles to wake from a DEEPSLEEP state.

The WIC takes inputs from the receive event signal (from the other processor), 32 interrupts lines, and NMI.

For more power saving, RP2040 supports system level power saving modes as defined in Section 2.11 which also includes code examples.

2.4.2.9. Reset Control

The Cortex M0+ Reset Control block controls the following resets:

- Debug reset
- M0+ core reset
- PMU reset

After power up, both processors are released from reset (see details in Section 2.13.2). This releases reset to Debug, M0+ core and PMU.

Once running, resets can be triggered from the Debugger, NVIC (using AIRCR.SYSRESETREQ), or the RP2040 Power On State Machine controller (see details in Section 2.13). The NVIC only resets the Cortex-M0+ processor core (not the Debug or PMU), whereas the Power On State Machine controller can reset the processor subsystem which asserts all resets in the subsystem (Debug, M0+ core, PMU).

2.4.3. Programmer's model

2.4.3.1. About the programmer's model

The ARMv6-M Architecture Reference Manual provides a complete description of the programmer's model. This chapter gives an overview of the Cortex-M0+ programmer's model that describes the implementation-defined options. It also contains the ARMv6-M Thumb instructions it uses and their cycle counts for the processor. Additional details are in following chapters

- Section 2.4.4 summarizes the system control features of the programmer's model.
- Section 2.4.5 summarizes the NVIC features of the programmer's model.
- Section 2.3.4 summarizes the Debug features of the programmer's model.

2.4.3.2. Modes of operation and execution

See the ARMv6-M Architecture Reference Manual for information about the modes of operation and execution.

2.4.3.3. Instruction set summary

The processor implements the ARMv6-M Thumb instruction set, including a number of 32-bit instructions that use Thumb-2 technology. The ARMv6-M instruction set comprises:

- All of the 16-bit Thumb instructions from ARMv7-M excluding CBZ, CBNZ and IT.
- The 32-bit Thumb instructions BL, DMB, DSB, ISB, MRS and MSR.

Table 81 shows the Cortex-M0+ instructions and their cycle counts. The cycle counts are based on a system with zero wait-states.

Table 81. Cortex-M0+ instruction summary

Operation	Description	Assembler	Cycles
Move	8-bit immediate	`MOVS Rd, #<imm>`	1
	Lo to Lo	`MOVS Rd, Rm`	1
	Any to Any	`MOV Rd, Rm`	1
	Any to PC	`MOV PC, Rm`	2
Add	3-bit immediate	`ADDS Rd, Rn, #<imm>`	1
	All registers Lo	`ADDS Rd, Rn, Rm`	1
	Any to Any	`ADD Rd, Rd, Rm`	1
	Any to PC	`ADD PC, PC, Rm`	2
	8-bit immediate	`ADDS Rd, Rd, #<imm>`	1
	With carry	`ADCS Rd, Rd, Rm`	1
	Immediate to SP	`ADD SP, SP, #<imm>`	1
	Form address from SP	`ADD Rd, SP, #<imm>`	1
	Form address from PC	`ADR Rd, <label>`	1
Subtract	Lo and Lo	`SUBS Rd, Rn, Rm`	1
	3-bit immediate	`SUBS Rd, Rn, #<imm>`	1
	8-bit immediate	`SUBS Rd, Rd, #<imm>`	1
	With carry	`SBCS Rd, Rd, Rm`	1
	Immediate from SP	`SUB SP, SP, #<imm>`	1
	Negate	`RSBS Rd, Rn, #0`	1
Multiply	Multiply	`MULS Rd, Rm, Rd`	1
Compare	Compare	`CMP Rn, Rm`	1
	Negative	`CMN Rn, Rm`	1
	Immediate	`CMP Rn, #<imm>`	1
Logical	AND	`ANDS Rd, Rd, Rm`	1
	Exclusive OR	`EORS Rd, Rd, Rm`	1
	OR	`ORRS Rd, Rd, Rm`	1

Operation	Description	Assembler	Cycles
	Bit clear	`BICS Rd, Rd, Rm`	1
	Move NOT	`MVNS Rd, Rm`	1
	AND test	`TST Rn, Rm`	1
Shift	Logical shift left by immediate	`LSLS Rd, Rm, #<shift>`	1
	Logical shift left by register	`LSLS Rd, Rd, Rs`	1
	Logical shift right by immediate	`LSRS Rd, Rm, #<shift>`	1
	Logical shift right by register	`LSRS Rd, Rd, Rs`	1
	Arithmetic shift right	`ASRS Rd, Rm, #<shift>`	1
	Arithmetic shift right by register	`ASRS Rd, Rd, Rs`	1
Rotate	Rotate right by register	`RORS Rd, Rd, Rs`	1
Load	Word, immediate offset	`LDR Rd, [Rn, #<imm>]`	2 or 1[a]
	Halfword, immediate offset	`LDRH Rd, [Rn, #<imm>]`	2 or 1[a]
	Byte, immediate offset	`LDRB Rd, [Rn, #<imm>]`	2 or 1[a]
	Word, register offset	`LDR Rd, [Rn, Rm]`	2 or 1[a]
	Halfword, register offset	`LDRH Rd, [Rn, Rm]`	2 or 1[a]
	Signed halfword, register offset	`LDRSH Rd, [Rn, Rm]`	2 or 1[a]
	Byte, register offset	`LDRB Rd, [Rn, Rm]`	2 or 1[a]
	Signed byte, register offset	`LDRSB Rd, [Rn, Rm]`	2 or 1[a]
	PC-relative	`LDR Rd, <label>`	2 or 1[a]
	SP-relative	`LDR Rd, [SP, #<imm>]`	2 or 1[a]
	Multiple, excluding base	`LDM Rn!, {<loreglist>}`	1+N[b]
	Multiple, including base	`LDM Rn, {<loreglist>}`	1+N[b]
Store	Word, immediate offset	`STR Rd, [Rn, #<imm>]`	2 or 1[a]
	Halfword, immediate offset	`STRH Rd, [Rn, #<imm>]`	2 or 1[a]
	Byte, immediate offset	`STRB Rd, [Rn, #<imm>]`	2 or 1[a]
	Word, register offset	`STR Rd, [Rn, Rm]`	2 or 1[a]
	Halfword, register offset	`STRH Rd, [Rn, Rm]`	2 or 1[a]
	Byte, register offset	`STRB Rd, [Rn, Rm]`	2 or 1[a]
	SP-relative	`STR Rd, [SP, #<imm>]`	2 or 1[a]
	Multiple	`STM Rn!, {<loreglist>}`	1+N[b]
Push	Push	`PUSH {<loreglist>}`	1+N[b]
	Push with link register	`PUSH {<loreglist>, LR}`	1+N[c]
Pop	Pop	`POP {<loreglist>}`	1+N[b]
	Pop and return	`POP {<loreglist>, PC}`	3+N[c]
Branch	Conditional	`B<cc> <label>`	1 or 2[d]
	Unconditional	`B <label>`	2

Operation	Description	Assembler	Cycles
	With link	`BL <label>`	3
	With exchange	`BX Rm`	2
	With link and exchange	`BLX Rm`	2
Extend	Signed halfword to word	`SXTH Rd, Rm`	1
	Signed byte to word	`SXTB Rd, Rm`	1
	Unsigned halfword	`UXTH Rd, Rm`	1
	Unsigned byte	`UXTB Rd, Rm`	1
Reverse	Bytes in word	`REV Rd, Rm`	1
	Bytes in both halfwords	`REV16 Rd, Rm`	1
	Signed bottom half word	`REVSH Rd, Rm`	1
State	change Supervisor Call	`SVC #<imm>`	- [e]
	Disable interrupts	`CPSID i`	1
	Enable interrupts	`CPSIE i`	1
	Read special register	`MRS Rd, <specreg>`	3
	Write special register	`MSR <specreg>, Rn`	3
	Breakpoint	`BKPT #<imm>`	- [e]
Hint	Send-Event	`SEV`	1
	Wait For Event	`WFE`	2[f]
	Wait For Interrupt	`WFI`	2[f]
	Yield	`YIELD`	1[f]
	No operation	`NOP`	1
Barriers	Instruction synchronization	`ISB`	3
	Data memory	`DMB`	3
	Data synchronization	`DSB`	3

Table Notes

[a] 2 if to AHB interface or SCS, 1 if to single-cycle I/O port.
[b] N is the number of elements in the list.
[c] N is the number of elements in the list including PC or LR.
[d] 2 if taken, 1 if not-taken.
[e] Cycle count depends on processor and debug configuration.
[f] Excludes time spent waiting for an interrupt or event.
[g] Executes as NOP.

See the ARMv6-M Architecture Reference Manual for more information about the ARMv6-M Thumb instructions.

2.4.3.4. Memory model

The processor contains a bus matrix that arbitrates the processor core and Debug Access Port (DAP) memory accesses to both the external memory system and to the internal NVIC and debug components.

Priority is always given to the processor to ensure that any debug accesses are as non-intrusive as possible. For a zero

wait-state system, all debug accesses to system memory, NVIC, and debug resources are completely non-intrusive for typical code execution.

The system memory map is ARMv6-M architecture compliant, and is common both to the debugger and processor accesses. Transactions are routed as follows:

- All accesses below `0xd0000000` or above `0xefffffff` appear as AHB-Lite transactions on the AHB-Lite master port of the processor.
- Accesses in the range `0xd0000000` to `0xdfffffff` are handled by the SIO.
- Accesses in the range `0xe0000000` to `0xefffffff` are handled within the processor and do not appear on the AHB-Lite master port of the processor.

The processor supports only word size accesses in the range `0xd0000000` - `0xefffffff`.

Table 82 shows the code, data, and device suitability for each region of the default memory map. This is the memory map used by implementations when the MPU is disabled. The attributes and permissions of all regions, except that targeting the Cortex-M0+ NVIC and debug components, can be modified using an implemented MPU.

Table 82. M0+ Default memory map usage

Address range	Code	Data	Device
`0xf0000000` - `0xffffffff`	No	No	Yes
`0xe0000000` - `0xefffffff`	No	No	No [a]
`0xa0000000` - `0xdfffffff`	No	No	Yes
`0x60000000` - `0x9fffffff`	Yes	Yes	No
`0x40000000` - `0x5fffffff`	No	No	Yes
`0x20000000` - `0x3fffffff`	Yes	Yes	No
`0x00000000` - `0x1fffffff`	Yes	Yes	No

[a]. Space reserved for Cortex-M0+ NVIC and debug components.

Note

Regions not marked as suitable for code behave as eXecute-Never (XN) and generate a HardFault exception if code attempts to execute from this location.

See the ARMv6-M Architecture Reference Manual for more information about the memory model.

2.4.3.5. Processor core registers summary

Table 83 shows the processor core register set summary. Each of these registers is 32 bits wide.

Table 83. M0+ processor core register set summary

Name	Description
R0-R12	R0-R12 are general-purpose registers for data operations.
MSP/PSP (R13)	The Stack Pointer (SP) is register R13. In Thread mode, the CONTROL register indicates the stack pointer to use, Main Stack Pointer (MSP) or Process Stack Pointer (PSP).
LR (R14)	The Link Register (LR) is register R14. It stores the return information for subroutines, function calls, and exceptions.
PC (R15)	The Program Counter (PC) is register R15. It contains the current program address.

Name	Description
PSR	The Program Status Register (PSR) combines: • Application Program Status Register (APSR). • Interrupt Program Status Register (IPSR). • Execution Program Status Register (EPSR). These registers provide different views of the PSR.
PRIMASK	The PRIMASK register prevents activation of all exceptions with configurable priority.
CONTROL	The CONTROL register controls the stack used, the code privilege level, when the processor is in Thread mode.

Note

See the ARMv6-M Architecture Reference Manual for information about the processor core registers and their addresses, access types, and reset values.

2.4.3.6. Exceptions

This section describes the exception model of the processor.

2.4.3.6.1. Exception handling

The processor implements advanced exception and interrupt handling, as described in the ARMv6-M Architecture Reference Manual. To minimize interrupt latency, the processor abandons any load-multiple or store-multiple instruction to take any pending interrupt. On return from the interrupt handler, the processor restarts the load-multiple or store-multiple instruction from the beginning.

This means that software must not use load-multiple or store-multiple instructions when a device is accessed in a memory region that is read-sensitive or sensitive to repeated writes. The software must not use these instructions in any case where repeated reads or writes might cause inconsistent results or unwanted side-effects.

The processor implementation can ensure that a fixed number of cycles are required for the NVIC to detect an interrupt signal and the processor fetch the first instruction of the associated interrupt handler. If this is done, the highest priority interrupt is jitter-free. This will depend on where the interrupt handler is located and if another higher priority master is accessing that memory. SRAM4 and SRAM5 are provided that may be allocated to interrupt handlers for each processor so this is jitter-free.

To reduce interrupt latency and jitter, the Cortex-M0+ processor implements both interrupt late-arrival and interrupt tail-chaining mechanisms, as defined by the ARMv6-M architecture. The worst case interrupt latency, for the highest priority active interrupt in a zero wait-state system not using jitter suppression, is 15 cycles.

The processor exception model has the following implementation-defined behaviour in addition to the architecture specified behaviour:

- Exceptions on stacking from HardFault to NMI lockup at NMI priority.
- Exceptions on unstacking from NMI to HardFault lockup at HardFault priority.

2.4.4. System control

2.4.4.1. System control register summary

Table 84 gives the system control registers. Each of these registers is 32 bits wide.

Table 84. M0+ System control registers

Name	Description
SYST_CSR	SysTick Control and Status Register
SYST_RVR	SysTick Reload Value Register
SYST_CVR	SysTick Current Value Register
SYST_CALIB	SysTick Calibration value Register
CPUID	See CPUID Register
ICSR	Interrupt Control State Register
AIRCR	Application Interrupt and Reset Control Register
CCR	Configuration and Control Register
SHPR2	System Handler Priority Register
SHPR3	System Handler Priority Register
SHCSR	System Handler Control and State Register
VTOR	Vector table Offset Register
ACTLR	Auxiliary Control Register

Note

- All system control registers are only accessible using word transfers. Any attempt to read or write a halfword or byte is Unpredictable.
- See the List of Registers or ARMv6-M Architecture Reference Manual for more information about the system control registers, and their addresses and access types, and reset values.

2.4.4.1.1. CPUID Register

The CPUID contains the part number, version, and implementation information that is specific to the processor.

IMPORTANT

This standard internal Arm register contains information about the type of processor. It should not be confused with CPUID (Section 2.3.1.1), an RP2040 SIO register which reads as 0 on core 0 and 1 on core 1.

2.4.5. NVIC

2.4.5.1. About the NVIC

External interrupt signals connect to the Nested Vectored Interrupt Controller (NVIC), and the NVIC prioritizes the interrupts. Software can set the priority of each interrupt. The NVIC and the Cortex-M0+ processor core are closely coupled, providing low latency interrupt processing and efficient processing of late arriving interrupts.

NOTE

"Nested" refers to the fact that interrupts can themselves be interrupted, by higher-priority interrupts. "Vectored" refers to the hardware dispatching each interrupt to a distinct handler routine, specified by the vector table. Details of nesting and vectoring behaviour are given in the ARMv6-M Architecture Reference Manual.

All NVIC registers are only accessible using word transfers. Any attempt to read or write a halfword or byte individually is unpredictable.

NVIC registers are always little-endian.

Processor exception handling is described in Exceptions section.

2.4.5.1.1. SysTick timer

A 24-bit SysTick system timer, extends the functionality of both the processor and the NVIC and provides:

- A 24-bit system timer (SysTick).
- Additional configurable priority SysTick interrupt.

The SysTick timer uses a 1µs pulse as a clock enable. This is generated in the watchdog block as timer_tick. Accuracy of SysTick timing depends upon accuracy of this timer_tick. The SysTick timer can also run from the system clock (see SYST_CALIB).

See the ARMv6-M Architecture Reference Manual for more information.

2.4.5.1.2. Low power modes

The implementation includes a WIC. This enables the processor and NVIC to be put into a very low-power sleep mode leaving the WIC to identify and prioritize interrupts.

The processor fully implements the Wait For Interrupt (WFI), Wait For Event (WFE) and the Send Event (SEV) instructions. In addition, the processor also supports the use of SLEEPONEXIT, that causes the processor core to enter sleep mode when it returns from an exception handler to Thread mode. See the ARMv6-M Architecture Reference Manual for more information.

2.4.5.2. NVIC register summary

Table 85 shows the NVIC registers. Each of these registers is 32 bits wide.

Table 85. M0+ NVIC registers

Name	Description
NVIC_ISER	Interrupt Set-Enable Register.
NVIC_ICER	Interrupt Clear-Enable Register.
NVIC_ISPR	Interrupt Set-Pending Register.
NVIC_ICPR	Interrupt Clear-Pending Register.
NVIC_IPR0 - NVIC_IPR7	Interrupt Priority Registers.

Note

See the List of Registers or ARMv6-M Architecture Reference Manual for more information about the NVIC registers and their addresses, access types, and reset values.

2.4.6. MPU

2.4.6.1. About the MPU

The MPU is a component for memory protection which allows the processor to support the ARMv6 Protected Memory System Architecture model. The MPU provides full support for:

- Eight unified protection regions.
- Overlapping protection regions, with ascending region priority:
  - 7 = highest priority.
  - 0 = lowest priority.
- Access permissions.
- Exporting memory attributes to the system.

MPU mismatches and permission violations invoke the HardFault handler. See the ARMv6-M Architecture Reference Manual for more information.

You can use the MPU to:

- Enforce privilege rules.
- Separate processes.
- Manage memory attributes.

2.4.6.2. MPU register summary

Table 86 shows the MPU registers. Each of these registers is 32 bits wide.

Table 86. M0+ MPU registers

Name	Description
MPU_TYPE	MPU Type Register.
MPU_CTRL	MPU Control Register.
MPU_RNR	MPU Region Number Register.
MPU_RBAR	MPU Region Base Address Register.
MPU_RASR	MPU Region Attribute and Size Register.

Note

- See the ARMv6-M Architecture Reference Manual for more information about the MPU registers and their addresses, access types, and reset values.
- The MPU supports region sizes from 256-bytes to 4Gb, with 8-sub regions per region.

2.4.7. Debug

Basic debug functionality includes processor halt, single-step, processor core register access, Reset and HardFault Vector Catch, unlimited software breakpoints, and full system memory access. See the ARMv6-M Architecture Reference Manual.

The debug features for this device are:

- A breakpoint unit supporting 4 hardware breakpoints.

- A watchpoint unit supporting 2 watchpoints.

2.4.8. List of Registers

The ARM Cortex-M0+ registers start at a base address of `0xe0000000` (defined as PPB_BASE in SDK).

Table 87. List of M0PLUS registers

Offset	Name	Info
0xe010	SYST_CSR	SysTick Control and Status Register
0xe014	SYST_RVR	SysTick Reload Value Register
0xe018	SYST_CVR	SysTick Current Value Register
0xe01c	SYST_CALIB	SysTick Calibration Value Register
0xe100	NVIC_ISER	Interrupt Set-Enable Register
0xe180	NVIC_ICER	Interrupt Clear-Enable Register
0xe200	NVIC_ISPR	Interrupt Set-Pending Register
0xe280	NVIC_ICPR	Interrupt Clear-Pending Register
0xe400	NVIC_IPR0	Interrupt Priority Register 0
0xe404	NVIC_IPR1	Interrupt Priority Register 1
0xe408	NVIC_IPR2	Interrupt Priority Register 2
0xe40c	NVIC_IPR3	Interrupt Priority Register 3
0xe410	NVIC_IPR4	Interrupt Priority Register 4
0xe414	NVIC_IPR5	Interrupt Priority Register 5
0xe418	NVIC_IPR6	Interrupt Priority Register 6
0xe41c	NVIC_IPR7	Interrupt Priority Register 7
0xed00	CPUID	CPUID Base Register
0xed04	ICSR	Interrupt Control and State Register
0xed08	VTOR	Vector Table Offset Register
0xed0c	AIRCR	Application Interrupt and Reset Control Register
0xed10	SCR	System Control Register
0xed14	CCR	Configuration and Control Register
0xed1c	SHPR2	System Handler Priority Register 2
0xed20	SHPR3	System Handler Priority Register 3
0xed24	SHCSR	System Handler Control and State Register
0xed90	MPU_TYPE	MPU Type Register
0xed94	MPU_CTRL	MPU Control Register
0xed98	MPU_RNR	MPU Region Number Register
0xed9c	MPU_RBAR	MPU Region Base Address Register
0xeda0	MPU_RASR	MPU Region Attribute and Size Register

M0PLUS: SYST_CSR Register

Offset: 0xe010

Description

Use the SysTick Control and Status Register to enable the SysTick features.

Table 88. SYST_CSR Register

Bits	Description	Type	Reset
31:17	Reserved.	-	-
16	**COUNTFLAG**: Returns 1 if timer counted to 0 since last time this was read. Clears on read by application or debugger.	RO	0x0
15:3	Reserved.	-	-
2	**CLKSOURCE**: SysTick clock source. Always reads as one if SYST_CALIB reports NOREF. Selects the SysTick timer clock source: 0 = External reference clock. 1 = Processor clock.	RW	0x0
1	**TICKINT**: Enables SysTick exception request: 0 = Counting down to zero does not assert the SysTick exception request. 1 = Counting down to zero to asserts the SysTick exception request.	RW	0x0
0	**ENABLE**: Enable SysTick counter: 0 = Counter disabled. 1 = Counter enabled.	RW	0x0

M0PLUS: SYST_RVR Register

Offset: 0xe014

Description

Use the SysTick Reload Value Register to specify the start value to load into the current value register when the counter reaches 0. It can be any value between 0 and 0x00FFFFFF. A start value of 0 is possible, but has no effect because the SysTick interrupt and COUNTFLAG are activated when counting from 1 to 0. The reset value of this register is UNKNOWN.

To generate a multi-shot timer with a period of N processor clock cycles, use a RELOAD value of N-1. For example, if the SysTick interrupt is required every 100 clock pulses, set RELOAD to 99.

Table 89. SYST_RVR Register

Bits	Description	Type	Reset
31:24	Reserved.	-	-
23:0	**RELOAD**: Value to load into the SysTick Current Value Register when the counter reaches 0.	RW	0x000000

M0PLUS: SYST_CVR Register

Offset: 0xe018

Description

Use the SysTick Current Value Register to find the current value in the register. The reset value of this register is UNKNOWN.

Table 90. SYST_CVR Register

Bits	Description	Type	Reset
31:24	Reserved.	-	-

Bits	Description	Type	Reset
23:0	**CURRENT**: Reads return the current value of the SysTick counter. This register is write-clear. Writing to it with any value clears the register to 0. Clearing this register also clears the COUNTFLAG bit of the SysTick Control and Status Register.	RW	0x000000

M0PLUS: SYST_CALIB Register

Offset: 0xe01c

Description

Use the SysTick Calibration Value Register to enable software to scale to any required speed using divide and multiply.

Table 91. SYST_CALIB Register

Bits	Description	Type	Reset
31	**NOREF**: If reads as 1, the Reference clock is not provided - the CLKSOURCE bit of the SysTick Control and Status register will be forced to 1 and cannot be cleared to 0.	RO	0x0
30	**SKEW**: If reads as 1, the calibration value for 10ms is inexact (due to clock frequency).	RO	0x0
29:24	Reserved.	-	-
23:0	**TENMS**: An optional Reload value to be used for 10ms (100Hz) timing, subject to system clock skew errors. If the value reads as 0, the calibration value is not known.	RO	0x000000

M0PLUS: NVIC_ISER Register

Offset: 0xe100

Description

Use the Interrupt Set-Enable Register to enable interrupts and determine which interrupts are currently enabled.
If a pending interrupt is enabled, the NVIC activates the interrupt based on its priority. If an interrupt is not enabled, asserting its interrupt signal changes the interrupt state to pending, but the NVIC never activates the interrupt, regardless of its priority.

Table 92. NVIC_ISER Register

Bits	Description	Type	Reset
31:0	**SETENA**: Interrupt set-enable bits. Write: 0 = No effect. 1 = Enable interrupt. Read: 0 = Interrupt disabled. 1 = Interrupt enabled.	RW	0x00000000

M0PLUS: NVIC_ICER Register

Offset: 0xe180

Description

Use the Interrupt Clear-Enable Registers to disable interrupts and determine which interrupts are currently enabled.

Table 93. NVIC_ICER Register

Bits	Description	Type	Reset
31:0	**CLRENA**: Interrupt clear-enable bits. Write: 0 = No effect. 1 = Disable interrupt. Read: 0 = Interrupt disabled. 1 = Interrupt enabled.	RW	0x00000000

M0PLUS: NVIC_ISPR Register

Offset: 0xe200

Description

The NVIC_ISPR forces interrupts into the pending state, and shows which interrupts are pending.

Table 94. NVIC_ISPR Register

Bits	Description	Type	Reset
31:0	**SETPEND**: Interrupt set-pending bits. Write: 0 = No effect. 1 = Changes interrupt state to pending. Read: 0 = Interrupt is not pending. 1 = Interrupt is pending. Note: Writing 1 to the NVIC_ISPR bit corresponding to: An interrupt that is pending has no effect. A disabled interrupt sets the state of that interrupt to pending.	RW	0x00000000

M0PLUS: NVIC_ICPR Register

Offset: 0xe280

Description

Use the Interrupt Clear-Pending Register to clear pending interrupts and determine which interrupts are currently pending.

Table 95. NVIC_ICPR Register

Bits	Description	Type	Reset
31:0	**CLRPEND**: Interrupt clear-pending bits. Write: 0 = No effect. 1 = Removes pending state and interrupt. Read: 0 = Interrupt is not pending. 1 = Interrupt is pending.	RW	0x00000000

M0PLUS: NVIC_IPR0 Register

Offset: 0xe400

Description

Use the Interrupt Priority Registers to assign a priority from 0 to 3 to each of the available interrupts. 0 is the highest priority, and 3 is the lowest.

Note: Writing 1 to an NVIC_ICPR bit does not affect the active state of the corresponding interrupt.

These registers are only word-accessible

Table 96. NVIC_IPR0 Register

Bits	Description	Type	Reset
31:30	**IP_3**: Priority of interrupt 3	RW	0x0
29:24	Reserved.	-	-
23:22	**IP_2**: Priority of interrupt 2	RW	0x0
21:16	Reserved.	-	-
15:14	**IP_1**: Priority of interrupt 1	RW	0x0
13:8	Reserved.	-	-
7:6	**IP_0**: Priority of interrupt 0	RW	0x0
5:0	Reserved.	-	-

M0PLUS: NVIC_IPR1 Register

Offset: 0xe404

Description

Use the Interrupt Priority Registers to assign a priority from 0 to 3 to each of the available interrupts. 0 is the highest priority, and 3 is the lowest.

Table 97. NVIC_IPR1 Register

Bits	Description	Type	Reset
31:30	**IP_7**: Priority of interrupt 7	RW	0x0
29:24	Reserved.	-	-
23:22	**IP_6**: Priority of interrupt 6	RW	0x0
21:16	Reserved.	-	-
15:14	**IP_5**: Priority of interrupt 5	RW	0x0
13:8	Reserved.	-	-
7:6	**IP_4**: Priority of interrupt 4	RW	0x0
5:0	Reserved.	-	-

M0PLUS: NVIC_IPR2 Register

Offset: 0xe408

Description

Use the Interrupt Priority Registers to assign a priority from 0 to 3 to each of the available interrupts. 0 is the highest priority, and 3 is the lowest.

Table 98. NVIC_IPR2 Register

Bits	Description	Type	Reset
31:30	**IP_11**: Priority of interrupt 11	RW	0x0
29:24	Reserved.	-	-
23:22	**IP_10**: Priority of interrupt 10	RW	0x0
21:16	Reserved.	-	-
15:14	**IP_9**: Priority of interrupt 9	RW	0x0
13:8	Reserved.	-	-

Bits	Description	Type	Reset
7:6	**IP_8**: Priority of interrupt 8	RW	0x0
5:0	Reserved.	-	-

M0PLUS: NVIC_IPR3 Register

Offset: 0xe40c

Description

Use the Interrupt Priority Registers to assign a priority from 0 to 3 to each of the available interrupts. 0 is the highest priority, and 3 is the lowest.

Table 99. NVIC_IPR3 Register

Bits	Description	Type	Reset
31:30	**IP_15**: Priority of interrupt 15	RW	0x0
29:24	Reserved.	-	-
23:22	**IP_14**: Priority of interrupt 14	RW	0x0
21:16	Reserved.	-	-
15:14	**IP_13**: Priority of interrupt 13	RW	0x0
13:8	Reserved.	-	-
7:6	**IP_12**: Priority of interrupt 12	RW	0x0
5:0	Reserved.	-	-

M0PLUS: NVIC_IPR4 Register

Offset: 0xe410

Description

Use the Interrupt Priority Registers to assign a priority from 0 to 3 to each of the available interrupts. 0 is the highest priority, and 3 is the lowest.

Table 100. NVIC_IPR4 Register

Bits	Description	Type	Reset
31:30	**IP_19**: Priority of interrupt 19	RW	0x0
29:24	Reserved.	-	-
23:22	**IP_18**: Priority of interrupt 18	RW	0x0
21:16	Reserved.	-	-
15:14	**IP_17**: Priority of interrupt 17	RW	0x0
13:8	Reserved.	-	-
7:6	**IP_16**: Priority of interrupt 16	RW	0x0
5:0	Reserved.	-	-

M0PLUS: NVIC_IPR5 Register

Offset: 0xe414

Description

Use the Interrupt Priority Registers to assign a priority from 0 to 3 to each of the available interrupts. 0 is the highest priority, and 3 is the lowest.

Table 101. NVIC_IPR5 Register

Bits	Description	Type	Reset
31:30	**IP_23**: Priority of interrupt 23	RW	0x0
29:24	Reserved.	-	-
23:22	**IP_22**: Priority of interrupt 22	RW	0x0
21:16	Reserved.	-	-
15:14	**IP_21**: Priority of interrupt 21	RW	0x0
13:8	Reserved.	-	-
7:6	**IP_20**: Priority of interrupt 20	RW	0x0
5:0	Reserved.	-	-

M0PLUS: NVIC_IPR6 Register

Offset: 0xe418

Description

Use the Interrupt Priority Registers to assign a priority from 0 to 3 to each of the available interrupts. 0 is the highest priority, and 3 is the lowest.

Table 102. NVIC_IPR6 Register

Bits	Description	Type	Reset
31:30	**IP_27**: Priority of interrupt 27	RW	0x0
29:24	Reserved.	-	-
23:22	**IP_26**: Priority of interrupt 26	RW	0x0
21:16	Reserved.	-	-
15:14	**IP_25**: Priority of interrupt 25	RW	0x0
13:8	Reserved.	-	-
7:6	**IP_24**: Priority of interrupt 24	RW	0x0
5:0	Reserved.	-	-

M0PLUS: NVIC_IPR7 Register

Offset: 0xe41c

Description

Use the Interrupt Priority Registers to assign a priority from 0 to 3 to each of the available interrupts. 0 is the highest priority, and 3 is the lowest.

Table 103. NVIC_IPR7 Register

Bits	Description	Type	Reset
31:30	**IP_31**: Priority of interrupt 31	RW	0x0
29:24	Reserved.	-	-
23:22	**IP_30**: Priority of interrupt 30	RW	0x0
21:16	Reserved.	-	-

Bits	Description	Type	Reset
15:14	**IP_29**: Priority of interrupt 29	RW	0x0
13:8	Reserved.	-	-
7:6	**IP_28**: Priority of interrupt 28	RW	0x0
5:0	Reserved.	-	-

M0PLUS: CPUID Register

Offset: 0xed00

Description

Read the CPU ID Base Register to determine: the ID number of the processor core, the version number of the processor core, the implementation details of the processor core.

Table 104. CPUID Register

Bits	Description	Type	Reset
31:24	**IMPLEMENTER**: Implementor code: 0x41 = ARM	RO	0x41
23:20	**VARIANT**: Major revision number n in the rnpm revision status: 0x0 = Revision 0.	RO	0x0
19:16	**ARCHITECTURE**: Constant that defines the architecture of the processor: 0xC = ARMv6-M architecture.	RO	0xc
15:4	**PARTNO**: Number of processor within family: 0xC60 = Cortex-M0+	RO	0xc60
3:0	**REVISION**: Minor revision number m in the rnpm revision status: 0x1 = Patch 1.	RO	0x1

M0PLUS: ICSR Register

Offset: 0xed04

Description

Use the Interrupt Control State Register to set a pending Non-Maskable Interrupt (NMI), set or clear a pending PendSV, set or clear a pending SysTick, check for pending exceptions, check the vector number of the highest priority pended exception, check the vector number of the active exception.

Table 105. ICSR Register

Bits	Description	Type	Reset
31	**NMIPENDSET**: Setting this bit will activate an NMI. Since NMI is the highest priority exception, it will activate as soon as it is registered. NMI set-pending bit. Write: 0 = No effect. 1 = Changes NMI exception state to pending. Read: 0 = NMI exception is not pending. 1 = NMI exception is pending. Because NMI is the highest-priority exception, normally the processor enters the NMI exception handler as soon as it detects a write of 1 to this bit. Entering the handler then clears this bit to 0. This means a read of this bit by the NMI exception handler returns 1 only if the NMI signal is reasserted while the processor is executing that handler.	RW	0x0

Bits	Description	Type	Reset
30:29	Reserved.	-	-
28	**PENDSVSET**: PendSV set-pending bit. Write: 0 = No effect. 1 = Changes PendSV exception state to pending. Read: 0 = PendSV exception is not pending. 1 = PendSV exception is pending. Writing 1 to this bit is the only way to set the PendSV exception state to pending.	RW	0x0
27	**PENDSVCLR**: PendSV clear-pending bit. Write: 0 = No effect. 1 = Removes the pending state from the PendSV exception.	RW	0x0
26	**PENDSTSET**: SysTick exception set-pending bit. Write: 0 = No effect. 1 = Changes SysTick exception state to pending. Read: 0 = SysTick exception is not pending. 1 = SysTick exception is pending.	RW	0x0
25	**PENDSTCLR**: SysTick exception clear-pending bit. Write: 0 = No effect. 1 = Removes the pending state from the SysTick exception. This bit is WO. On a register read its value is Unknown.	RW	0x0
24	Reserved.	-	-
23	**ISRPREEMPT**: The system can only access this bit when the core is halted. It indicates that a pending interrupt is to be taken in the next running cycle. If C_MASKINTS is clear in the Debug Halting Control and Status Register, the interrupt is serviced.	RO	0x0
22	**ISRPENDING**: External interrupt pending flag	RO	0x0
21	Reserved.	-	-
20:12	**VECTPENDING**: Indicates the exception number for the highest priority pending exception: 0 = no pending exceptions. Non zero = The pending state includes the effect of memory-mapped enable and mask registers. It does not include the PRIMASK special-purpose register qualifier.	RO	0x000
11:9	Reserved.	-	-
8:0	**VECTACTIVE**: Active exception number field. Reset clears the VECTACTIVE field.	RO	0x000

M0PLUS: VTOR Register

Offset: 0xed08

Description

The VTOR holds the vector table offset address.

Table 106. VTOR Register

Bits	Description	Type	Reset
31:8	**TBLOFF**: Bits [31:8] of the indicate the vector table offset address.	RW	0x000000
7:0	Reserved.	-	-

M0PLUS: AIRCR Register

Offset: 0xed0c

Description

Use the Application Interrupt and Reset Control Register to: determine data endianness, clear all active state information from debug halt mode, request a system reset.

Table 107. AIRCR Register

Bits	Description	Type	Reset
31:16	**VECTKEY**: Register key: Reads as Unknown On writes, write 0x05FA to VECTKEY, otherwise the write is ignored.	RW	0x0000
15	**ENDIANESS**: Data endianness implemented: 0 = Little-endian.	RO	0x0
14:3	Reserved.	-	-
2	**SYSRESETREQ**: Writing 1 to this bit causes the SYSRESETREQ signal to the outer system to be asserted to request a reset. The intention is to force a large system reset of all major components except for debug. The C_HALT bit in the DHCSR is cleared as a result of the system reset requested. The debugger does not lose contact with the device.	RW	0x0
1	**VECTCLRACTIVE**: Clears all active state information for fixed and configurable exceptions. This bit: is self-clearing, can only be set by the DAP when the core is halted. When set: clears all active exception status of the processor, forces a return to Thread mode, forces an IPSR of 0. A debugger must re-initialize the stack.	RW	0x0
0	Reserved.	-	-

M0PLUS: SCR Register

Offset: 0xed10

Description

System Control Register. Use the System Control Register for power-management functions: signal to the system when the processor can enter a low power state, control how the processor enters and exits low power states.

Table 108. SCR Register

Bits	Description	Type	Reset
31:5	Reserved.	-	-

Bits	Description	Type	Reset
4	**SEVONPEND**: Send Event on Pending bit: 0 = Only enabled interrupts or events can wakeup the processor, disabled interrupts are excluded. 1 = Enabled events and all interrupts, including disabled interrupts, can wakeup the processor. When an event or interrupt becomes pending, the event signal wakes up the processor from WFE. If the processor is not waiting for an event, the event is registered and affects the next WFE. The processor also wakes up on execution of an SEV instruction or an external event.	RW	0x0
3	Reserved.	-	-
2	**SLEEPDEEP**: Controls whether the processor uses sleep or deep sleep as its low power mode: 0 = Sleep. 1 = Deep sleep.	RW	0x0
1	**SLEEPONEXIT**: Indicates sleep-on-exit when returning from Handler mode to Thread mode: 0 = Do not sleep when returning to Thread mode. 1 = Enter sleep, or deep sleep, on return from an ISR to Thread mode. Setting this bit to 1 enables an interrupt driven application to avoid returning to an empty main application.	RW	0x0
0	Reserved.	-	-

M0PLUS: CCR Register

Offset: 0xed14

Description

The Configuration and Control Register permanently enables stack alignment and causes unaligned accesses to result in a Hard Fault.

Table 109. CCR Register

Bits	Description	Type	Reset
31:10	Reserved.	-	-
9	**STKALIGN**: Always reads as one, indicates 8-byte stack alignment on exception entry. On exception entry, the processor uses bit[9] of the stacked PSR to indicate the stack alignment. On return from the exception it uses this stacked bit to restore the correct stack alignment.	RO	0x0
8:4	Reserved.	-	-
3	**UNALIGN_TRP**: Always reads as one, indicates that all unaligned accesses generate a HardFault.	RO	0x0
2:0	Reserved.	-	-

M0PLUS: SHPR2 Register

Offset: 0xed1c

Description

System handlers are a special class of exception handler that can have their priority set to any of the priority levels.

Use the System Handler Priority Register 2 to set the priority of SVCall.

Table 110. SHPR2 Register

Bits	Description	Type	Reset
31:30	**PRI_11**: Priority of system handler 11, SVCall	RW	0x0
29:0	Reserved.	-	-

M0PLUS: SHPR3 Register

Offset: 0xed20

Description

System handlers are a special class of exception handler that can have their priority set to any of the priority levels. Use the System Handler Priority Register 3 to set the priority of PendSV and SysTick.

Table 111. SHPR3 Register

Bits	Description	Type	Reset
31:30	**PRI_15**: Priority of system handler 15, SysTick	RW	0x0
29:24	Reserved.	-	-
23:22	**PRI_14**: Priority of system handler 14, PendSV	RW	0x0
21:0	Reserved.	-	-

M0PLUS: SHCSR Register

Offset: 0xed24

Description

Use the System Handler Control and State Register to determine or clear the pending status of SVCall.

Table 112. SHCSR Register

Bits	Description	Type	Reset
31:16	Reserved.	-	-
15	**SVCALLPENDED**: Reads as 1 if SVCall is Pending. Write 1 to set pending SVCall, write 0 to clear pending SVCall.	RW	0x0
14:0	Reserved.	-	-

M0PLUS: MPU_TYPE Register

Offset: 0xed90

Description

Read the MPU Type Register to determine if the processor implements an MPU, and how many regions the MPU supports.

Table 113. MPU_TYPE Register

Bits	Description	Type	Reset
31:24	Reserved.	-	-
23:16	**IREGION**: Instruction region. Reads as zero as ARMv6-M only supports a unified MPU.	RO	0x00
15:8	**DREGION**: Number of regions supported by the MPU.	RO	0x08
7:1	Reserved.	-	-

Bits	Description	Type	Reset
0	**SEPARATE**: Indicates support for separate instruction and data address maps. Reads as 0 as ARMv6-M only supports a unified MPU.	RO	0x0

M0PLUS: MPU_CTRL Register

Offset: 0xed94

Description

Use the MPU Control Register to enable and disable the MPU, and to control whether the default memory map is enabled as a background region for privileged accesses, and whether the MPU is enabled for HardFaults and NMIs.

Table 114. MPU_CTRL Register

Bits	Description	Type	Reset
31:3	Reserved.	-	-
2	**PRIVDEFENA**: Controls whether the default memory map is enabled as a background region for privileged accesses. This bit is ignored when ENABLE is clear. 0 = If the MPU is enabled, disables use of the default memory map. Any memory access to a location not covered by any enabled region causes a fault. 1 = If the MPU is enabled, enables use of the default memory map as a background region for privileged software accesses. When enabled, the background region acts as if it is region number -1. Any region that is defined and enabled has priority over this default map.	RW	0x0
1	**HFNMIENA**: Controls the use of the MPU for HardFaults and NMIs. Setting this bit when ENABLE is clear results in UNPREDICTABLE behaviour. When the MPU is enabled: 0 = MPU is disabled during HardFault and NMI handlers, regardless of the value of the ENABLE bit. 1 = the MPU is enabled during HardFault and NMI handlers.	RW	0x0
0	**ENABLE**: Enables the MPU. If the MPU is disabled, privileged and unprivileged accesses use the default memory map. 0 = MPU disabled. 1 = MPU enabled.	RW	0x0

M0PLUS: MPU_RNR Register

Offset: 0xed98

Description

Use the MPU Region Number Register to select the region currently accessed by MPU_RBAR and MPU_RASR.

Table 115. MPU_RNR Register

Bits	Description	Type	Reset
31:4	Reserved.	-	-
3:0	**REGION**: Indicates the MPU region referenced by the MPU_RBAR and MPU_RASR registers. The MPU supports 8 memory regions, so the permitted values of this field are 0-7.	RW	0x0

M0PLUS: MPU_RBAR Register

Offset: 0xed9c

Description

Read the MPU Region Base Address Register to determine the base address of the region identified by MPU_RNR. Write to update the base address of said region or that of a specified region, with whose number MPU_RNR will also be updated.

Table 116. MPU_RBAR Register

Bits	Description	Type	Reset
31:8	**ADDR**: Base address of the region.	RW	0x000000
7:5	Reserved.	-	-
4	**VALID**: On writes, indicates whether the write must update the base address of the region identified by the REGION field, updating the MPU_RNR to indicate this new region. Write: 0 = MPU_RNR not changed, and the processor: Updates the base address for the region specified in the MPU_RNR. Ignores the value of the REGION field. 1 = The processor: Updates the value of the MPU_RNR to the value of the REGION field. Updates the base address for the region specified in the REGION field. Always reads as zero.	RW	0x0
3:0	**REGION**: On writes, specifies the number of the region whose base address to update provided VALID is set written as 1. On reads, returns bits [3:0] of MPU_RNR.	RW	0x0

M0PLUS: MPU_RASR Register

Offset: 0xeda0

Description

Use the MPU Region Attribute and Size Register to define the size, access behaviour and memory type of the region identified by MPU_RNR, and enable that region.

Table 117. MPU_RASR Register

Bits	Description	Type	Reset
31:16	**ATTRS**: The MPU Region Attribute field. Use to define the region attribute control. 28 = XN: Instruction access disable bit: 0 = Instruction fetches enabled. 1 = Instruction fetches disabled. 26:24 = AP: Access permission field 18 = S: Shareable bit 17 = C: Cacheable bit 16 = B: Bufferable bit	RW	0x0000
15:8	**SRD**: Subregion Disable. For regions of 256 bytes or larger, each bit of this field controls whether one of the eight equal subregions is enabled.	RW	0x00
7:6	Reserved.	-	-
5:1	**SIZE**: Indicates the region size. Region size in bytes = 2^(SIZE+1). The minimum permitted value is 7 (b00111) = 256Bytes	RW	0x00
0	**ENABLE**: Enables the region.	RW	0x0

2.5. DMA

The RP2040 Direct Memory Access (DMA) controller has separate read and write master connections to the bus fabric, and performs bulk data transfers on a processor's behalf. This leaves processors free to attend to other tasks, or enter low-power sleep states. The data throughput of the DMA is also significantly higher than one of RP2040's processors.

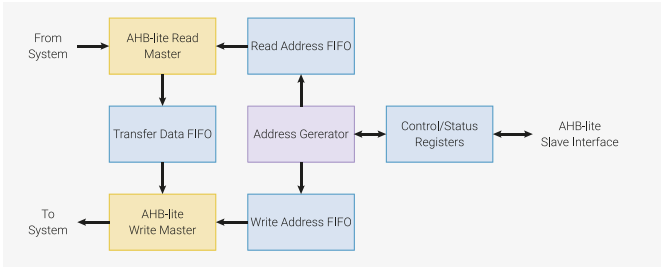

Figure 12. DMA Architecture Overview. The read master can read data from some address every clock cycle. Likewise, the write master can write to another address. The address generator produces matched pairs of read and write addresses, which the masters consume through the address FIFOs. Up to 12 transfer sequences may be in progress simultaneously, supervised by software via the control and status registers.

The DMA can perform one read access and one write access, up to 32 bits in size, every clock cycle. There are 12 independent channels, each which supervise a sequence of bus transfers, usually in one of the following scenarios:

- *Memory-to-peripheral*: a peripheral signals the DMA when it needs more data to transmit. The DMA reads data from an array in RAM or flash, and writes to the peripheral's data FIFO.
- *Peripheral-to-memory*: a peripheral signals the DMA when it has received data. The DMA reads this data from the peripheral's data FIFO, and writes it to an array in RAM.
- *Memory-to-memory*: the DMA transfers data between two buffers in RAM, as fast as possible.

Each channel has its own control and status registers (CSRs), with which software can program and monitor the channel's progress. When multiple channels are active at the same time, the DMA shares bandwidth evenly between the channels, with round-robin over all channels which are currently requesting data transfers.

The transfer size can be either 32, 16, or 8 bits. This is configured once per channel: source transfer size and destination transfer size are the same. The DMA performs standard byte lane replication on narrow writes, so byte data is available in all 4 bytes of the databus, and halfword data in both halfwords.

Channels can be combined in varied ways for more sophisticated behaviour and greater autonomy. For example, one channel can configure another, loading configuration data from a sequence of control blocks in memory, and the second can then call back to the first via the `CHAIN_TO` option, when it needs to be reconfigured.

Making the DMA more autonomous means that much less processor supervision is required: overall this allows the system to do more at once, or to dissipate less power.

2.5.1. Configuring Channels

Each channel has four control/status registers:

- `READ_ADDR` is a pointer to the next address to be read from
- `WRITE_ADDR` is a pointer to the next address to be written to
- `TRANS_COUNT` shows the number of transfers remaining in the current transfer sequence, and is used to program the number of transfers in the next transfer sequence (see Section 2.5.1.2).
- `CTRL` is used to configure all other aspects of the channel's behaviour, to enable/disable it, and to check for completion.

These are live registers: they update continuously as the channel progresses.

2.5.1.1. Read and Write Addresses

READ_ADDR and WRITE_ADDR contain the address the channel will next read from, and write to, respectively. These registers update automatically after each read/write access. They increment by 1, 2 or 4 bytes at a time, depending on the transfer size configured in CTRL.

Software should generally program these registers with new start addresses each time a new transfer sequence starts. If READ_ADDR and WRITE_ADDR are not reprogrammed, the DMA will use the current values as start addresses for the next transfer. For example:

- If the address does not increment (e.g. it is the address of a peripheral FIFO), and the next transfer sequence is to/from that *same* address, there is no need to write to the register again.
- When transferring to/from a consecutive series of buffers in memory (e.g. scattering and gathering), an address register will already have incremented to the start of the next buffer at the completion of a transfer.

By not programming all four CSRs for each transfer sequence, software can use shorter interrupt handlers, and more compact control block formats when used with channel chaining (see register aliases in Section 2.5.2.1, chaining in Section 2.5.2.2).

CAUTION

READ_ADDR and WRITE_ADDR must always be aligned to the current transfer size, as specified in CTRL.DATA_SIZE. It is up to software to ensure the initial values are correctly aligned.

2.5.1.2. Transfer Count

Reading from TRANS_COUNT yields the number of transfers remaining in the current transfer sequence. This value updates continuously as the channel progresses. Writing to TRANS_COUNT sets the length of the *next* transfer sequence. Up to $2^{32}-1$ transfers can be performed in one sequence.

Each time the channel starts a new transfer sequence, the most recent value written to TRANS_COUNT is copied to the live transfer counter, which will then start to decrement again as the new transfer sequence makes progress. For debugging purposes, the last value written can be read from the DBG_TCR (TRANS_COUNT reload value) register.

If the channel is triggered multiple times without intervening writes to TRANS_COUNT, it performs the same number of transfers each time. For example, when chained to, one channel might load a fixed-size control block into another channel's CSRs. TRANS_COUNT would be programmed once by software, and then reload automatically every time.

Alternatively, TRANS_COUNT can be written with a new value before starting each transfer sequence. If TRANS_COUNT is the channel trigger (see Section 2.5.2.1), the channel will start immediately, and the value just written will be used, *not* the value currently in the reload register.

NOTE

The TRANS_COUNT is the number of *transfers* to be performed. The total number of bytes transferred is TRANS_COUNT times the size of each transfer in bytes, given by CTRL.DATA_SIZE.

2.5.1.3. Control/Status

The CTRL register has more, smaller fields than the other 3 registers, and full details of these are given in the CTRL register listings. Among other things, CTRL is used to:

- Configure the size of this channel's data transfers, via CTRL.DATA_SIZE. Reads and writes are the same size.
- Configure if and how READ_ADDR and WRITE_ADDR increment after each read or write, via CTRL.INCR_WRITE, CTRL.INCR_READ, CTRL.RING_SEL, CTRL.RING_SIZE. Ring transfers are available, where one of the address pointers wraps at some power-of-2 boundary.

- Select another channel (or none) to be triggered when this channel completes, via CTRL.CHAIN_TO.
- Select a peripheral data request (DREQ) signal to pace this channel's transfers, via CTRL.TREQ_SEL.
- See when the channel is idle, via CTRL.BUSY.
- See if the channel has encountered a bus error, e.g. due to a faulty address being accessed, via CTRL.AHB_ERROR, CTRL.READ_ERROR, or CTRL.WRITE_ERROR.

2.5.2. Starting Channels

There are three ways to start a channel:

- Writing to a channel trigger register
- A chain trigger from another channel which has just completed, and has its CHAIN_TO field configured
- The MULTI_CHAN_TRIGGER register, which can start multiple channels at once

Each of these covers different use cases. For example, trigger registers are simple and efficient when configuring and starting a channel in an interrupt service routine, and CHAIN_TO allows one channel to callback to another channel, which can then reconfigure the first channel.

NOTE

Triggering a channel which is already running has no effect.

2.5.2.1. Aliases and Triggers

Table 118. Control register aliases. Each channel has four control/status registers. Each register can be accessed at multiple different addresses. In each naturally-aligned group of four, all four registers appear, in different orders.

Offset	**+0x0**	**+0x4**	**+0x8**	**+0xC** (Trigger)
0x00 (Alias 0)	READ_ADDR	WRITE_ADDR	TRANS_COUNT	CTRL_TRIG
0x10 (Alias 1)	CTRL	READ_ADDR	WRITE_ADDR	TRANS_COUNT_TRIG
0x20 (Alias 2)	CTRL	TRANS_COUNT	READ_ADDR	WRITE_ADDR_TRIG
0x30 (Alias 3)	CTRL	WRITE_ADDR	TRANS_COUNT	READ_ADD_TRIG

The four CSRs are aliased multiple times in memory. Each alias — of which there are four — exposes the same four physical registers, but in a different order. The final register in each alias (at offset +0xC, highlighted) is a trigger register. Writing to the trigger register starts the channel.

Often, only alias 0 is used, and aliases 1-3 can be ignored. The channel is configured *and* started by writing READ_ADDR, WRITE_ADDR, TRANS_COUNT and finally CTRL. Since CTRL is the trigger register in alias 0, this starts the channel.

The other aliases allow more compact control block lists when using one channel to configure another, and more efficient reconfiguration and launch in interrupt handlers:

- Each CSR is a trigger register in one of the aliases:
  - When gathering fixed-size buffers into a peripheral, the DMA channel can be configured and launched by writing only READ_ADDR_TRIG.
  - When scattering from a peripheral to fixed-size buffers, the channel can be configured and launched by writing only WRITE_ADDR_TRIG.
- Useful combinations of registers appear as naturally-aligned tuples which contain a trigger register. In conjunction with channel chaining and address wrapping, these implement compressed control block formats, e.g.:
  - (WRITE_ADDR, TRANS_COUNT_TRIG) for peripheral scatter operations

- (TRANS_COUNT, READ_ADDR_TRIG) for peripheral gather operations, or calculating CRCs on a list of buffers
- (READ_ADDR, WRITE_ADDR_TRIG) for manipulating fixed-size buffers in memory

Trigger registers do not start the channel if:

- The channel is disabled via CTRL.EN. (If the trigger is CTRL, the just-written value of EN is used, *not* the value currently in the CTRL register.)
- The channel is already running
- The value 0 is written to the trigger register. (This is useful for ending control block chains. See null triggers, Section 2.5.2.3)

2.5.2.2. Chaining

When a channel completes, it can name a different channel to immediately be triggered. This can be used as a callback for the second channel to reconfigure and restart the first.

This feature is configured through the CHAIN_TO field in the channel CTRL register. This 4-bit value selects a channel that will start when this one finishes. A channel can not chain to itself. Setting CHAIN_TO to a channel's own index means no chaining will take place.

Chain triggers behave the same as triggers from other sources, such as trigger registers. For example, they cause TRANS_COUNT to reload, and they are ignored if the targeted channel is already running.

One application for CHAIN_TO is for a channel to request reconfiguration by another channel, from a sequence of control blocks in memory. Channel A is configured to perform a wrapped transfer from memory to channel B's control registers (including a trigger register), and channel B is configured to chain back to channel A when it completes each transfer sequence. This is shown more explicitly in the DMA control blocks example (Section 2.5.6.2).

Use of the register aliases (Section 2.5.2.1) enables compact formats for DMA control blocks: as little as one word in some cases.

Another use of chaining is a "ping-pong" configuration, where two channels each trigger one another. The processor can respond to the channel completion interrupts, and reconfigure each channel after it completes; however, the chained channel, which has already been configured, starts immediately. In other words, channel configuration and channel operation are pipelined. Performance can improve dramatically where many short transfer sequences are required.

The Section 2.5.6 goes into more detail on the possibilities of chain triggers, in the real world.

2.5.2.3. Null Triggers and Chain Interrupts

As mentioned in Section 2.5.2.1, writing all-zeroes to a trigger register does *not* start the channel. This is called a null trigger, and it has two purposes:

- Cause a halt at the end of an array of control blocks, by appending an all-zeroes block
- Reduce the number of interrupts generated when control blocks are used

By default, a channel will generate an interrupt each time it finishes a transfer sequence, unless that channel's IRQ is masked in INTE0 or INTE1. The rate of interrupts can be excessive, particularly as processor attention is generally not required while a sequence of control blocks are in progress; however, processor attention *is* required at the end of a chain.

The channel CTRL register has a field called IRQ_QUIET. Its default value is 0. When this set to 1, channels generate an interrupt when they receive a null trigger, and at no other time. The interrupt is generated by the channel which receives the trigger.

2.5.3. Data Request (DREQ)

Peripherals produce or consume data at their own pace. If the DMA simply transferred data as fast as possible, loss or corruption of data would ensue. DREQs are a communication channel between peripherals and the DMA, which enables the DMA to pace transfers according to the needs of the peripheral.

The CTRL.TREQ_SEL (transfer request) field selects an external DREQ. It can also be used to select one of the internal pacing timers, or select no TREQ at all (the transfer proceeds as fast as possible), e.g. for memory-to-memory transfers.

2.5.3.1. System DREQ Table

There is a global assignment of DREQ numbers to peripheral DREQ channels.

Table 119. DREQs

DREQ	DREQ Channel	DREQ	DREQ Channel	DREQ	DREQ Channel	DREQ	DREQ Channel
0	DREQ_PIO0_TX0	10	DREQ_PIO1_TX2	20	DREQ_UART0_TX	30	DREQ_PWM_WRAP6
1	DREQ_PIO0_TX1	11	DREQ_PIO1_TX3	21	DREQ_UART0_RX	31	DREQ_PWM_WRAP7
2	DREQ_PIO0_TX2	12	DREQ_PIO1_RX0	22	DREQ_UART1_TX	32	DREQ_I2C0_TX
3	DREQ_PIO0_TX3	13	DREQ_PIO1_RX1	23	DREQ_UART1_RX	33	DREQ_I2C0_RX
4	DREQ_PIO0_RX0	14	DREQ_PIO1_RX2	24	DREQ_PWM_WRAP0	34	DREQ_I2C1_TX
5	DREQ_PIO0_RX1	15	DREQ_PIO1_RX3	25	DREQ_PWM_WRAP1	35	DREQ_I2C1_RX
6	DREQ_PIO0_RX2	16	DREQ_SPI0_TX	26	DREQ_PWM_WRAP2	36	DREQ_ADC
7	DREQ_PIO0_RX3	17	DREQ_SPI0_RX	27	DREQ_PWM_WRAP3	37	DREQ_XIP_STREAM
8	DREQ_PIO1_TX0	18	DREQ_SPI1_TX	28	DREQ_PWM_WRAP4	38	DREQ_XIP_SSITX
9	DREQ_PIO1_TX1	19	DREQ_SPI1_RX	29	DREQ_PWM_WRAP5	39	DREQ_XIP_SSIRX

2.5.3.2. Credit-based DREQ Scheme

The RP2040 DMA is designed for systems where:

- The area and power cost of large peripheral data FIFOs is prohibitive
- The bandwidth demands of individual peripherals may be high, e.g. >50% bus injection rate for short periods
- Bus latency is low, but multiple masters may be competing for bus access

In addition, the DMA's transfer FIFOs and dual-master structure permit multiple accesses to the same peripheral to be in flight at once, to improve gross throughput. Choice of DREQ mechanism is therefore critical:

- The traditional "turn on the tap" method can cause overflow if multiple writes are backed up in the TDF. Some systems solve this by overprovisioning peripheral FIFOs and setting the DREQ threshold below the full level, but this wastes precious area and power
- The ARM-style single and burst handshake does not permit additional requests to be registered while the current request is being served. This limits performance when FIFOs are very shallow.

The RP2040 DMA uses a credit-based DREQ mechanism. For each peripheral, the DMA attempts to keep as many transfers in flight as the peripheral has capacity for. This enables full bus throughput (1 word per clock) through an 8-deep peripheral FIFO with no possibility of overflow or underflow, in the absence of fabric latency or contention.

For each channel, the DMA maintains a counter. Each 1-clock pulse on the dreq signal will increment this counter (saturating). When nonzero, the channel requests a transfer from the DMA's internal arbiter, and the counter is decremented when the transfer is issued to the address FIFOs. At this point the transfer is in flight, but has not yet necessarily completed.

Figure 13. DREQ counting

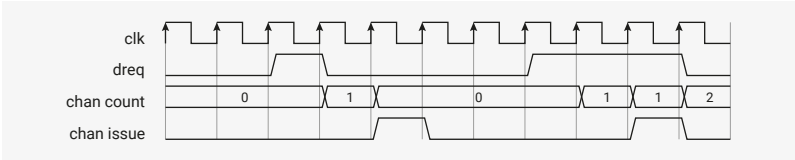

The effect is to upper bound the number of in-flight transfers based on the amount of room or data available in the peripheral FIFO. In the steady state, this gives maximum throughput, but can't underflow or underflow.

One caveat is that the user *must not* access a FIFO which is currently being serviced by the DMA. This causes the channel and peripheral to become desynchronised, and can cause corruption or loss of data.

Another caveat is that multiple channels should not be connected to the same DREQ.

2.5.4. Interrupts

Each channel can generate interrupts; these can be masked on a per-channel basis using the `INTE0` or `INTE1` registers. There are two circumstances where a channel raises an interrupt request:

- On the completion of each transfer sequence, if `CTRL.IRQ_QUIET` is disabled
- On receiving a null trigger, if `CTRL.IRQ_QUIET` is enabled

The masked interrupt status is visible in the INTS registers; there is one bit for each channel. Interrupts are cleared by writing a bit mask to INTS. One idiom for acknowledging interrupts is to read INTS and then write the same value back, so only enabled interrupts are cleared.

The RP2040 DMA provides two system IRQs, with independent masking and status registers (e.g. `INTE0`, `INTE1`). Any combination of channel interrupt requests can be routed to either system IRQ. For example:

- Some channels can be given a higher priority in the system interrupt controller, if they have particularly tight timing requirements
- In multiprocessor systems, different channel interrupts can be routed independently to different cores

For debugging purposes, the INTF registers can force either IRQ to be asserted.

2.5.5. Additional Features

2.5.5.1. Pacing Timers

These allow transfer of data roughly once every *n* `clk_sys` clocks instead of using external peripheral DREQ to trigger transfers. A fractional (X/Y) divider is used, and will generate a maximum of 1 request per `clk_sys` cycle.

There are 4 timers available in RP2040. Each DMA is able to select any of these in `CTRL.TREQ_SEL`.

2.5.5.2. CRC Calculation

The DMA can watch data from a given channel passing through the data FIFO, and calculate checksums based on this data. This a purely passive affair: the data is not altered by this hardware, only observed.

The feature is controlled via the `SNIFF_CTRL` and `SNIFF_DATA` registers, and can be enabled/disabled per DMA transfer via the `CTRL.SNIFF_EN` field.

As this hardware cannot place backpressure on the FIFO, it must keep up with the DMA's maximum transfer rate of 32 bits per clock.

The supported checksums are:

- CRC-32, MSB-first and LSB-first
- CRC-16-CCITT, MSB-first and LSB-first
- Simple summation (add to 32-bit accumulator)
- Even parity

The result register is both readable and writable, so that the initial seed value can be set.

Bit/byte manipulations are available on the result which may aid specific use cases:

- Bit inversion
- Bit reversal
- Byte swap

These manipulations do not affect the CRC calculation, just how the data is presented in the result register.

2.5.5.3. Channel Abort

It is possible for a channel to get into an irrecoverable state: e.g. if commanded to transfer more data than a peripheral will ever request, it will never complete. Clearing the `CTRL.EN` bit merely pauses the channel, and does not solve the problem. This should not occur under normal circumstances, but it is important that there is a mechanism to recover without simply hard-resetting the entire DMA block.

The CHAN_ABORT register forces channels to complete early. There is one bit for each channel, and writing a 1 terminates that channel. This clears the transfer counter and forces the channel into an inactive state.

CAUTION

Due to RP2040-E13, aborting a DMA channel that is making progress (i.e. not stalled on an inactive DREQ) may cause a completion IRQ to assert. The channel interrupt enable should be cleared before performing the abort, and the interrupt should be checked and cleared after the abort.

At the time an abort is triggered, a channel may have bus transfers currently in flight between the read and write master, and these transfers cannot be revoked. The `CTRL.BUSY` flag stays high until these transfers complete, and the channel reaches a safe state, which generally takes only a few cycles. The channel must not be restarted until its `CTRL.BUSY` flag deasserts. Starting a new sequence of transfers whilst transfers from an old sequence are still in flight can lead to unpredictable behaviour.

2.5.5.4. Debug

Debug registers are available for each DMA channel to show the dreq counter `DBG_CTDREQ` and next transfer count `DBG_TCR`. These can also be used to reset a DMA channel if required.

2.5.6. Example Use Cases

2.5.6.1. Using Interrupts to Reconfigure a Channel

When a channel finishes a block of transfers, it becomes available for making more transfers. Software detects that the channel is no longer busy, and reconfigures and restarts the channel. One approach is to poll the `CTRL_BUSY` bit until the channel is done, but this loses one of the key advantages of the DMA, namely that it does *not* have to operate in lockstep with a processor. By setting the correct bit in `INTE0` or `INTE1`, we can instruct the DMA to raise one of its two interrupt request lines when a given channel completes. Rather than repeatedly asking if a channel is done, we are told.

NOTE

Having two system interrupt lines allows different channel completion interrupts to be routed to different cores, or to preempt one another on the same core if one channel is more time-critical.

When the interrupt is asserted, the processor can be configured to drop whatever it is doing and call a user-specified handler function. The handler can reconfigure and restart the channel. When the handler exits, the processor returns to the interrupted code running in the foreground.

Pico Examples: https://github.com/raspberrypi/pico-examples/blob/master/dma/channel_irq/channel_irq.c Lines 35 - 52

```
35 void dma_handler() {
36     static int pwm_level = 0;
37     static uint32_t wavetable[N_PWM_LEVELS];
38     static bool first_run = true;
39     // Entry number `i` has `i` one bits and `(32 - i)` zero bits.
40     if (first_run) {
41         first_run = false;
42         for (int i = 0; i < N_PWM_LEVELS; ++i)
43             wavetable[i] = ~(~0u << i);
44     }
45
46     // Clear the interrupt request.
47     dma_hw->ints0 = 1u << dma_chan;
48     // Give the channel a new wave table entry to read from, and re-trigger it
49     dma_channel_set_read_addr(dma_chan, &wavetable[pwm_level], true);
50
51     pwm_level = (pwm_level + 1) % N_PWM_LEVELS;
52 }
```

In many cases, most of the configuration can be done the first time the channel is started, and only addresses and transfer lengths need reprogramming in the DMA handler.

Pico Examples: https://github.com/raspberrypi/pico-examples/blob/master/dma/channel_irq/channel_irq.c Lines 54 - 94

```
54 int main() {
55 #ifndef PICO_DEFAULT_LED_PIN
56 #warning dma/channel_irq example requires a board with a regular LED
57 #else
58     // Set up a PIO state machine to serialise our bits
59     uint offset = pio_add_program(pio0, &pio_serialiser_program);
60     pio_serialiser_program_init(pio0, 0, offset, PICO_DEFAULT_LED_PIN, PIO_SERIAL_CLKDIV);
61
62     // Configure a channel to write the same word (32 bits) repeatedly to PIO0
63     // SM0's TX FIFO, paced by the data request signal from that peripheral.
64     dma_chan = dma_claim_unused_channel(true);
65     dma_channel_config c = dma_channel_get_default_config(dma_chan);
66     channel_config_set_transfer_data_size(&c, DMA_SIZE_32);
67     channel_config_set_read_increment(&c, false);
68     channel_config_set_dreq(&c, DREQ_PIO0_TX0);
69
70     dma_channel_configure(
71         dma_chan,
72         &c,
73         &pio0_hw->txf[0], // Write address (only need to set this once)
74         NULL,             // Don't provide a read address yet
75         PWM_REPEAT_COUNT, // Write the same value many times, then halt and interrupt
76         false             // Don't start yet
77     );
78
```

```
79      // Tell the DMA to raise IRQ line 0 when the channel finishes a block
80      dma_channel_set_irq0_enabled(dma_chan, true);
81
82      // Configure the processor to run dma_handler() when DMA IRQ 0 is asserted
83      irq_set_exclusive_handler(DMA_IRQ_0, dma_handler);
84      irq_set_enabled(DMA_IRQ_0, true);
85
86      // Manually call the handler once, to trigger the first transfer
87      dma_handler();
88
89      // Everything else from this point is interrupt-driven. The processor has
90      // time to sit and think about its early retirement -- maybe open a bakery?
91      while (true)
92          tight_loop_contents();
93  #endif
94  }
```

One disadvantage of this technique is that we don't start to reconfigure the channel until some time after the channel makes its last transfer. If there is heavy interrupt activity on the processor, this may be quite a long time, and therefore quite a large gap in transfers, which is problematic if we need to sustain a high data throughput.

This is solved by using two channels, with their `CHAIN_TO` fields crossed over, so that channel A triggers channel B when it completes, and vice versa. At any point in time, one of the channels is transferring data, and the other is either already configured to start the next transfer immediately when the current one finishes, or it is in the process of being reconfigured. When channel A completes, it immediately starts the cued-up transfer on channel B. At the same time, the interrupt is fired, and the handler reconfigures channel A so that it is ready for when channel B completes.

2.5.6.2. DMA Control Blocks

Frequently, multiple smaller buffers must be gathered together and sent to the same peripheral. To address this use case, the RP2040 DMA can execute a long and complex *sequence* of transfers without processor control. One channel repeatedly reconfigures a second channel, and the second channel restarts the first each time it completes block of transfers.

Because the first DMA channel is transferring data directly from memory to the second channel's control registers, the format of the control blocks in memory must match those registers. The last register written to, each time, will be one of the trigger registers (Section 2.5.2.1) which will start the second channel on its programmed block of transfers. The register aliases (Section 2.5.2.1) give some flexibility for the block layout, and more importantly allow some registers to be omitted from the blocks, so they occupy less memory and can be loaded more quickly.

This example shows how multiple buffers can be gathered and transferred to the UART, by reprogramming `TRANS_COUNT` and `READ_ADDR_TRIG`:

Pico Examples: https://github.com/raspberrypi/pico-examples/blob/master/dma/control_blocks/control_blocks.c

```
1  /**
2   * Copyright (c) 2020 Raspberry Pi (Trading) Ltd.
3   *
4   * SPDX-License-Identifier: BSD-3-Clause
5   */
6
7  // Use two DMA channels to make a programmed sequence of data transfers to the
8  // UART (a data gather operation). One channel is responsible for transferring
9  // the actual data, the other repeatedly reprograms that channel.
10
11 #include <stdio.h>
12 #include "pico/stdlib.h"
13 #include "hardware/dma.h"
14 #include "hardware/structs/uart.h"
```

```
15
16 // These buffers will be DMA'd to the UART, one after the other.
17
18 const char word0[] = "Transferring ";
19 const char word1[] = "one ";
20 const char word2[] = "word ";
21 const char word3[] = "at ";
22 const char word4[] = "a ";
23 const char word5[] = "time.\n";
24
25 // Note the order of the fields here: it's important that the length is before
26 // the read address, because the control channel is going to write to the last
27 // two registers in alias 3 on the data channel:
28 //           +0x0        +0x4          +0x8          +0xC (Trigger)
29 // Alias 0:  READ_ADDR   WRITE_ADDR    TRANS_COUNT   CTRL
30 // Alias 1:  CTRL        READ_ADDR     WRITE_ADDR    TRANS_COUNT
31 // Alias 2:  CTRL        TRANS_COUNT   READ_ADDR     WRITE_ADDR
32 // Alias 3:  CTRL        WRITE_ADDR    TRANS_COUNT   READ_ADDR
33 //
34 // This will program the transfer count and read address of the data channel,
35 // and trigger it. Once the data channel completes, it will restart the
36 // control channel (via CHAIN_TO) to load the next two words into its control
37 // registers.
38
39 const struct {uint32_t len; const char *data;} control_blocks[] = {
40     {count_of(word0) - 1, word0}, // Skip null terminator
41     {count_of(word1) - 1, word1},
42     {count_of(word2) - 1, word2},
43     {count_of(word3) - 1, word3},
44     {count_of(word4) - 1, word4},
45     {count_of(word5) - 1, word5},
46     {0, NULL}                     // Null trigger to end chain.
47 };
48
49 int main() {
50 #ifndef uart_default
51 #warning dma/control_blocks example requires a UART
52 #else
53     stdio_init_all();
54     puts("DMA control block example:");
55
56     // ctrl_chan loads control blocks into data_chan, which executes them.
57     int ctrl_chan = dma_claim_unused_channel(true);
58     int data_chan = dma_claim_unused_channel(true);
59
60     // The control channel transfers two words into the data channel's control
61     // registers, then halts. The write address wraps on a two-word
62     // (eight-byte) boundary, so that the control channel writes the same two
63     // registers when it is next triggered.
64
65     dma_channel_config c = dma_channel_get_default_config(ctrl_chan);
66     channel_config_set_transfer_data_size(&c, DMA_SIZE_32);
67     channel_config_set_read_increment(&c, true);
68     channel_config_set_write_increment(&c, true);
69     channel_config_set_ring(&c, true, 3); // 1 << 3 byte boundary on write ptr
70
71     dma_channel_configure(
72         ctrl_chan,
73         &c,
74         &dma_hw->ch[data_chan].al3_transfer_count, // Initial write address
75         &control_blocks[0],                        // Initial read address
76         2,                                         // Halt after each control block
77         false                                      // Don't start yet
78     );
```

```
79
80      // The data channel is set up to write to the UART FIFO (paced by the
81      // UART's TX data request signal) and then chain to the control channel
82      // once it completes. The control channel programs a new read address and
83      // data length, and retriggers the data channel.
84
85      c = dma_channel_get_default_config(data_chan);
86      channel_config_set_transfer_data_size(&c, DMA_SIZE_8);
87      channel_config_set_dreq(&c, uart_get_dreq(uart_default, true));
88      // Trigger ctrl_chan when data_chan completes
89      channel_config_set_chain_to(&c, ctrl_chan);
90      // Raise the IRQ flag when 0 is written to a trigger register (end of chain):
91      channel_config_set_irq_quiet(&c, true);
92
93      dma_channel_configure(
94          data_chan,
95          &c,
96          &uart_get_hw(uart_default)->dr,
97          NULL,           // Initial read address and transfer count are unimportant;
98          0,              // the control channel will reprogram them each time.
99          false           // Don't start yet.
100     );
101
102     // Everything is ready to go. Tell the control channel to load the first
103     // control block. Everything is automatic from here.
104     dma_start_channel_mask(1u << ctrl_chan);
105
106     // The data channel will assert its IRQ flag when it gets a null trigger,
107     // indicating the end of the control block list. We're just going to wait
108     // for the IRQ flag instead of setting up an interrupt handler.
109     while (!(dma_hw->intr & 1u << data_chan))
110         tight_loop_contents();
111     dma_hw->ints0 = 1u << data_chan;
112
113     puts("DMA finished.");
114 #endif
115 }
```

2.5.7. List of Registers

The DMA registers start at a base address of `0x50000000` (defined as DMA_BASE in SDK).

Table 120. List of DMA registers

Offset	Name	Info
0x000	CH0_READ_ADDR	DMA Channel 0 Read Address pointer
0x004	CH0_WRITE_ADDR	DMA Channel 0 Write Address pointer
0x008	CH0_TRANS_COUNT	DMA Channel 0 Transfer Count
0x00c	CH0_CTRL_TRIG	DMA Channel 0 Control and Status
0x010	CH0_AL1_CTRL	Alias for channel 0 CTRL register
0x014	CH0_AL1_READ_ADDR	Alias for channel 0 READ_ADDR register
0x018	CH0_AL1_WRITE_ADDR	Alias for channel 0 WRITE_ADDR register
0x01c	CH0_AL1_TRANS_COUNT_TRIG	Alias for channel 0 TRANS_COUNT register This is a trigger register (0xc). Writing a nonzero value will reload the channel counter and start the channel.
0x020	CH0_AL2_CTRL	Alias for channel 0 CTRL register

Offset	Name	Info
0x024	CH0_AL2_TRANS_COUNT	Alias for channel 0 TRANS_COUNT register
0x028	CH0_AL2_READ_ADDR	Alias for channel 0 READ_ADDR register
0x02c	CH0_AL2_WRITE_ADDR_TRIG	Alias for channel 0 WRITE_ADDR register This is a trigger register (0xc). Writing a nonzero value will reload the channel counter and start the channel.
0x030	CH0_AL3_CTRL	Alias for channel 0 CTRL register
0x034	CH0_AL3_WRITE_ADDR	Alias for channel 0 WRITE_ADDR register
0x038	CH0_AL3_TRANS_COUNT	Alias for channel 0 TRANS_COUNT register
0x03c	CH0_AL3_READ_ADDR_TRIG	Alias for channel 0 READ_ADDR register This is a trigger register (0xc). Writing a nonzero value will reload the channel counter and start the channel.
0x040	CH1_READ_ADDR	DMA Channel 1 Read Address pointer
0x044	CH1_WRITE_ADDR	DMA Channel 1 Write Address pointer
0x048	CH1_TRANS_COUNT	DMA Channel 1 Transfer Count
0x04c	CH1_CTRL_TRIG	DMA Channel 1 Control and Status
0x050	CH1_AL1_CTRL	Alias for channel 1 CTRL register
0x054	CH1_AL1_READ_ADDR	Alias for channel 1 READ_ADDR register
0x058	CH1_AL1_WRITE_ADDR	Alias for channel 1 WRITE_ADDR register
0x05c	CH1_AL1_TRANS_COUNT_TRIG	Alias for channel 1 TRANS_COUNT register This is a trigger register (0xc). Writing a nonzero value will reload the channel counter and start the channel.
0x060	CH1_AL2_CTRL	Alias for channel 1 CTRL register
0x064	CH1_AL2_TRANS_COUNT	Alias for channel 1 TRANS_COUNT register
0x068	CH1_AL2_READ_ADDR	Alias for channel 1 READ_ADDR register
0x06c	CH1_AL2_WRITE_ADDR_TRIG	Alias for channel 1 WRITE_ADDR register This is a trigger register (0xc). Writing a nonzero value will reload the channel counter and start the channel.
0x070	CH1_AL3_CTRL	Alias for channel 1 CTRL register
0x074	CH1_AL3_WRITE_ADDR	Alias for channel 1 WRITE_ADDR register
0x078	CH1_AL3_TRANS_COUNT	Alias for channel 1 TRANS_COUNT register
0x07c	CH1_AL3_READ_ADDR_TRIG	Alias for channel 1 READ_ADDR register This is a trigger register (0xc). Writing a nonzero value will reload the channel counter and start the channel.
0x080	CH2_READ_ADDR	DMA Channel 2 Read Address pointer
0x084	CH2_WRITE_ADDR	DMA Channel 2 Write Address pointer
0x088	CH2_TRANS_COUNT	DMA Channel 2 Transfer Count
0x08c	CH2_CTRL_TRIG	DMA Channel 2 Control and Status
0x090	CH2_AL1_CTRL	Alias for channel 2 CTRL register
0x094	CH2_AL1_READ_ADDR	Alias for channel 2 READ_ADDR register

Offset	Name	Info
0x098	CH2_AL1_WRITE_ADDR	Alias for channel 2 WRITE_ADDR register
0x09c	CH2_AL1_TRANS_COUNT_TRIG	Alias for channel 2 TRANS_COUNT register This is a trigger register (0xc). Writing a nonzero value will reload the channel counter and start the channel.
0x0a0	CH2_AL2_CTRL	Alias for channel 2 CTRL register
0x0a4	CH2_AL2_TRANS_COUNT	Alias for channel 2 TRANS_COUNT register
0x0a8	CH2_AL2_READ_ADDR	Alias for channel 2 READ_ADDR register
0x0ac	CH2_AL2_WRITE_ADDR_TRIG	Alias for channel 2 WRITE_ADDR register This is a trigger register (0xc). Writing a nonzero value will reload the channel counter and start the channel.
0x0b0	CH2_AL3_CTRL	Alias for channel 2 CTRL register
0x0b4	CH2_AL3_WRITE_ADDR	Alias for channel 2 WRITE_ADDR register
0x0b8	CH2_AL3_TRANS_COUNT	Alias for channel 2 TRANS_COUNT register
0x0bc	CH2_AL3_READ_ADDR_TRIG	Alias for channel 2 READ_ADDR register This is a trigger register (0xc). Writing a nonzero value will reload the channel counter and start the channel.
0x0c0	CH3_READ_ADDR	DMA Channel 3 Read Address pointer
0x0c4	CH3_WRITE_ADDR	DMA Channel 3 Write Address pointer
0x0c8	CH3_TRANS_COUNT	DMA Channel 3 Transfer Count
0x0cc	CH3_CTRL_TRIG	DMA Channel 3 Control and Status
0x0d0	CH3_AL1_CTRL	Alias for channel 3 CTRL register
0x0d4	CH3_AL1_READ_ADDR	Alias for channel 3 READ_ADDR register
0x0d8	CH3_AL1_WRITE_ADDR	Alias for channel 3 WRITE_ADDR register
0x0dc	CH3_AL1_TRANS_COUNT_TRIG	Alias for channel 3 TRANS_COUNT register This is a trigger register (0xc). Writing a nonzero value will reload the channel counter and start the channel.
0x0e0	CH3_AL2_CTRL	Alias for channel 3 CTRL register
0x0e4	CH3_AL2_TRANS_COUNT	Alias for channel 3 TRANS_COUNT register
0x0e8	CH3_AL2_READ_ADDR	Alias for channel 3 READ_ADDR register
0x0ec	CH3_AL2_WRITE_ADDR_TRIG	Alias for channel 3 WRITE_ADDR register This is a trigger register (0xc). Writing a nonzero value will reload the channel counter and start the channel.
0x0f0	CH3_AL3_CTRL	Alias for channel 3 CTRL register
0x0f4	CH3_AL3_WRITE_ADDR	Alias for channel 3 WRITE_ADDR register
0x0f8	CH3_AL3_TRANS_COUNT	Alias for channel 3 TRANS_COUNT register
0x0fc	CH3_AL3_READ_ADDR_TRIG	Alias for channel 3 READ_ADDR register This is a trigger register (0xc). Writing a nonzero value will reload the channel counter and start the channel.
0x100	CH4_READ_ADDR	DMA Channel 4 Read Address pointer
0x104	CH4_WRITE_ADDR	DMA Channel 4 Write Address pointer

Offset	Name	Info
0x108	CH4_TRANS_COUNT	DMA Channel 4 Transfer Count
0x10c	CH4_CTRL_TRIG	DMA Channel 4 Control and Status
0x110	CH4_AL1_CTRL	Alias for channel 4 CTRL register
0x114	CH4_AL1_READ_ADDR	Alias for channel 4 READ_ADDR register
0x118	CH4_AL1_WRITE_ADDR	Alias for channel 4 WRITE_ADDR register
0x11c	CH4_AL1_TRANS_COUNT_TRIG	Alias for channel 4 TRANS_COUNT register This is a trigger register (0xc). Writing a nonzero value will reload the channel counter and start the channel.
0x120	CH4_AL2_CTRL	Alias for channel 4 CTRL register
0x124	CH4_AL2_TRANS_COUNT	Alias for channel 4 TRANS_COUNT register
0x128	CH4_AL2_READ_ADDR	Alias for channel 4 READ_ADDR register
0x12c	CH4_AL2_WRITE_ADDR_TRIG	Alias for channel 4 WRITE_ADDR register This is a trigger register (0xc). Writing a nonzero value will reload the channel counter and start the channel.
0x130	CH4_AL3_CTRL	Alias for channel 4 CTRL register
0x134	CH4_AL3_WRITE_ADDR	Alias for channel 4 WRITE_ADDR register
0x138	CH4_AL3_TRANS_COUNT	Alias for channel 4 TRANS_COUNT register
0x13c	CH4_AL3_READ_ADDR_TRIG	Alias for channel 4 READ_ADDR register This is a trigger register (0xc). Writing a nonzero value will reload the channel counter and start the channel.
0x140	CH5_READ_ADDR	DMA Channel 5 Read Address pointer
0x144	CH5_WRITE_ADDR	DMA Channel 5 Write Address pointer
0x148	CH5_TRANS_COUNT	DMA Channel 5 Transfer Count
0x14c	CH5_CTRL_TRIG	DMA Channel 5 Control and Status
0x150	CH5_AL1_CTRL	Alias for channel 5 CTRL register
0x154	CH5_AL1_READ_ADDR	Alias for channel 5 READ_ADDR register
0x158	CH5_AL1_WRITE_ADDR	Alias for channel 5 WRITE_ADDR register
0x15c	CH5_AL1_TRANS_COUNT_TRIG	Alias for channel 5 TRANS_COUNT register This is a trigger register (0xc). Writing a nonzero value will reload the channel counter and start the channel.
0x160	CH5_AL2_CTRL	Alias for channel 5 CTRL register
0x164	CH5_AL2_TRANS_COUNT	Alias for channel 5 TRANS_COUNT register
0x168	CH5_AL2_READ_ADDR	Alias for channel 5 READ_ADDR register
0x16c	CH5_AL2_WRITE_ADDR_TRIG	Alias for channel 5 WRITE_ADDR register This is a trigger register (0xc). Writing a nonzero value will reload the channel counter and start the channel.
0x170	CH5_AL3_CTRL	Alias for channel 5 CTRL register
0x174	CH5_AL3_WRITE_ADDR	Alias for channel 5 WRITE_ADDR register
0x178	CH5_AL3_TRANS_COUNT	Alias for channel 5 TRANS_COUNT register

Offset	Name	Info
0x17c	CH5_AL3_READ_ADDR_TRIG	Alias for channel 5 READ_ADDR register This is a trigger register (0xc). Writing a nonzero value will reload the channel counter and start the channel.
0x180	CH6_READ_ADDR	DMA Channel 6 Read Address pointer
0x184	CH6_WRITE_ADDR	DMA Channel 6 Write Address pointer
0x188	CH6_TRANS_COUNT	DMA Channel 6 Transfer Count
0x18c	CH6_CTRL_TRIG	DMA Channel 6 Control and Status
0x190	CH6_AL1_CTRL	Alias for channel 6 CTRL register
0x194	CH6_AL1_READ_ADDR	Alias for channel 6 READ_ADDR register
0x198	CH6_AL1_WRITE_ADDR	Alias for channel 6 WRITE_ADDR register
0x19c	CH6_AL1_TRANS_COUNT_TRIG	Alias for channel 6 TRANS_COUNT register This is a trigger register (0xc). Writing a nonzero value will reload the channel counter and start the channel.
0x1a0	CH6_AL2_CTRL	Alias for channel 6 CTRL register
0x1a4	CH6_AL2_TRANS_COUNT	Alias for channel 6 TRANS_COUNT register
0x1a8	CH6_AL2_READ_ADDR	Alias for channel 6 READ_ADDR register
0x1ac	CH6_AL2_WRITE_ADDR_TRIG	Alias for channel 6 WRITE_ADDR register This is a trigger register (0xc). Writing a nonzero value will reload the channel counter and start the channel.
0x1b0	CH6_AL3_CTRL	Alias for channel 6 CTRL register
0x1b4	CH6_AL3_WRITE_ADDR	Alias for channel 6 WRITE_ADDR register
0x1b8	CH6_AL3_TRANS_COUNT	Alias for channel 6 TRANS_COUNT register
0x1bc	CH6_AL3_READ_ADDR_TRIG	Alias for channel 6 READ_ADDR register This is a trigger register (0xc). Writing a nonzero value will reload the channel counter and start the channel.
0x1c0	CH7_READ_ADDR	DMA Channel 7 Read Address pointer
0x1c4	CH7_WRITE_ADDR	DMA Channel 7 Write Address pointer
0x1c8	CH7_TRANS_COUNT	DMA Channel 7 Transfer Count
0x1cc	CH7_CTRL_TRIG	DMA Channel 7 Control and Status
0x1d0	CH7_AL1_CTRL	Alias for channel 7 CTRL register
0x1d4	CH7_AL1_READ_ADDR	Alias for channel 7 READ_ADDR register
0x1d8	CH7_AL1_WRITE_ADDR	Alias for channel 7 WRITE_ADDR register
0x1dc	CH7_AL1_TRANS_COUNT_TRIG	Alias for channel 7 TRANS_COUNT register This is a trigger register (0xc). Writing a nonzero value will reload the channel counter and start the channel.
0x1e0	CH7_AL2_CTRL	Alias for channel 7 CTRL register
0x1e4	CH7_AL2_TRANS_COUNT	Alias for channel 7 TRANS_COUNT register
0x1e8	CH7_AL2_READ_ADDR	Alias for channel 7 READ_ADDR register

Offset	Name	Info
0x1ec	CH7_AL2_WRITE_ADDR_TRIG	Alias for channel 7 WRITE_ADDR register This is a trigger register (0xc). Writing a nonzero value will reload the channel counter and start the channel.
0x1f0	CH7_AL3_CTRL	Alias for channel 7 CTRL register
0x1f4	CH7_AL3_WRITE_ADDR	Alias for channel 7 WRITE_ADDR register
0x1f8	CH7_AL3_TRANS_COUNT	Alias for channel 7 TRANS_COUNT register
0x1fc	CH7_AL3_READ_ADDR_TRIG	Alias for channel 7 READ_ADDR register This is a trigger register (0xc). Writing a nonzero value will reload the channel counter and start the channel.
0x200	CH8_READ_ADDR	DMA Channel 8 Read Address pointer
0x204	CH8_WRITE_ADDR	DMA Channel 8 Write Address pointer
0x208	CH8_TRANS_COUNT	DMA Channel 8 Transfer Count
0x20c	CH8_CTRL_TRIG	DMA Channel 8 Control and Status
0x210	CH8_AL1_CTRL	Alias for channel 8 CTRL register
0x214	CH8_AL1_READ_ADDR	Alias for channel 8 READ_ADDR register
0x218	CH8_AL1_WRITE_ADDR	Alias for channel 8 WRITE_ADDR register
0x21c	CH8_AL1_TRANS_COUNT_TRIG	Alias for channel 8 TRANS_COUNT register This is a trigger register (0xc). Writing a nonzero value will reload the channel counter and start the channel.
0x220	CH8_AL2_CTRL	Alias for channel 8 CTRL register
0x224	CH8_AL2_TRANS_COUNT	Alias for channel 8 TRANS_COUNT register
0x228	CH8_AL2_READ_ADDR	Alias for channel 8 READ_ADDR register
0x22c	CH8_AL2_WRITE_ADDR_TRIG	Alias for channel 8 WRITE_ADDR register This is a trigger register (0xc). Writing a nonzero value will reload the channel counter and start the channel.
0x230	CH8_AL3_CTRL	Alias for channel 8 CTRL register
0x234	CH8_AL3_WRITE_ADDR	Alias for channel 8 WRITE_ADDR register
0x238	CH8_AL3_TRANS_COUNT	Alias for channel 8 TRANS_COUNT register
0x23c	CH8_AL3_READ_ADDR_TRIG	Alias for channel 8 READ_ADDR register This is a trigger register (0xc). Writing a nonzero value will reload the channel counter and start the channel.
0x240	CH9_READ_ADDR	DMA Channel 9 Read Address pointer
0x244	CH9_WRITE_ADDR	DMA Channel 9 Write Address pointer
0x248	CH9_TRANS_COUNT	DMA Channel 9 Transfer Count
0x24c	CH9_CTRL_TRIG	DMA Channel 9 Control and Status
0x250	CH9_AL1_CTRL	Alias for channel 9 CTRL register
0x254	CH9_AL1_READ_ADDR	Alias for channel 9 READ_ADDR register
0x258	CH9_AL1_WRITE_ADDR	Alias for channel 9 WRITE_ADDR register

Offset	Name	Info
0x25c	CH9_AL1_TRANS_COUNT_TRIG	Alias for channel 9 TRANS_COUNT register This is a trigger register (0xc). Writing a nonzero value will reload the channel counter and start the channel.
0x260	CH9_AL2_CTRL	Alias for channel 9 CTRL register
0x264	CH9_AL2_TRANS_COUNT	Alias for channel 9 TRANS_COUNT register
0x268	CH9_AL2_READ_ADDR	Alias for channel 9 READ_ADDR register
0x26c	CH9_AL2_WRITE_ADDR_TRIG	Alias for channel 9 WRITE_ADDR register This is a trigger register (0xc). Writing a nonzero value will reload the channel counter and start the channel.
0x270	CH9_AL3_CTRL	Alias for channel 9 CTRL register
0x274	CH9_AL3_WRITE_ADDR	Alias for channel 9 WRITE_ADDR register
0x278	CH9_AL3_TRANS_COUNT	Alias for channel 9 TRANS_COUNT register
0x27c	CH9_AL3_READ_ADDR_TRIG	Alias for channel 9 READ_ADDR register This is a trigger register (0xc). Writing a nonzero value will reload the channel counter and start the channel.
0x280	CH10_READ_ADDR	DMA Channel 10 Read Address pointer
0x284	CH10_WRITE_ADDR	DMA Channel 10 Write Address pointer
0x288	CH10_TRANS_COUNT	DMA Channel 10 Transfer Count
0x28c	CH10_CTRL_TRIG	DMA Channel 10 Control and Status
0x290	CH10_AL1_CTRL	Alias for channel 10 CTRL register
0x294	CH10_AL1_READ_ADDR	Alias for channel 10 READ_ADDR register
0x298	CH10_AL1_WRITE_ADDR	Alias for channel 10 WRITE_ADDR register
0x29c	CH10_AL1_TRANS_COUNT_TRIG	Alias for channel 10 TRANS_COUNT register This is a trigger register (0xc). Writing a nonzero value will reload the channel counter and start the channel.
0x2a0	CH10_AL2_CTRL	Alias for channel 10 CTRL register
0x2a4	CH10_AL2_TRANS_COUNT	Alias for channel 10 TRANS_COUNT register
0x2a8	CH10_AL2_READ_ADDR	Alias for channel 10 READ_ADDR register
0x2ac	CH10_AL2_WRITE_ADDR_TRIG	Alias for channel 10 WRITE_ADDR register This is a trigger register (0xc). Writing a nonzero value will reload the channel counter and start the channel.
0x2b0	CH10_AL3_CTRL	Alias for channel 10 CTRL register
0x2b4	CH10_AL3_WRITE_ADDR	Alias for channel 10 WRITE_ADDR register
0x2b8	CH10_AL3_TRANS_COUNT	Alias for channel 10 TRANS_COUNT register
0x2bc	CH10_AL3_READ_ADDR_TRIG	Alias for channel 10 READ_ADDR register This is a trigger register (0xc). Writing a nonzero value will reload the channel counter and start the channel.
0x2c0	CH11_READ_ADDR	DMA Channel 11 Read Address pointer
0x2c4	CH11_WRITE_ADDR	DMA Channel 11 Write Address pointer
0x2c8	CH11_TRANS_COUNT	DMA Channel 11 Transfer Count

Offset	Name	Info
0x2cc	CH11_CTRL_TRIG	DMA Channel 11 Control and Status
0x2d0	CH11_AL1_CTRL	Alias for channel 11 CTRL register
0x2d4	CH11_AL1_READ_ADDR	Alias for channel 11 READ_ADDR register
0x2d8	CH11_AL1_WRITE_ADDR	Alias for channel 11 WRITE_ADDR register
0x2dc	CH11_AL1_TRANS_COUNT_TRIG	Alias for channel 11 TRANS_COUNT register This is a trigger register (0xc). Writing a nonzero value will reload the channel counter and start the channel.
0x2e0	CH11_AL2_CTRL	Alias for channel 11 CTRL register
0x2e4	CH11_AL2_TRANS_COUNT	Alias for channel 11 TRANS_COUNT register
0x2e8	CH11_AL2_READ_ADDR	Alias for channel 11 READ_ADDR register
0x2ec	CH11_AL2_WRITE_ADDR_TRIG	Alias for channel 11 WRITE_ADDR register This is a trigger register (0xc). Writing a nonzero value will reload the channel counter and start the channel.
0x2f0	CH11_AL3_CTRL	Alias for channel 11 CTRL register
0x2f4	CH11_AL3_WRITE_ADDR	Alias for channel 11 WRITE_ADDR register
0x2f8	CH11_AL3_TRANS_COUNT	Alias for channel 11 TRANS_COUNT register
0x2fc	CH11_AL3_READ_ADDR_TRIG	Alias for channel 11 READ_ADDR register This is a trigger register (0xc). Writing a nonzero value will reload the channel counter and start the channel.
0x400	INTR	Interrupt Status (raw)
0x404	INTE0	Interrupt Enables for IRQ 0
0x408	INTF0	Force Interrupts
0x40c	INTS0	Interrupt Status for IRQ 0
0x414	INTE1	Interrupt Enables for IRQ 1
0x418	INTF1	Force Interrupts for IRQ 1
0x41c	INTS1	Interrupt Status (masked) for IRQ 1
0x420	TIMER0	Pacing (X/Y) Fractional Timer The pacing timer produces TREQ assertions at a rate set by ((X/Y) * sys_clk). This equation is evaluated every sys_clk cycles and therefore can only generate TREQs at a rate of 1 per sys_clk (i.e. permanent TREQ) or less.
0x424	TIMER1	Pacing (X/Y) Fractional Timer The pacing timer produces TREQ assertions at a rate set by ((X/Y) * sys_clk). This equation is evaluated every sys_clk cycles and therefore can only generate TREQs at a rate of 1 per sys_clk (i.e. permanent TREQ) or less.
0x428	TIMER2	Pacing (X/Y) Fractional Timer The pacing timer produces TREQ assertions at a rate set by ((X/Y) * sys_clk). This equation is evaluated every sys_clk cycles and therefore can only generate TREQs at a rate of 1 per sys_clk (i.e. permanent TREQ) or less.

Offset	Name	Info
0x42c	TIMER3	Pacing (X/Y) Fractional Timer The pacing timer produces TREQ assertions at a rate set by ((X/Y) * sys_clk). This equation is evaluated every sys_clk cycles and therefore can only generate TREQs at a rate of 1 per sys_clk (i.e. permanent TREQ) or less.
0x430	MULTI_CHAN_TRIGGER	Trigger one or more channels simultaneously
0x434	SNIFF_CTRL	Sniffer Control
0x438	SNIFF_DATA	Data accumulator for sniff hardware
0x440	FIFO_LEVELS	Debug RAF, WAF, TDF levels
0x444	CHAN_ABORT	Abort an in-progress transfer sequence on one or more channels
0x448	N_CHANNELS	The number of channels this DMA instance is equipped with. This DMA supports up to 16 hardware channels, but can be configured with as few as one, to minimise silicon area.
0x800	CH0_DBG_CTDREQ	Read: get channel DREQ counter (i.e. how many accesses the DMA expects it can perform on the peripheral without overflow/underflow. Write any value: clears the counter, and cause channel to re-initiate DREQ handshake.
0x804	CH0_DBG_TCR	Read to get channel TRANS_COUNT reload value, i.e. the length of the next transfer
0x840	CH1_DBG_CTDREQ	Read: get channel DREQ counter (i.e. how many accesses the DMA expects it can perform on the peripheral without overflow/underflow. Write any value: clears the counter, and cause channel to re-initiate DREQ handshake.
0x844	CH1_DBG_TCR	Read to get channel TRANS_COUNT reload value, i.e. the length of the next transfer
0x880	CH2_DBG_CTDREQ	Read: get channel DREQ counter (i.e. how many accesses the DMA expects it can perform on the peripheral without overflow/underflow. Write any value: clears the counter, and cause channel to re-initiate DREQ handshake.
0x884	CH2_DBG_TCR	Read to get channel TRANS_COUNT reload value, i.e. the length of the next transfer
0x8c0	CH3_DBG_CTDREQ	Read: get channel DREQ counter (i.e. how many accesses the DMA expects it can perform on the peripheral without overflow/underflow. Write any value: clears the counter, and cause channel to re-initiate DREQ handshake.
0x8c4	CH3_DBG_TCR	Read to get channel TRANS_COUNT reload value, i.e. the length of the next transfer
0x900	CH4_DBG_CTDREQ	Read: get channel DREQ counter (i.e. how many accesses the DMA expects it can perform on the peripheral without overflow/underflow. Write any value: clears the counter, and cause channel to re-initiate DREQ handshake.
0x904	CH4_DBG_TCR	Read to get channel TRANS_COUNT reload value, i.e. the length of the next transfer

Offset	Name	Info
0x940	CH5_DBG_CTDREQ	Read: get channel DREQ counter (i.e. how many accesses the DMA expects it can perform on the peripheral without overflow/underflow. Write any value: clears the counter, and cause channel to re-initiate DREQ handshake.
0x944	CH5_DBG_TCR	Read to get channel TRANS_COUNT reload value, i.e. the length of the next transfer
0x980	CH6_DBG_CTDREQ	Read: get channel DREQ counter (i.e. how many accesses the DMA expects it can perform on the peripheral without overflow/underflow. Write any value: clears the counter, and cause channel to re-initiate DREQ handshake.
0x984	CH6_DBG_TCR	Read to get channel TRANS_COUNT reload value, i.e. the length of the next transfer
0x9c0	CH7_DBG_CTDREQ	Read: get channel DREQ counter (i.e. how many accesses the DMA expects it can perform on the peripheral without overflow/underflow. Write any value: clears the counter, and cause channel to re-initiate DREQ handshake.
0x9c4	CH7_DBG_TCR	Read to get channel TRANS_COUNT reload value, i.e. the length of the next transfer
0xa00	CH8_DBG_CTDREQ	Read: get channel DREQ counter (i.e. how many accesses the DMA expects it can perform on the peripheral without overflow/underflow. Write any value: clears the counter, and cause channel to re-initiate DREQ handshake.
0xa04	CH8_DBG_TCR	Read to get channel TRANS_COUNT reload value, i.e. the length of the next transfer
0xa40	CH9_DBG_CTDREQ	Read: get channel DREQ counter (i.e. how many accesses the DMA expects it can perform on the peripheral without overflow/underflow. Write any value: clears the counter, and cause channel to re-initiate DREQ handshake.
0xa44	CH9_DBG_TCR	Read to get channel TRANS_COUNT reload value, i.e. the length of the next transfer
0xa80	CH10_DBG_CTDREQ	Read: get channel DREQ counter (i.e. how many accesses the DMA expects it can perform on the peripheral without overflow/underflow. Write any value: clears the counter, and cause channel to re-initiate DREQ handshake.
0xa84	CH10_DBG_TCR	Read to get channel TRANS_COUNT reload value, i.e. the length of the next transfer
0xac0	CH11_DBG_CTDREQ	Read: get channel DREQ counter (i.e. how many accesses the DMA expects it can perform on the peripheral without overflow/underflow. Write any value: clears the counter, and cause channel to re-initiate DREQ handshake.
0xac4	CH11_DBG_TCR	Read to get channel TRANS_COUNT reload value, i.e. the length of the next transfer

DMA: CH0_READ_ADDR, CH1_READ_ADDR, …, CH10_READ_ADDR, CH11_READ_ADDR Registers

Offsets: 0x000, 0x040, …, 0x280, 0x2c0

Description

DMA Channel *N* Read Address pointer

Table 121. CH0_READ_ADDR, CH1_READ_ADDR, ..., CH10_READ_ADDR, CH11_READ_ADDR Registers

Bits	Description	Type	Reset
31:0	This register updates automatically each time a read completes. The current value is the next address to be read by this channel.	RW	0x00000000

DMA: CH0_WRITE_ADDR, CH1_WRITE_ADDR, ..., CH10_WRITE_ADDR, CH11_WRITE_ADDR Registers

Offsets: 0x004, 0x044, ..., 0x284, 0x2c4

Description

DMA Channel *N* Write Address pointer

Table 122. CH0_WRITE_ADDR, CH1_WRITE_ADDR, ..., CH10_WRITE_ADDR, CH11_WRITE_ADDR Registers

Bits	Description	Type	Reset
31:0	This register updates automatically each time a write completes. The current value is the next address to be written by this channel.	RW	0x00000000

DMA: CH0_TRANS_COUNT, CH1_TRANS_COUNT, ..., CH10_TRANS_COUNT, CH11_TRANS_COUNT Registers

Offsets: 0x008, 0x048, ..., 0x288, 0x2c8

Description

DMA Channel *N* Transfer Count

Table 123. CH0_TRANS_COUNT, CH1_TRANS_COUNT, ..., CH10_TRANS_COUNT, CH11_TRANS_COUNT Registers

Bits	Description	Type	Reset
31:0	Program the number of bus transfers a channel will perform before halting. Note that, if transfers are larger than one byte in size, this is not equal to the number of bytes transferred (see CTRL_DATA_SIZE). When the channel is active, reading this register shows the number of transfers remaining, updating automatically each time a write transfer completes. Writing this register sets the RELOAD value for the transfer counter. Each time this channel is triggered, the RELOAD value is copied into the live transfer counter. The channel can be started multiple times, and will perform the same number of transfers each time, as programmed by most recent write. The RELOAD value can be observed at CHx_DBG_TCR. If TRANS_COUNT is used as a trigger, the written value is used immediately as the length of the new transfer sequence, as well as being written to RELOAD.	RW	0x00000000

DMA: CH0_CTRL_TRIG, CH1_CTRL_TRIG, ..., CH10_CTRL_TRIG, CH11_CTRL_TRIG Registers

Offsets: 0x00c, 0x04c, ..., 0x28c, 0x2cc

Description

DMA Channel *N* Control and Status

Table 124. CH0_CTRL_TRIG, CH1_CTRL_TRIG, …, CH10_CTRL_TRIG, CH11_CTRL_TRIG Registers

Bits	Description	Type	Reset
31	**AHB_ERROR**: Logical OR of the READ_ERROR and WRITE_ERROR flags. The channel halts when it encounters any bus error, and always raises its channel IRQ flag.	RO	0x0
30	**READ_ERROR**: If 1, the channel received a read bus error. Write one to clear. READ_ADDR shows the approximate address where the bus error was encountered (will not be earlier, or more than 3 transfers later)	WC	0x0
29	**WRITE_ERROR**: If 1, the channel received a write bus error. Write one to clear. WRITE_ADDR shows the approximate address where the bus error was encountered (will not be earlier, or more than 5 transfers later)	WC	0x0
28:25	Reserved.	-	-
24	**BUSY**: This flag goes high when the channel starts a new transfer sequence, and low when the last transfer of that sequence completes. Clearing EN while BUSY is high pauses the channel, and BUSY will stay high while paused. To terminate a sequence early (and clear the BUSY flag), see CHAN_ABORT.	RO	0x0
23	**SNIFF_EN**: If 1, this channel's data transfers are visible to the sniff hardware, and each transfer will advance the state of the checksum. This only applies if the sniff hardware is enabled, and has this channel selected. This allows checksum to be enabled or disabled on a per-control- block basis.	RW	0x0
22	**BSWAP**: Apply byte-swap transformation to DMA data. For byte data, this has no effect. For halfword data, the two bytes of each halfword are swapped. For word data, the four bytes of each word are swapped to reverse order.	RW	0x0
21	**IRQ_QUIET**: In QUIET mode, the channel does not generate IRQs at the end of every transfer block. Instead, an IRQ is raised when NULL is written to a trigger register, indicating the end of a control block chain. This reduces the number of interrupts to be serviced by the CPU when transferring a DMA chain of many small control blocks.	RW	0x0
20:15	**TREQ_SEL**: Select a Transfer Request signal. The channel uses the transfer request signal to pace its data transfer rate. Sources for TREQ signals are internal (TIMERS) or external (DREQ, a Data Request from the system). 0x0 to 0x3a → select DREQ n as TREQ	RW	0x00
	Enumerated values:		
	0x3b → TIMER0: Select Timer 0 as TREQ		
	0x3c → TIMER1: Select Timer 1 as TREQ		
	0x3d → TIMER2: Select Timer 2 as TREQ (Optional)		
	0x3e → TIMER3: Select Timer 3 as TREQ (Optional)		
	0x3f → PERMANENT: Permanent request, for unpaced transfers.		
14:11	**CHAIN_TO**: When this channel completes, it will trigger the channel indicated by CHAIN_TO. Disable by setting CHAIN_TO = *(this channel)*.	RW	0x0
10	**RING_SEL**: Select whether RING_SIZE applies to read or write addresses. If 0, read addresses are wrapped on a (1 << RING_SIZE) boundary. If 1, write addresses are wrapped.	RW	0x0

Bits	Description	Type	Reset
9:6	**RING_SIZE**: Size of address wrap region. If 0, don't wrap. For values n > 0, only the lower n bits of the address will change. This wraps the address on a (1 << n) byte boundary, facilitating access to naturally-aligned ring buffers. Ring sizes between 2 and 32768 bytes are possible. This can apply to either read or write addresses, based on value of RING_SEL.	RW	0x0
	Enumerated values:		
	0x0 → RING_NONE		
5	**INCR_WRITE**: If 1, the write address increments with each transfer. If 0, each write is directed to the same, initial address. Generally this should be disabled for memory-to-peripheral transfers.	RW	0x0
4	**INCR_READ**: If 1, the read address increments with each transfer. If 0, each read is directed to the same, initial address. Generally this should be disabled for peripheral-to-memory transfers.	RW	0x0
3:2	**DATA_SIZE**: Set the size of each bus transfer (byte/halfword/word). READ_ADDR and WRITE_ADDR advance by this amount (1/2/4 bytes) with each transfer.	RW	0x0
	Enumerated values:		
	0x0 → SIZE_BYTE		
	0x1 → SIZE_HALFWORD		
	0x2 → SIZE_WORD		
1	**HIGH_PRIORITY**: HIGH_PRIORITY gives a channel preferential treatment in issue scheduling: in each scheduling round, all high priority channels are considered first, and then only a single low priority channel, before returning to the high priority channels. This only affects the order in which the DMA schedules channels. The DMA's bus priority is not changed. If the DMA is not saturated then a low priority channel will see no loss of throughput.	RW	0x0
0	**EN**: DMA Channel Enable. When 1, the channel will respond to triggering events, which will cause it to become BUSY and start transferring data. When 0, the channel will ignore triggers, stop issuing transfers, and pause the current transfer sequence (i.e. BUSY will remain high if already high)	RW	0x0

DMA: CH0_AL1_CTRL, CH1_AL1_CTRL, …, CH10_AL1_CTRL, CH11_AL1_CTRL Registers

Offsets: 0x010, 0x050, …, 0x290, 0x2d0

Table 125. CH0_AL1_CTRL, CH1_AL1_CTRL, ..., CH10_AL1_CTRL, CH11_AL1_CTRL Registers

Bits	Description	Type	Reset
31:0	Alias for channel *N* CTRL register	RW	-

DMA: CH0_AL1_READ_ADDR, CH1_AL1_READ_ADDR, ..., CH10_AL1_READ_ADDR, CH11_AL1_READ_ADDR Registers

Offsets: 0x014, 0x054, ..., 0x294, 0x2d4

Table 126. CH0_AL1_READ_ADDR, CH1_AL1_READ_ADDR, ..., CH10_AL1_READ_ADDR, CH11_AL1_READ_ADDR Registers

Bits	Description	Type	Reset
31:0	Alias for channel *N* READ_ADDR register	RW	-

DMA: CH0_AL1_WRITE_ADDR, CH1_AL1_WRITE_ADDR, ..., CH10_AL1_WRITE_ADDR, CH11_AL1_WRITE_ADDR Registers

Offsets: 0x018, 0x058, ..., 0x298, 0x2d8

Table 127. CH0_AL1_WRITE_ADDR, CH1_AL1_WRITE_ADDR, ..., CH10_AL1_WRITE_ADDR, CH11_AL1_WRITE_ADDR Registers

Bits	Description	Type	Reset
31:0	Alias for channel *N* WRITE_ADDR register	RW	-

DMA: CH0_AL1_TRANS_COUNT_TRIG, CH1_AL1_TRANS_COUNT_TRIG, ..., CH10_AL1_TRANS_COUNT_TRIG, CH11_AL1_TRANS_COUNT_TRIG Registers

Offsets: 0x01c, 0x05c, ..., 0x29c, 0x2dc

Table 128. CH0_AL1_TRANS_COUNT_TRIG, CH1_AL1_TRANS_COUNT_TRIG, ..., CH10_AL1_TRANS_COUNT_TRIG, CH11_AL1_TRANS_COUNT_TRIG Registers

Bits	Description	Type	Reset
31:0	Alias for channel *N* TRANS_COUNT register This is a trigger register (0xc). Writing a nonzero value will reload the channel counter and start the channel.	RW	-

DMA: CH0_AL2_CTRL, CH1_AL2_CTRL, ..., CH10_AL2_CTRL, CH11_AL2_CTRL Registers

Offsets: 0x020, 0x060, ..., 0x2a0, 0x2e0

Table 129. CH0_AL2_CTRL, CH1_AL2_CTRL, ..., CH10_AL2_CTRL, CH11_AL2_CTRL Registers

Bits	Description	Type	Reset
31:0	Alias for channel *N* CTRL register	RW	-

DMA: CH0_AL2_TRANS_COUNT, CH1_AL2_TRANS_COUNT, ..., CH10_AL2_TRANS_COUNT, CH11_AL2_TRANS_COUNT Registers

Offsets: 0x024, 0x064, ..., 0x2a4, 0x2e4

Table 130. CH0_AL2_TRANS_COUNT, CH1_AL2_TRANS_COUNT, ..., CH10_AL2_TRANS_COUNT, CH11_AL2_TRANS_COUNT Registers

Bits	Description	Type	Reset
31:0	Alias for channel *N* TRANS_COUNT register	RW	-

DMA: CH0_AL2_READ_ADDR, CH1_AL2_READ_ADDR, ..., CH10_AL2_READ_ADDR, CH11_AL2_READ_ADDR Registers

Offsets: 0x028, 0x068, ..., 0x2a8, 0x2e8

Table 131. CH0_AL2_READ_ADDR, CH1_AL2_READ_ADDR, ..., CH10_AL2_READ_ADDR, CH11_AL2_READ_ADDR Registers

Bits	Description	Type	Reset
31:0	Alias for channel *N* READ_ADDR register	RW	-

DMA: CH0_AL2_WRITE_ADDR_TRIG, CH1_AL2_WRITE_ADDR_TRIG, ..., CH10_AL2_WRITE_ADDR_TRIG, CH11_AL2_WRITE_ADDR_TRIG Registers

Offsets: 0x02c, 0x06c, ..., 0x2ac, 0x2ec

Table 132. CH0_AL2_WRITE_ADDR_TRIG, CH1_AL2_WRITE_ADDR_TRIG, ..., CH10_AL2_WRITE_ADDR_TRIG, CH11_AL2_WRITE_ADDR_TRIG Registers

Bits	Description	Type	Reset
31:0	Alias for channel *N* WRITE_ADDR register This is a trigger register (0xc). Writing a nonzero value will reload the channel counter and start the channel.	RW	-

DMA: CH0_AL3_CTRL, CH1_AL3_CTRL, ..., CH10_AL3_CTRL, CH11_AL3_CTRL Registers

Offsets: 0x030, 0x070, ..., 0x2b0, 0x2f0

Table 133. CH0_AL3_CTRL, CH1_AL3_CTRL, ..., CH10_AL3_CTRL, CH11_AL3_CTRL Registers

Bits	Description	Type	Reset
31:0	Alias for channel *N* CTRL register	RW	-

DMA: CH0_AL3_WRITE_ADDR, CH1_AL3_WRITE_ADDR, ..., CH10_AL3_WRITE_ADDR, CH11_AL3_WRITE_ADDR Registers

Offsets: 0x034, 0x074, ..., 0x2b4, 0x2f4

Table 134. CH0_AL3_WRITE_ADDR, CH1_AL3_WRITE_ADDR, ..., CH10_AL3_WRITE_ADDR, CH11_AL3_WRITE_ADDR Registers

Bits	Description	Type	Reset
31:0	Alias for channel *N* WRITE_ADDR register	RW	-

DMA: CH0_AL3_TRANS_COUNT, CH1_AL3_TRANS_COUNT, ..., CH10_AL3_TRANS_COUNT, CH11_AL3_TRANS_COUNT Registers

Offsets: 0x038, 0x078, ..., 0x2b8, 0x2f8

Table 135. CH0_AL3_TRANS_COUNT, CH1_AL3_TRANS_COUNT, ..., CH10_AL3_TRANS_COUNT, CH11_AL3_TRANS_COUNT Registers

Bits	Description	Type	Reset
31:0	Alias for channel *N* TRANS_COUNT register	RW	-

DMA: CH0_AL3_READ_ADDR_TRIG, CH1_AL3_READ_ADDR_TRIG, ..., CH10_AL3_READ_ADDR_TRIG, CH11_AL3_READ_ADDR_TRIG Registers

Offsets: 0x03c, 0x07c, ..., 0x2bc, 0x2fc

Table 136. CH0_AL3_READ_ADDR_TRIG, CH1_AL3_READ_ADDR_TRIG, ..., CH10_AL3_READ_ADDR_TRIG, CH11_AL3_READ_ADDR_TRIG Registers

Bits	Description	Type	Reset
31:0	Alias for channel *N* READ_ADDR register This is a trigger register (0xc). Writing a nonzero value will reload the channel counter and start the channel.	RW	-

DMA: INTR Register

Offset: 0x400

Description

Interrupt Status (raw)

Table 137. INTR Register

Bits	Description	Type	Reset
31:16	Reserved.	-	-
15:0	Raw interrupt status for DMA Channels 0..15. Bit n corresponds to channel n. Ignores any masking or forcing. Channel interrupts can be cleared by writing a bit mask to INTR, INTS0 or INTS1. Channel interrupts can be routed to either of two system-level IRQs based on INTE0 and INTE1. This can be used vector different channel interrupts to different ISRs: this might be done to allow NVIC IRQ preemption for more time-critical channels, or to spread IRQ load across different cores. It is also valid to ignore this behaviour and just use INTE0/INTS0/IRQ 0.	WC	0x0000

DMA: INTE0 Register

Offset: 0x404

Description

Interrupt Enables for IRQ 0

Table 138. INTE0 Register

Bits	Description	Type	Reset
31:16	Reserved.	-	-
15:0	Set bit n to pass interrupts from channel n to DMA IRQ 0.	RW	0x0000

DMA: INTF0 Register

Offset: 0x408

Description

Force Interrupts

Table 139. INTF0 Register

Bits	Description	Type	Reset
31:16	Reserved.	-	-
15:0	Write 1s to force the corresponding bits in INTE0. The interrupt remains asserted until INTF0 is cleared.	RW	0x0000

DMA: INTS0 Register

Offset: 0x40c

Description

Interrupt Status for IRQ 0

Table 140. INTS0 Register

Bits	Description	Type	Reset
31:16	Reserved.	-	-
15:0	Indicates active channel interrupt requests which are currently causing IRQ 0 to be asserted. Channel interrupts can be cleared by writing a bit mask here.	WC	0x0000

DMA: INTE1 Register

Offset: 0x414

Description

Interrupt Enables for IRQ 1

Table 141. INTE1 Register

Bits	Description	Type	Reset
31:16	Reserved.	-	-
15:0	Set bit n to pass interrupts from channel n to DMA IRQ 1.	RW	0x0000

DMA: INTF1 Register

Offset: 0x418

Description

Force Interrupts for IRQ 1

Table 142. INTF1 Register

Bits	Description	Type	Reset
31:16	Reserved.	-	-
15:0	Write 1s to force the corresponding bits in INTE0. The interrupt remains asserted until INTF0 is cleared.	RW	0x0000

DMA: INTS1 Register

Offset: 0x41c

Description

Interrupt Status (masked) for IRQ 1

Table 143. INTS1 Register

Bits	Description	Type	Reset
31:16	Reserved.	-	-
15:0	Indicates active channel interrupt requests which are currently causing IRQ 1 to be asserted. Channel interrupts can be cleared by writing a bit mask here.	WC	0x0000

DMA: TIMER0, TIMER1, TIMER2, TIMER3 Registers

Offsets: 0x420, 0x424, 0x428, 0x42c

Description

Pacing (X/Y) Fractional Timer
The pacing timer produces TREQ assertions at a rate set by ((X/Y) * sys_clk). This equation is evaluated every sys_clk cycles and therefore can only generate TREQs at a rate of 1 per sys_clk (i.e. permanent TREQ) or less.

Table 144. TIMER0, TIMER1, TIMER2, TIMER3 Registers

Bits	Description	Type	Reset
31:16	**X**: Pacing Timer Dividend. Specifies the X value for the (X/Y) fractional timer.	RW	0x0000

Bits	Description	Type	Reset
15:0	**Y**: Pacing Timer Divisor. Specifies the Y value for the (X/Y) fractional timer.	RW	0x0000

DMA: MULTI_CHAN_TRIGGER Register

Offset: 0x430

Description

Trigger one or more channels simultaneously

Table 145. MULTI_CHAN_TRIGGER Register

Bits	Description	Type	Reset
31:16	Reserved.	-	-
15:0	Each bit in this register corresponds to a DMA channel. Writing a 1 to the relevant bit is the same as writing to that channel's trigger register; the channel will start if it is currently enabled and not already busy.	SC	0x0000

DMA: SNIFF_CTRL Register

Offset: 0x434

Description

Sniffer Control

Table 146. SNIFF_CTRL Register

Bits	Description	Type	Reset
31:12	Reserved.	-	-
11	**OUT_INV**: If set, the result appears inverted (bitwise complement) when read. This does not affect the way the checksum is calculated; the result is transformed on-the-fly between the result register and the bus.	RW	0x0
10	**OUT_REV**: If set, the result appears bit-reversed when read. This does not affect the way the checksum is calculated; the result is transformed on-the-fly between the result register and the bus.	RW	0x0
9	**BSWAP**: Locally perform a byte reverse on the sniffed data, before feeding into checksum. Note that the sniff hardware is downstream of the DMA channel byteswap performed in the read master: if channel CTRL_BSWAP and SNIFF_CTRL_BSWAP are both enabled, their effects cancel from the sniffer's point of view.	RW	0x0
8:5	**CALC**	RW	0x0
	Enumerated values:		
	0x0 → CRC32: Calculate a CRC-32 (IEEE802.3 polynomial)		
	0x1 → CRC32R: Calculate a CRC-32 (IEEE802.3 polynomial) with bit reversed data		
	0x2 → CRC16: Calculate a CRC-16-CCITT		
	0x3 → CRC16R: Calculate a CRC-16-CCITT with bit reversed data		
	0xe → EVEN: XOR reduction over all data. == 1 if the total 1 population count is odd.		
	0xf → SUM: Calculate a simple 32-bit checksum (addition with a 32 bit accumulator)		

Bits	Description	Type	Reset
4:1	**DMACH**: DMA channel for Sniffer to observe	RW	0x0
0	**EN**: Enable sniffer	RW	0x0

DMA: SNIFF_DATA Register

Offset: 0x438

Description

Data accumulator for sniff hardware

Table 147. SNIFF_DATA Register

Bits	Description	Type	Reset
31:0	Write an initial seed value here before starting a DMA transfer on the channel indicated by SNIFF_CTRL_DMACH. The hardware will update this register each time it observes a read from the indicated channel. Once the channel completes, the final result can be read from this register.	RW	0x00000000

DMA: FIFO_LEVELS Register

Offset: 0x440

Description

Debug RAF, WAF, TDF levels

Table 148. FIFO_LEVELS Register

Bits	Description	Type	Reset
31:24	Reserved.	-	-
23:16	**RAF_LVL**: Current Read-Address-FIFO fill level	RO	0x00
15:8	**WAF_LVL**: Current Write-Address-FIFO fill level	RO	0x00
7:0	**TDF_LVL**: Current Transfer-Data-FIFO fill level	RO	0x00

DMA: CHAN_ABORT Register

Offset: 0x444

Description

Abort an in-progress transfer sequence on one or more channels

Table 149. CHAN_ABORT Register

Bits	Description	Type	Reset
31:16	Reserved.	-	-
15:0	Each bit corresponds to a channel. Writing a 1 aborts whatever transfer sequence is in progress on that channel. The bit will remain high until any in-flight transfers have been flushed through the address and data FIFOs. After writing, this register must be polled until it returns all-zero. Until this point, it is unsafe to restart the channel.	SC	0x0000

DMA: N_CHANNELS Register

Offset: 0x448

Table 150. N_CHANNELS Register

Bits	Description	Type	Reset
31:5	Reserved.	-	-

Bits	Description	Type	Reset
4:0	The number of channels this DMA instance is equipped with. This DMA supports up to 16 hardware channels, but can be configured with as few as one, to minimise silicon area.	RO	-

DMA: CH0_DBG_CTDREQ, CH1_DBG_CTDREQ, …, CH10_DBG_CTDREQ, CH11_DBG_CTDREQ Registers

Offsets: 0x800, 0x840, …, 0xa80, 0xac0

Table 151. CH0_DBG_CTDREQ, CH1_DBG_CTDREQ, …, CH10_DBG_CTDREQ, CH11_DBG_CTDREQ Registers

Bits	Description	Type	Reset
31:6	Reserved.	-	-
5:0	Read: get channel DREQ counter (i.e. how many accesses the DMA expects it can perform on the peripheral without overflow/underflow. Write any value: clears the counter, and cause channel to re-initiate DREQ handshake.	WC	0x00

DMA: CH0_DBG_TCR, CH1_DBG_TCR, …, CH10_DBG_TCR, CH11_DBG_TCR Registers

Offsets: 0x804, 0x844, …, 0xa84, 0xac4

Table 152. CH0_DBG_TCR, CH1_DBG_TCR, …, CH10_DBG_TCR, CH11_DBG_TCR Registers

Bits	Description	Type	Reset
31:0	Read to get channel TRANS_COUNT reload value, i.e. the length of the next transfer	RO	0x00000000

2.6. Memory

RP2040 has embedded ROM and SRAM, and access to external Flash via a QSPI interface. Details of internal memory are given below.

2.6.1. ROM

A 16kB read-only memory (ROM) is at address `0x00000000`. The ROM contents are fixed at the time the silicon is manufactured. It contains:

- Initial startup routine
- Flash boot sequence
- Flash programming routines
- USB mass storage device with UF2 support
- Utility libraries such as fast floating point

The boot sequence of the chip is defined in Section 2.8.1, and the ROM contents is described in more detail in Section 2.8. The full source code for the RP2040 bootrom is available at:

pico-bootrom

The ROM offers single-cycle read-only bus access, and is on a dedicated AHB-Lite arbiter, so it can be accessed simultaneously with other memory devices. Attempting to write to the ROM has no effect (no bus fault is generated).

2.6.2. SRAM

There is a total of 264kB of on-chip SRAM. Physically this is partitioned into six banks, as this vastly improves memory bandwidth for multiple masters, but software may treat it as a single 264kB memory region. There are no restrictions on what is stored in each bank: processor code, data buffers, or a mixture. There are four 16k x 32-bit banks (64kB each) and two 1k x 32-bit banks (4kB each).

IMPORTANT

Banking is a *physical* partitioning of SRAM which improves performance by allowing multiple simultaneous accesses. *Logically* there is a single 264kB contiguous memory.

Each SRAM bank is accessed via a dedicated AHB-Lite arbiter. This means different bus masters can access different SRAM banks in parallel, so up to four 32-bit SRAM accesses can take place every system clock cycle (one per master).

SRAM is mapped to system addresses starting at `0x20000000`. The first 256kB address region is word-striped across the four larger banks, which provides a significant memory parallelism benefits for most use cases.

Consecutive words in the system address space are routed to different RAM banks as shown in Table 153.

Table 153. SRAM bank0/1/2/3 striped mapping.

System address	SRAM Bank	SRAM word address
`0x20000000`	Bank 0	0
`0x20000004`	Bank 1	0
`0x20000008`	Bank 2	0
`0x2000000c`	Bank 3	0
`0x20000010`	Bank 0	1
`0x20000014`	Bank 1	1
`0x20000018`	Bank 2	1
`0x2000001c`	Bank 3	1
`0x20000020`	Bank 0	2
`0x20000024`	Bank 1	2
`0x20000028`	Bank 2	2
`0x2000002c`	Bank 3	2
etc		

The next two 4kB regions (starting at `0x20040000` and `0x20041000`) are mapped directly to the smaller, 4kB memory banks. Software *may* choose to use these for per-core purposes, e.g. stack and frequently-executed code, guaranteeing that the processors never stall on these accesses. However, like all SRAM on RP2040, these banks have single-cycle access from *all* masters providing no other masters are accessing the bank in the same cycle, so it is reasonable to treat memory as a single 264kB device.

The four 64kB banks are also available at a non-striped mirror. The four 64kB regions starting at `0x21000000`, `0x21010000`, `0x21020000`, `0x21030000` are each mapped directly to one of the four 64kB SRAM banks. Software can explicitly allocate data and code across the physical memory banks, for improved memory performance in exceptionally demanding cases. This is often unnecessary, as memory striping usually provides sufficient parallelism with less software complexity.

The non-striped mirror starts at an offset of +16MB above the base of SRAM, as this is the maximum offset that allows ARMv6M subroutine calls between the smaller banks and the non-striped larger banks.

2.6.2.1. Other On-chip Memory

Besides the 264kB main memory, there are two other dedicated RAM blocks that may be used in some circumstances:

- If flash XIP caching is disabled, the cache becomes available as a 16kB memory starting at `0x15000000`
- If the USB is not used, the USB data DPRAM can be used as a 4kB memory starting at `0x50100000`

This gives a total of 284kB of on-chip SRAM. There are no restrictions on how these memories are used, e.g. it is possible to execute code from the USB data RAM if you choose.

2.6.3. Flash

External Flash is accessed via the QSPI interface using the execute-in-place (XIP) hardware. This allows an external flash memory to be addressed and accessed by the system as though it were internal memory. Bus reads to a 16MB memory window starting at `0x10000000` are translated into a serial flash transfer, and the result is returned to the master that initiated the read. This process is transparent to the master, so a processor can execute code from the external flash without first copying the code to internal memory, hence "execute in place". An internal cache remembers the contents of recently-accessed flash locations, which accelerates the average bandwidth and latency of the interface.

Once correctly configured by RP2040's bootrom and the flash second stage, the XIP hardware is largely transparent, and software can treat flash as a large read-only memory. However, it does provide a number of additional features to serve more demanding software use cases.

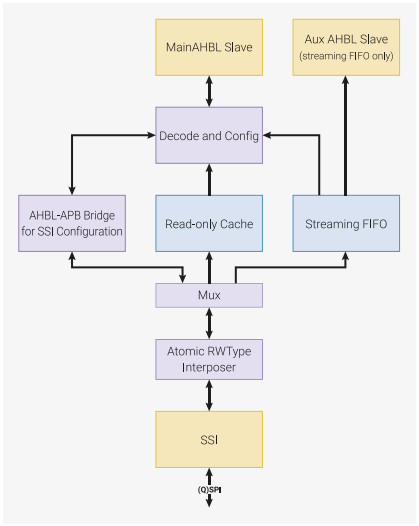

Figure 14. Flash execute-in-place (XIP) subsystem. System accesses via the main AHB-Lite slave are decoded to determine if they are XIP accesses, direct accesses to the SSI e.g. for configuration, or accesses to various other hardware and control registers in the XIP subsystem. XIP accesses are first looked up in the cache, to accelerate accesses to recently-used data. If the data is not found in the cache, an external serial access is generated via the SSI, and the resulting data is stored in the cache and forwarded on to the system bus.

NOTE

The serial flash interface is configured by the flash second stage when using the SDK to run at an integer divider of the system clock. All the included second stage boot implementations support a `PICO_FLASH_SPI_CLKDIV` setting (e.g. defaulted to 4 in https://github.com/raspberrypi/pico-sdk/blob/master/src/rp2040/boot_stage2/boot2_w25q080.S to make the default interface speed 125/4 = 31.25MHz). This divider can be overridden by specifying `PICO_FLASH_SPI_CLKDIV` in the particular board config header used with the SDK.

2.6.3.1. XIP Cache

The cache is 16kB, two way set-associative, 1 cycle hit. It is internal to the XIP subsystem, and only affects accesses to XIP flash, so software does not have to consider cache coherence, unless performing flash programming operations. It caches reads from a 24-bit flash address space, which is mirrored multiple times in the RP2040 address space, each alias having different caching behaviour. The eight MSBs of the system address are used for segment decode, leaving 24 bits for flash addressing, so the maximum supported flash size (for XIP operation) is 16MB. The available mirrors

are:

- 0x10··· XIP access, cacheable, allocating - Normal cache operation
- 0x11··· XIP access, cacheable, non-allocating - Check for hit, don't update cache on miss
- 0x12··· XIP access, non-cacheable, allocating - Don't check for hit, always update cache
- 0x13··· XIP access, non-cacheable, non-allocating - Bypass cache completely
- 0x15··· Use XIP cache as SRAM bank, mirrored across entire segment

If the cache is disabled, via the CTRL.EN register bit, then all four of the XIP aliases (0x10 to 0x13) will bypass the cache, and access the flash directly. This has a significant impact on XIP code execution performance.

Access to the 0x15··· segment produces a bus error unless the cache is disabled by clearing CTRL.EN. Once the cache is disabled, this region behaves as an additional 16kB SRAM bank. Reads and writes are one cycle, but there is a wait state on consecutive write-read sequences, i.e. there is no write forwarding buffer.

2.6.3.2. Cache Flushing and Maintenance

The FLUSH register allows the entire cache contents to be flushed. This is necessary if software has reprogrammed the flash contents, and needs to clear out stale data and code, without performing a reboot. Cache flushes are triggered either manually by writing 1 to FLUSH, or automatically when the XIP block is brought out of reset. The flush is implemented by zeroing the cache tag memory using an internal counter, which takes just over 1024 clock cycles (16kB total size / 8 bytes per line / 2 ways per set).

Flushing the cache whilst accessing flash data (perhaps initiating the flush on one core whilst another core may be executing code from flash) is a safe operation, but any master accessing flash data while the flush is in progress will be stalled until completion.

CAUTION

The cache-as-SRAM alias (0x15···) must not be written whilst a cache flush is in progress. Before writing for the first time, if a cache flush has recently been initiated (e.g. via a watchdog reset), a dummy read from FLUSH is recommended to ensure the cache flush has completed. Writing to cache-as-SRAM whilst a flush is in progress can corrupt the data memory contents.

A complete cache flush dramatically slows subsequent code execution, until the cache "warms up" again. There is an alternative, which allows cache contents corresponding to only a certain address range to be invalidated. A write to the 0x10··· mirror will look up the addressed location in the cache, and delete any matching entry found. Writing to all word-aligned locations in an address range (e.g. a flash sector that has just been erased and reprogrammed) therefore eliminates the possibility of stale cached data in this range, without suffering the effects of a complete cache flush.

Pico Examples: https://github.com/raspberrypi/pico-examples/blob/master/flash/cache_perfctr/flash_cache_perfctr.c Lines 30 - 55

```
30     // Flush cache to make sure we miss the first time we access test_data
31     xip_ctrl_hw->flush = 1;
32     while (!(xip_ctrl_hw->stat & XIP_STAT_FLUSH_READY_BITS))
33         tight_loop_contents();
34
35     // Clear counters (write any value to clear)
36     xip_ctrl_hw->ctr_acc = 1;
37     xip_ctrl_hw->ctr_hit = 1;
38
39     (void) *test_data_ptr;
40     check(xip_ctrl_hw->ctr_hit == 0 && xip_ctrl_hw->ctr_acc == 1,
41           "First access to data should miss");
42
43     (void) *test_data_ptr;
44     check(xip_ctrl_hw->ctr_hit == 1 && xip_ctrl_hw->ctr_acc == 2,
```

```
45          "Second access to data should hit");
46
47      // Write to invalidate individual cache lines (64 bits)
48      // Writes must be directed to the cacheable, allocatable alias (address 0x10..._....)
49      *test_data_ptr = 0;
50      (void) *test_data_ptr;
51      check(xip_ctrl_hw->ctr_hit == 1 && xip_ctrl_hw->ctr_acc == 3,
52            "Should miss after invalidation");
53      (void) *test_data_ptr;
54      check(xip_ctrl_hw->ctr_hit == 2 && xip_ctrl_hw->ctr_acc == 4,
55            "Second access after invalidation should hit again");
```

2.6.3.3. SSI

The execute-in-place functionality is provided by the SSI interface, documented in Section 4.10. It supports 1, 2 or 4-bit SPI flash interfaces (SPI, DSPI and QSPI), and can insert either an instruction prefix or mode continuation bits on each XIP access. This includes the possibility of issuing a standard `03h` serial flash read command for each access, allowing virtually any serial flash device to be used. The maximum SPI clock frequency is half the system clock frequency.

The SSI can also be used as a standard FIFO-based SPI master, with DMA support. This mode is used by the bootrom to extract the second stage bootloader from external flash (see Section 2.8.1). The bus interposer allows an atomic set, clear or XOR operation to be posted to SSI control registers, in the same manner as other memory-mapped IO on RP2040. This is described in more detail in Section 2.1.2.

2.6.3.4. Flash Streaming and Auxiliary Bus Slave

As the flash is generally much larger than SRAM, it's often useful to stream chunks of data into memory from flash. It's convenient to have the DMA stream this data in the background while software in the foreground is doing other things, and it's even more convenient if code can continue to execute from flash whilst this takes place.

This doesn't interact well with standard XIP operation, because of the lengthy bus stalls forced on the DMA whilst the SSI is performing serial transfers. These stalls are tolerable for a processor, because an in-order processor tends to have nothing better to do while waiting for an instruction fetch to retire, and because typical code execution tends to have much higher cache hit rates than bulk streaming of infrequently accessed data. In contrast, stalling the DMA prevents any *other* active DMA channels from making progress during this time, which slows overall DMA throughput.

The `STREAM_ADDR` and `STREAM_CTR` registers are used to program a linear sequence of flash reads, which the XIP subsystem will perform in the background in a best-effort fashion. To minimise impact on code being executed from flash whilst the stream is ongoing, the streaming hardware has lower priority access to the SSI than regular XIP accesses, and there is a brief cooldown (seven cycles) between the last XIP cache miss and resuming streaming. This helps to avoid increase in initial access latency on XIP cache miss.

Pico Examples: https://github.com/raspberrypi/pico-examples/blob/master/flash/xip_stream/flash_xip_stream.c Lines 45 - 48

```
45      while (!(xip_ctrl_hw->stat & XIP_STAT_FIFO_EMPTY))
46          (void) xip_ctrl_hw->stream_fifo;
47      xip_ctrl_hw->stream_addr = (uint32_t) &random_test_data[0];
48      xip_ctrl_hw->stream_ctr = count_of(random_test_data);
```

The streamed data is pushed to a small FIFO, which generates DREQ signals, telling the DMA to collect the streamed data. As the DMA does not initiate a read until *after* the data has been read from flash, the DMA is not stalled when accessing the data.

Although this scheme ensures that the data is ready in the streaming FIFO once the DREQ is asserted, the DMA can still be stalled if another master is currently stalled on the XIP slave, e.g. due to a cache miss. This is solved by the auxiliary bus slave, which is a simple bus interface providing access only to the streaming FIFO. This slave is exposed on the

FASTPERI arbiter, which services only native AHB-Lite peripherals which don't generate wait states, so the DMA will never experience stalls when accessing the FIFO at this address, assuming it has high bus priority.

Pico Examples: https://github.com/raspberrypi/pico-examples/blob/master/flash/xip_stream/flash_xip_stream.c Lines 58 - 70

```
58     const uint dma_chan = 0;
59     dma_channel_config cfg = dma_channel_get_default_config(dma_chan);
60     channel_config_set_read_increment(&cfg, false);
61     channel_config_set_write_increment(&cfg, true);
62     channel_config_set_dreq(&cfg, DREQ_XIP_STREAM);
63     dma_channel_configure(
64             dma_chan,
65             &cfg,
66             (void *) buf,                 // Write addr
67             (const void *) XIP_AUX_BASE,  // Read addr
68             count_of(random_test_data), // Transfer count
69             true                        // Start immediately!
70     );
```

2.6.3.5. Performance Counters

The XIP subsystem provides two performance counters. These are 32 bits in size, saturate upon reaching 0xffffffff, and are cleared by writing any value. They count:

1. The total number of XIP accesses, to any alias
2. The number of XIP accesses which resulted in a cache hit

For common use cases, this allows the cache hit rate to be profiled.

2.6.3.6. List of XIP Registers

The XIP registers start at a base address of 0x14000000 (defined as XIP_CTRL_BASE in SDK).

Table 154. List of XIP registers

Offset	Name	Info
0x00	CTRL	Cache control
0x04	FLUSH	Cache Flush control
0x08	STAT	Cache Status
0x0c	CTR_HIT	Cache Hit counter
0x10	CTR_ACC	Cache Access counter
0x14	STREAM_ADDR	FIFO stream address
0x18	STREAM_CTR	FIFO stream control
0x1c	STREAM_FIFO	FIFO stream data

XIP: CTRL Register

Offset: 0x00

Description

Cache control

Table 155. CTRL Register

Bits	Description	Type	Reset
31:4	Reserved.	-	-
3	**POWER_DOWN**: When 1, the cache memories are powered down. They retain state, but can not be accessed. This reduces static power dissipation. Writing 1 to this bit forces CTRL_EN to 0, i.e. the cache cannot be enabled when powered down. Cache-as-SRAM accesses will produce a bus error response when the cache is powered down.	RW	0x0
2	Reserved.	-	-
1	**ERR_BADWRITE**: When 1, writes to any alias other than 0x0 (caching, allocating) will produce a bus fault. When 0, these writes are silently ignored. In either case, writes to the 0x0 alias will deallocate on tag match, as usual.	RW	0x1
0	**EN**: When 1, enable the cache. When the cache is disabled, all XIP accesses will go straight to the flash, without querying the cache. When enabled, cacheable XIP accesses will query the cache, and the flash will not be accessed if the tag matches and the valid bit is set. If the cache is enabled, cache-as-SRAM accesses have no effect on the cache data RAM, and will produce a bus error response.	RW	0x1

XIP: FLUSH Register

Offset: 0x04

Description

Cache Flush control

Table 156. FLUSH Register

Bits	Description	Type	Reset
31:1	Reserved.	-	-
0	Write 1 to flush the cache. This clears the tag memory, but the data memory retains its contents. (This means cache-as-SRAM contents is not affected by flush or reset.) Reading will hold the bus (stall the processor) until the flush completes. Alternatively STAT can be polled until completion.	SC	0x0

XIP: STAT Register

Offset: 0x08

Description

Cache Status

Table 157. STAT Register

Bits	Description	Type	Reset
31:3	Reserved.	-	-
2	**FIFO_FULL**: When 1, indicates the XIP streaming FIFO is completely full. The streaming FIFO is 2 entries deep, so the full and empty flag allow its level to be ascertained.	RO	0x0
1	**FIFO_EMPTY**: When 1, indicates the XIP streaming FIFO is completely empty.	RO	0x1

Bits	Description	Type	Reset
0	**FLUSH_READY**: Reads as 0 while a cache flush is in progress, and 1 otherwise. The cache is flushed whenever the XIP block is reset, and also when requested via the FLUSH register.	RO	0x0

XIP: CTR_HIT Register

Offset: 0x0c

Description

Cache Hit counter

Table 158. CTR_HIT Register

Bits	Description	Type	Reset
31:0	A 32 bit saturating counter that increments upon each cache hit, i.e. when an XIP access is serviced directly from cached data. Write any value to clear.	WC	0x00000000

XIP: CTR_ACC Register

Offset: 0x10

Description

Cache Access counter

Table 159. CTR_ACC Register

Bits	Description	Type	Reset
31:0	A 32 bit saturating counter that increments upon each XIP access, whether the cache is hit or not. This includes noncacheable accesses. Write any value to clear.	WC	0x00000000

XIP: STREAM_ADDR Register

Offset: 0x14

Description

FIFO stream address

Table 160. STREAM_ADDR Register

Bits	Description	Type	Reset
31:2	The address of the next word to be streamed from flash to the streaming FIFO. Increments automatically after each flash access. Write the initial access address here before starting a streaming read.	RW	0x00000000
1:0	Reserved.	-	-

XIP: STREAM_CTR Register

Offset: 0x18

Description

FIFO stream control

Table 161. STREAM_CTR Register

Bits	Description	Type	Reset
31:22	Reserved.	-	-

Bits	Description	Type	Reset
21:0	Write a nonzero value to start a streaming read. This will then progress in the background, using flash idle cycles to transfer a linear data block from flash to the streaming FIFO. Decrements automatically (1 at a time) as the stream progresses, and halts on reaching 0. Write 0 to halt an in-progress stream, and discard any in-flight read, so that a new stream can immediately be started (after draining the FIFO and reinitialising STREAM_ADDR)	RW	0x000000

XIP: STREAM_FIFO Register

Offset: 0x1c

Description

FIFO stream data

Table 162. STREAM_FIFO Register

Bits	Description	Type	Reset
31:0	Streamed data is buffered here, for retrieval by the system DMA. This FIFO can also be accessed via the XIP_AUX slave, to avoid exposing the DMA to bus stalls caused by other XIP traffic.	RF	0x00000000

2.7. Boot Sequence

Several components of the RP2040 work together to get to a point where the processors are out of reset and able to run the bootrom (Section 2.8). The bootrom is software that is built into the chip, performing the "processor controlled" part of the boot sequence. We will refer to the steps before the processor is running as the "hardware controlled" boot sequence.

The hardware controlled boot sequence is as follows:

- Power is applied to the chip and the `RUN` pin is high. (If `RUN` is low then the chip will be held in reset.)
- The On-Chip Voltage Regulator (Section 2.10) waits until the digital core supply (DVDD) is stable
- The Power-On State Machine (Section 2.13) is started. To summarise the sequence:
  - The Ring Oscillator (Section 2.17) is started, providing a clock source to the clock generators. `clk_sys` and `clk_ref` are now running at a relatively low frequency (typically 6.5MHz).
  - The reset controller (Section 2.14), the execute-in-place hardware (Section 2.6.3), memories (Section 2.6.2 and Section 2.6.1), Bus Fabric (Section 2.1), and Processor Subsystem (Section 2.3) are taken out of reset.
  - Processor core 0 and core 1 begin to execute the bootrom (Section 2.8).

2.8. Bootrom

The Bootrom size is limited to 16kB. It contains:

- Processor core 0 initial boot sequence.
- Processor core 1 low power wait and launch protocol.
- USB MSC class-compliant bootloader with UF2 support for downloading code/data to FLASH or RAM.
- USB PICOBOOT bootloader interface for advanced management.

- Routines for programming and manipulating the external flash.
- Fast floating point library.
- Fast bit counting / manipulation functions.
- Fast memory fill / copy functions.

> **Bootrom Source Code**
>
> The full source for the RP2040 bootrom can be found at https://github.com/raspberrypi/pico-bootrom.
>
> This includes versions 1, 2 and 3 of the bootrom, which correspond to the B0, B1 and B2 silicon revisions, respectively.

2.8.1. Processor Controlled Boot Sequence

A flow diagram of the boot sequence is given in Figure 15.

Figure 15. RP2040 Boot Sequence

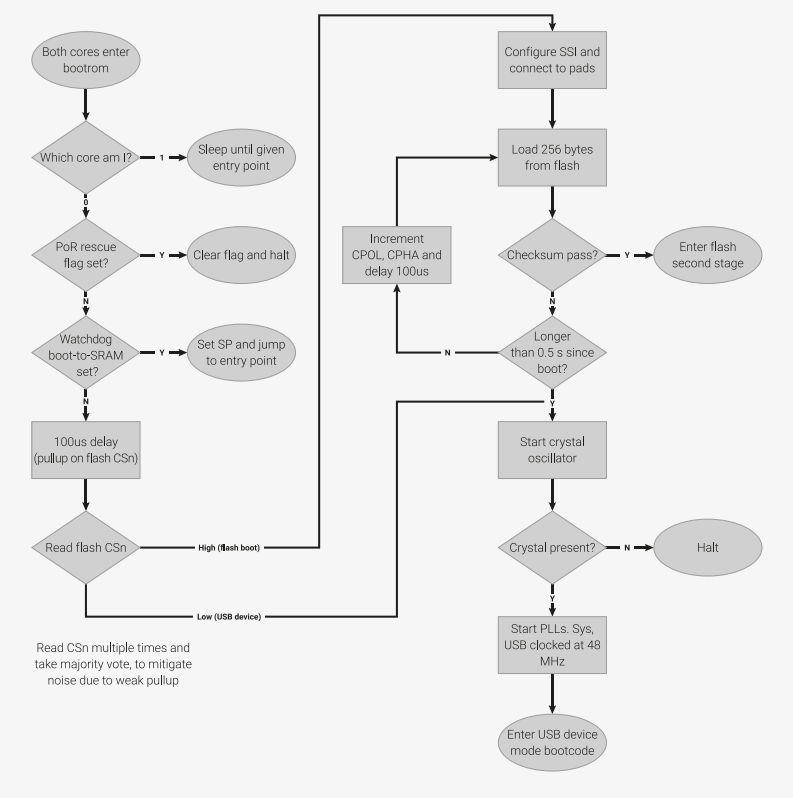

After the hardware controlled boot sequence described in Section 2.7, the processor controlled boot sequence starts:

- Reset to both processors released: both enter ROM at same location
- Processors check SIO.CPUID
  - Processor 1 goes to sleep (WFE with SCR.SLEEPDEEP enabled) and remains asleep until woken by user code, via the mailbox
  - Processor 0 continues executing from ROM
- If power up event was from Rescue DP, clear this flag and **halt immediately**
  - The debug host (which initiated the rescue) will provide further instruction.
- If watchdog scratch registers set to indicate pre-loaded code exists in SRAM, jump to that code

- Check if SPI CS pin is tied low ("bootrom button"), and skip flash boot if so.
- Set up IO muxing, pad controls on QSPI pins, and initialise Synopsys SSI for standard SPI mode
- Issue XIP exit sequence, in case flash is still in an XIP mode and has not been power-cycled
- Copy 256 bytes from SPI to internal SRAM (SRAM5) and check for valid CRC32 checksum
- If checksum passes, assume what we have loaded is a valid flash second stage
- Start executing the loaded code from SRAM (SRAM5)
- If no valid image found in SPI after 0.5 seconds of attempting to boot, drop to USB device boot
- USB device boot: appear as a USB Mass Storage Device
    - Can program the SPI flash, or load directly into SRAM and run, by dragging and dropping an image in UF2 format.
    - Also supports an extended PICOBOOT interface

2.8.1.1. Watchdog Boot

Watchdog boot allows users to install their own boot handler, and divert control away from the main boot sequence on non-POR/BOR resets. It also simplifies running code over the JTAG test interface. It recognises the following values written to the watchdog's upper scratch registers:

- Scratch 4: magic number `0xb007c0d3`
- Scratch 5: Entry point XORed with magic `-0xb007c0d3` (`0x4ff83f2d`)
- Scratch 6: Stack pointer
- Scratch 7: Entry point

If either of the magic numbers mismatch, watchdog boot does not take place. If the numbers match, the Bootrom zeroes scratch 4 before transferring control, so that the behaviour does not persist over subsequent reboots.

2.8.1.2. Flash Boot Sequence

One of the main challenges of a warm flash boot is forcing the external flash from XIP mode to a mode where it will accept standard SPI commands. There is no standard method to discontinue XIP on an unknown flash. The Bootrom provides a best-effort sequence with broad compatibility, which is as follows:

- `CSn=1`, `IO[3:0]=4'b0000` (via pull-downs to avoid contention), issue ×32 clocks
- `CSn=0`, `IO[3:0]=4'b1111` (via pull-ups to avoid contention), issue ×32 clocks
- `CSn=1`
- `CSn=0`, `MOSI=1'b1` (driven low-Z, all other IOs Hi-Z), issue ×16 clocks

This is designed to miss the XIP continuation codes on Cypress, Micron and Winbond parts. If the device is already in SPI mode, it interprets this sequence as two `FFh NOP` instructions, which should be ignored.

As this is best effort only, there may be some devices which obstinately remain in XIP mode. There are then two options:

- Use a less efficient XIP mode where each transfer has an SPI instruction prefix, so the flash device remains communicative in SPI mode.
- Boot code installs a compatible XIP exit sequence in SRAM, and configures the watchdog such that a warm boot will jump straight into this sequence, foregoing our canned sequence.

After issuing the XIP exit sequence, the Bootrom attempts to read in the second stage from flash using standard `03h` serial read commands, which are near-universally supported. Since the Bootrom is immutable, it aims for compatibility

rather than performance.

2.8.1.3. Flash Second Stage

The flash second stage must configure the SSI and the external flash for the best possible execute-in-place performance. This includes interface width, SCK frequency, SPI instruction prefix and an XIP continuation code for address-data only modes. Generally some operation can be performed on the external flash so that it does not require an instruction prefix on each access, and will simply respond to addresses with data.

Until the SSI is correctly configured for the attached flash device, it is not possible to access flash via the XIP address window. Additionally, the Synopsys SSI can not be reconfigured at all without first disabling it. Therefore the second stage must be copied from flash to SRAM by the bootrom, and executed in SRAM.

Alternatively, the second stage can simply shadow an image from external flash into SRAM, and not configure execute-in-place.

This is the **only** job of the second stage. All other chip setup (e.g. PLLs, Voltage Regulator) can be performed by platform initialisation code executed over the XIP interface, once the second stage has run.

2.8.1.3.1. Checksum

The last four bytes of the image loaded from flash (which we hope is a valid flash second stage) are a CRC32 checksum of the first 252 bytes. The parameters of the checksum are:

- Polynomial: `0x04c11db7`
- Input reflection: no
- Output reflection: no
- Initial value: `0xffffffff`
- Final XOR: `0x00000000`
- Checksum value appears as little-endian integer at end of image

The Bootrom makes 128 attempts of approximately 4ms each for a total of approximately 0.5 seconds before giving up and dropping into USB code to load and checksum the second stage with varying SPI parameters. If it sees a checksum pass it will immediately jump into the 252-byte payload which contains the flash second stage.

2.8.2. Launching Code On Processor Core 1

As described in the introduction to Section 2.8.1, after reset, processor core 1 "sleeps (WFE with SCR.SLEEPDEEP enabled) and remains asleep until woken by user code, via the mailbox".

If you are using the SDK then you can simply use the `multicore_launch_core1` function to launch code on processor core 1. However this section describes the procedure to launch code on processor core 1 yourself.

The procedure to start running on processor core 1 involves both cores moving in lockstep through a state machine coordinated by passing messages over the inter-processor FIFOs. This state machine is designed to be robust enough to cope with a recently reset processor core 1 which may be anywhere in its boot code, up to and including going to sleep. As result, the procedure may be performed at any point after processor core 1 has been reset (either by system reset, or explicitly resetting just processor core 1).

The following C code is the simplest way to describe the procedure:

```
    // values to be sent in order over the FIFO from core 0 to core 1
    //
    // vector_table is value for VTOR register
```

```
// sp is initial stack pointer (SP)
// entry is the initial program counter (PC) (don't forget to set the thumb bit!)
const uint32_t cmd_sequence[] =
        {0, 0, 1, (uintptr_t) vector_table, (uintptr_t) sp, (uintptr_t) entry};

uint seq = 0;
do {
    uint cmd = cmd_sequence[seq];
    // always drain the READ FIFO (from core 1) before sending a 0
    if (!cmd) {
        // discard data from read FIFO until empty
        multicore_fifo_drain();
        // execute a SEV as core 1 may be waiting for FIFO space
        __sev();
    }
    // write 32 bit value to write FIFO
    multicore_fifo_push_blocking(cmd);
    // read 32 bit value from read FIFO once available
    uint32_t response = multicore_fifo_pop_blocking();
    // move to next state on correct response (echo-d value) otherwise start over
    seq = cmd == response ? seq + 1 : 0;
} while (seq < count_of(cmd_sequence));
```

2.8.3. Bootrom Contents

Some of the bootrom is dedicated to the implementation of the boot sequence and USB boot interfaces. There is also code in the bootrom useful to user programs. Table 163 shows the fixed memory layout of the first handful of words in the Bootrom which are instrumental in locating other content within the bootrom.

Table 163. Bootrom contents at fixed (well known) addresses

Address	Contents	Description
`0x00000000`	32-bit pointer	Initial boot stack pointer
`0x00000004`	32-bit pointer	Pointer to boot reset handler function
`0x00000008`	32-bit pointer	Pointer to boot NMI handler function
`0x0000000c`	32-bit pointer	Pointer to boot Hard fault handler function
`0x00000010`	`'M'`, `'u'`, `0x01`	Magic
`0x00000013`	byte	Bootrom version
`0x00000014`	16-bit pointer	Pointer to a public function lookup table (`rom_func_table`)
`0x00000016`	16-bit pointer	Pointer to a public data lookup table (`rom_data_table`)
`0x00000018`	16-bit pointer	Pointer to a helper function (`rom_table_lookup()`)

2.8.3.1. Bootrom Functions

The Bootrom contains a number of public functions that provide useful RP2040 functionality that might be needed in the absence of any other code on the device, as well as highly optimized versions of certain key functionality that would otherwise have to take up space in most user binaries.

These functions are normally made available to the user by the SDK, however a lower level method is provided to locate them (their locations may change with each Bootrom release) and call them directly.

Assuming the three bytes starting at address `0x00000010` are (`'M'`, `'u'`, `0x01`) then the three halfwords starting at offset `0x00000014` are valid.

These three values can be used to dynamically locate other functions or data within the Bootrom. The version byte at offset `0x00000013` is informational and should not be used to infer the exact location of any functions.

The following code from the SDK shows how the three 16-bit pointers are used to lookup other functions or data.

SDK: https://github.com/raspberrypi/pico-sdk/blob/master/src/rp2_common/pico_bootrom/bootrom.c Lines 12 - 19

```
12 void *rom_func_lookup(uint32_t code) {
13     return rom_func_lookup_inline(code);
14 }
15
16 void *rom_data_lookup(uint32_t code) {
17     return rom_data_lookup_inline(code);
18 }
```

The `code` parameter correspond to the *CODE* values in the tables below, and is calculated as follows:

```
uint32_t rom_table_code(char c1, char c2) {
   return (c2 << 8) | c1;
}
```

2.8.3.1.1. Fast Bit Counting / Manipulation Functions

These are optimized versions of common bit counting / manipulation functions.

In general you do not need to call these methods directly as the SDK *pico_bit_ops* library replaces the corresponding standard compiler library functions by default so that the standard functions such as `__builtin_popcount` or `__clzdi2` uses the corresponding Bootrom implementations automatically (see pico_bit_ops for more details).

These functions have changed in speed slightly between version 1 (V1) of the bootrom and version 2 (V2).

Table 164. Fast Bit Counting / Manipulation Functions.

CODE	Cycles Avg V1	Cycles Avg V2/V3	Description
'P','3'	18	20	`uint32_t _popcount32(uint32_t value)`
			Return a count of the number of `1` bits in `value`.
'R','3'	21	22	`uint32_t _reverse32(uint32_t value)`
			Return the bits of `value` in the reverse order.
'L','3'	13	9.6	`uint32_t _clz32(uint32_t value)`
			Return the number of consecutive high order `0` bits of `value`. If `value` is zero, returns 32.
'T','3'	12	11	`uint32_t _ctz32(uint32_t value)`
			Return the number of consecutive low order `0` bits of `value`. If `value` is zero, returns 32.

2.8.3.1.2. Fast Bulk Memory Fill / Copy Functions

These are highly optimized bulk memory fill and copy functions commonly provided by most language runtimes.

In general you do not need to call these methods directly as the SDK *pico_mem_ops* library replaces the corresponding standard ARM EABI functions by default so that the standard C library functions e.g. `memcpy` or `memset` use the Bootrom implementations automatically (see pico_mem_ops for more details).

Table 165. Optimized Bulk Memory Fill / Copy Functions

CODE	Description
'M','S'	`uint8_t *_memset(uint8_t *ptr, uint8_t c, uint32_t n)`
	Sets `n` bytes start at `ptr` to the value `c` and returns `ptr`.
'S','4'	`uint32_t *_memset4(uint32_t *ptr, uint8_t c, uint32_t n)`
	Sets `n` bytes start at `ptr` to the value `c` and returns `ptr`. Note this is a slightly more efficient variant of `_memset` that may only be used if `ptr` is word aligned.
'M','C'	`uint8_t *_memcpy(uint8_t *dest, uint8_t *src, uint32_t n)`
	Copies `n` bytes starting at `src` to `dest` and returns `dest`. The results are undefined if the regions overlap.
'C','4'	`uint8_t *_memcpy44(uint32_t *dest, uint32_t *src, uint32_t n)`
	Copies `n` bytes starting at `src` to `dest` and returns `dest`. The results are undefined if the regions overlap. Note this is a slightly more efficient variant of `_memcpy` that may only be used if `dest` and `src` are word aligned.

2.8.3.1.3. Flash Access Functions

These are low level flash helper functions.

Table 166. Flash Access Functions

CODE	Description
'I','F'	`void _connect_internal_flash(void)`
	Restore all QSPI pad controls to their default state, and connect the SSI to the QSPI pads
'E','X'	`void _flash_exit_xip(void)`
	First set up the SSI for serial-mode operations, then issue the fixed XIP exit sequence described in Section 2.8.1.2. Note that the bootrom code uses the IO forcing logic to drive the CS pin, which must be cleared before returning the SSI to XIP mode (e.g. by a call to _flash_flush_cache). This function configures the SSI with a fixed SCK clock divisor of /6.
'R','E'	`void _flash_range_erase(uint32_t addr, size_t count, uint32_t block_size, uint8_t block_cmd)`
	Erase a `count` bytes, starting at `addr` (offset from start of flash). Optionally, pass a block erase command e.g. `D8h block erase`, and the size of the block erased by this command — this function will use the larger block erase where possible, for much higher erase speed. `addr` must be aligned to a 4096-byte sector, and `count` must be a multiple of 4096 bytes.
'R','P'	`void flash_range_program(uint32_t addr, const uint8_t *data, size_t count)`
	Program `data` to a range of flash addresses starting at `addr` (offset from the start of flash) and `count` bytes in size. `addr` must be aligned to a 256-byte boundary, and `count` must be a multiple of 256.
'F','C'	`void _flash_flush_cache(void)`
	Flush and enable the XIP cache. Also clears the IO forcing on QSPI CSn, so that the SSI can drive the flash chip select as normal.
'C','X'	`void _flash_enter_cmd_xip(void)`
	Configure the SSI to generate a standard `03h` serial read command, with 24 address bits, upon each **XIP** access. This is a very slow XIP configuration, but is very widely supported. The debugger calls this function after performing a flash erase/programming operation, so that the freshly-programmed code and data is visible to the debug host, without having to know exactly what kind of flash device is connected.

A typical call sequence for erasing a flash sector from user code would be:

- _connect_internal_flash
- _flash_exit_xip
- _flash_range_erase(addr, 1 << 12, 1 << 16, 0xd8)
- _flash_flush_cache
- Either a call to _flash_enter_cmd_xip or call into a flash second stage that was previously copied out into SRAM

Note that, in between the first and last calls in this sequence, the SSI is **not** in a state where it can handle XIP accesses, so the code that calls the intervening functions must be located in SRAM. The SDK `hardware_flash` library hides these details.

2.8.3.1.4. Debugging Support Functions

These two methods simplify the task of calling code on the device and then returning control to the debugger.

Table 167. Debugging Support Functions

CODE	Description
`'D','T'`	`_debug_trampoline`
	Simple debugger trampoline for break-on-return. This methods helps the debugger call ROM routines without setting hardware breakpoints. The function address is passed in `r7` and args are passed through `r0` … `r3` as per ABI. This method does not return but executes a `BKPT #0` at the end.
`'D','E'`	`_debug_trampoline_end`
	This is the address of the final `BKPT #0` instruction of `debug_trampoline`. This can be compared with the program counter to detect completion of the `debug_trampoline` call.

2.8.3.1.5. Miscellaneous Functions

These remaining functions don't fit in other categories and are exposed in the SDK via the *pico_bootrom* library (see pico_bootrom).

Table 168. Miscellaneous Functions

CODE	Description
`'U','B'`	`void _reset_to_usb_boot(uint32_t gpio_activity_pin_mask, uint32_t disable_interface_mask)`

	Resets the RP2040 and uses the watchdog facility to re-start in BOOTSEL mode:
	• `gpio_activity_pin_mask` is provided to enable an "activity light" via GPIO attached LED for the USB Mass Storage Device:
	  ◦ `0` No pins are used as per a cold boot.
	  ◦ Otherwise a single bit set indicating which GPIO pin should be set to output and raised whenever there is mass storage activity from the host.
	• `disable_interface_mask` may be used to control the exposed USB interfaces:
	  ◦ `0` To enable both interfaces (as per a cold boot)
	  ◦ `1` To disable the USB Mass Storage Interface (see Section 2.8.4)
	  ◦ `2` To disable the USB PICOBOOT Interface (see Section 2.8.5)

'W','V'	_wait_for_vector
	This is the method that is entered by core 1 on reset to wait to be launched by core 0. There are few cases where you should call this method (resetting core 1 is much better). This method does not return and should only ever be called on core 1.
'E','C'	deprecated
	Do not use this function which may not be present.

2.8.3.2. Fast Floating Point Library

The Bootrom contains an optimized single-precision floating point implementation. Additionally V2 onwards also contain an optimized double-precision float point implementation. The function pointers for each precision are kept in a table structure found via the rom_data_lookup table (see Section 2.8.3.3).

2.8.3.2.1. Implementation Details

There is always a trade-off between speed and size. Whilst the overall goal for the floating-point routines is to achieve good performance within a small footprint, the emphasis is more on improved performance for the basic operations (add, subtract, multiply, divide and square root) and more on reduced footprint for the scientific functions (trigonometric functions, logarithms and exponentials).

The IEEE single- and double-precision data formats are used throughout, but in the interests of reducing code size, input denormals are treated as zero, input NaNs are treated as infinities, output denormals are flushed to zero, and output NaNs are rendered as infinities. Only the round-to-nearest, even-on-tie rounding mode is supported. Traps are not supported.

The five basic operations return results that are always correctly rounded.

The scientific functions always return results within 1 ULP (unit in last place) of the exact result. In many cases results are better.

The scientific functions are calculated using internal fixed-point representations so accuracy (as measured in ULP error rather than in absolute terms) is poorer in situations where converting the result back to floating point entails a large normalising shift. This occurs, for example, when calculating the sine of a value near a multiple of pi, the cosine of a value near an odd multiple of pi/2, or the logarithm of a value near 1. Accuracy of the tangent function is also poorer when the result is very large. Although covering these cases is possible, it would add considerably to the code footprint, and there are few types of program where accuracy in these situations is essential.

The sine, cosine and tangent functions also only operate correctly over a limited range: -128 < x < +128 for single-precision arguments x and -1024 < x < +1024 for double-precision x. This is to avoid the need to (at least in effect) store the value of pi to high precision within the code, and hence saves code space. Accurate range reduction over a wider range of arguments can be done externally to the library if required, but again there are few situations where this would be needed.

NOTE

The SDK cos/sin functions perform this range reduction, so accept the full range of arguments, though are slower for inputs outside of these ranges.

2.8.3.2.2. Functions

These functions follow the standard ARM EABI for passing floating point values.

You do not need to call these methods directly as the SDK pico_float and pico_double libraries used by default replace the *ARM EABI Float functions* such that C/C++ level code (or indirectly code in languages such as *MicroPython* that are implemented in C) use these Bootrom functions automatically for the corresponding floating point operations.

Some of these functions do not behave exactly the same as some of the corresponding C library functions. For that reason if you are using the SDK it is strongly advised that you simply use the regular `math.h` functions or those in `pico/float.h` or `pico/double.h` and not try to call into the bootrom directly.

Note that double-precision floating point support is not present in version 1 (V1) of the bootrom, but the above mentioned pico_double library in the SDK will take care of pulling in any extra code needed for V1.

NOTE

For more information on using floating point in the SDK, and real world timings (noting also that some conversion functions are re-implemented in the SDK to be faster) see floating point support.

Table 169. Single-precision Floating Point Function Table. Timings are average time in us over random (worst case) input. Functions with timing of N/A are not present in that ROM version, and the function pointer should be considered invalid. The functions (and table entries) from offset 0x54 onwards are only present in the V2 ROM.

Offset	V1 Cycles (Avg)	V2/V3 Cycles (Avg)	Description
Functions common to all versions of the bootrom			
0x00	71	71	`float _fadd(float a, float b)`
			Return a + b
0x04	74	74	`float _fsub(float a, float b)`
			Return a - b
0x08	69	58	`float _fmul(float a, float b)`
			Return a * b
0x0c	71	71	`float _fdiv(float a, float b)`
			Return a / b
0x10	N/A	N/A	deprecated
			Do not use this function
0x14	N/A	N/A	deprecated
			Do not use this function
0x18	63	63	`float _fsqrt(float v)`
			Return $\sqrt{v}$ or *-Infinity* if v is negative. (Note V1 returns *+Infinity* in this case)
0x1c	37	40	`int _float2int(float v)`
			Convert a float to a signed integer, rounding towards *-Infinity*, and clamping the result to lie within the range `-0x80000000` to `0x7FFFFFFF`
0x20	36	39	`int _float2fix(float v, int n)`
			Convert a float to a signed fixed point integer representation where *n* specifies the position of the binary point in the resulting fixed point representation - e.g. `_float2fix(0.5f, 16) == 0x8000`. This method rounds towards *-Infinity*, and clamps the resulting integer to lie within the range `-0x80000000` to `0x7FFFFFFF`
0x24	38	39	`uint _float2uint(float v)`
			Convert a float to an unsigned integer, rounding towards *-Infinity*, and clamping the result to lie within the range `0x00000000` to `0xFFFFFFFF`

0x28	38	38	`uint _float2ufix(float v, int n)`
			Convert a float to an unsigned fixed point integer representation where *n* specifies the position of the binary point in the resulting fixed point representation, e.g. `_float2ufix(0.5f, 16) == 0x8000`. This method rounds towards *-Infinity*, and clamps the resulting integer to lie within the range `0x00000000` to `0xFFFFFFFF`
0x2c	55	55	`float _int2float(int v)`
			Convert a signed integer to the nearest float value, rounding to even on tie
0x30	53	53	`float _fix2float(int32_t v, int n)`
			Convert a signed fixed point integer representation to the nearest float value, rounding to even on tie. *n* specifies the position of the binary point in fixed point, so $f = nearest(v / 2^n)$
0x34	54	54	`float _uint2float(uint32_t v)`
			Convert an unsigned integer to the nearest float value, rounding to even on tie
0x38	52	52	`float _ufix2float(uint32_t v, int n)`
			Convert an unsigned fixed point integer representation to the nearest float value, rounding to even on tie. *n* specifies the position of the binary point in fixed point, so $f = nearest(v / 2^n)$
0x3c	603	587	`float _fcos(float angle)`
			Return the cosine of *angle*. *angle* is in radians, and must be in the range -128 to 128
0x40	593	577	`float _fsin(float angle)`
			Return the sine of *angle*. *angle* is in radians, and must be in the range -128 to 128
0x44	669	653	`float _ftan(float angle)`
			Return the tangent of *angle*. *angle* is in radians, and must be in the range -128 to 128
0x48	N/A	N/A	`deprecated`
			Do not use this function
0x4c	542	524	`float _fexp(float v)`
			Return the exponential value of v, i.e. so e^v
0x50	810	789	`float _fln( float v)`
			Return the natural logarithm of v. If $v <= 0$ return *-Infinity*
Functions (and table entries) present in the V2/V3 bootrom only			
0x54	N/A	25	`int _fcmp(float a, float b)`
			Compares two floating point numbers, returning: • 0 if a == b • -1 if a < b • 1 if a > b
0x58	N/A	667	`float _fatan2(float y, float x)`
			Computes the arc tangent of y/x using the signs of arguments to determine the correct quadrant

0x5c	N/A	62	`float _int642float(int64_t v)`
			Convert a signed 64-bit integer to the nearest float value, rounding to even on tie
0x60	N/A	60	`float _fix642float(int64_t v, int n)`
			Convert a signed fixed point 64-bit integer representation to the nearest float value, rounding to even on tie. *n* specifies the position of the binary point in fixed point, so $f = nearest(v / 2^n)$
0x64	N/A	58	`float _uint642float(uint64_t v)`
			Convert an unsigned 64-bit integer to the nearest float value, rounding to even on tie
0x68	N/A	57	`float _ufix642float(uint64_t v, int n)`
			Convert an unsigned fixed point 64-bit integer representation to the nearest float value, rounding to even on tie. *n* specifies the position of the binary point in fixed point, so $f = nearest(v / 2^n)$
0x6c	N/A	54	`_float2int64`
			Convert a float to a signed 64-bit integer, rounding towards *-Infinity*, and clamping the result to lie within the range `-0x8000000000000000` to `0x7FFFFFFFFFFFFFFF`
0x70	N/A	53	`_float2fix64`
			Convert a float to a signed fixed point 64-bit integer representation where *n* specifies the position of the binary point in the resulting fixed point representation - e.g. `_float2fix(0.5f, 16) == 0x8000`. This method rounds towards *-Infinity*, and clamps the resulting integer to lie within the range `-0x8000000000000000` to `0x7FFFFFFFFFFFFFFF`
0x74	N/A	42	`_float2uint64`
			Convert a float to an unsigned 64-bit integer, rounding towards *-Infinity*, and clamping the result to lie within the range `0x0000000000000000` to `0xFFFFFFFFFFFFFFFF`
0x78	N/A	41	`_float2ufix64`
			Convert a float to an unsigned fixed point 64-bit integer representation where *n* specifies the position of the binary point in the resulting fixed point representation, e.g. `_float2ufix(0.5f, 16) == 0x8000`. This method rounds towards *-Infinity*, and clamps the resulting integer to lie within the range `0x0000000000000000` to `0xFFFFFFFFFFFFFFFF`
0x7c	N/A	15	`double _float2double(float v)`
			Converts a float to a double
Function present in the V3 bootrom only			
0x48 (uses previously deprecated slot)		577 (V3 only)	float *(,float)* _fsincos(float angle)
			Calculates the sine and cosine of *angle*. *angle* is in radians, and must be in the range -128 to 128. The sine value is returned in register *r0* (and is thus the official function return value), the cosine value is returned in register *r1*. This method is considerably faster than calling `_fsin` and `_fcos` separately.

Note that the V2/V3 bootroms contains an equivalent table of functions for double-precision floating point operations. The offsets are the same, however where there was now float there is double (and vice versa for the float<>double conversion)

Table 170. Double-precision Floating Point Function Table. Timings are average time in us over random (worst case) input. Functions with timing of N/A are not present in that ROM version, and the function pointer should be considered invalid. The functions (and table entries) from offset 0x54 onwards are only present in the V2 and V3 ROMs.

Offset	Cycles (Avg)*	Description
0x00	91	`double _dadd(double a, double b)`
		Return a + b
0x04	95	`double _dsub(double a, double b)`
		Return a - b
0x08	155	`double _dmul(double a, double b)`
		Return a * b
0x0c	183	`double _ddiv(double a, double b)`
		Return a / b
0x10	N/A	deprecated
		Do not use this function
0x14	N/A	deprecated
		Do not use this function
0x18	169	`double _dsqrt(double v)`
		Return $\sqrt{v}$ or *-Infinity* if v is negative.
0x1c	75	`int _double2int(double v)`
		Convert a double to a signed integer, rounding towards *-Infinity*, and clamping the result to lie within the range `-0x80000000` to `0x7FFFFFFF`
0x20	74	`int _double2fix(double v, int n)`
		Convert a double to a signed fixed point integer representation where *n* specifies the position of the binary point in the resulting fixed point representation - e.g. `_double2fix(0.5f, 16) == 0x8000`. This method rounds towards *-Infinity*, and clamps the resulting integer to lie within the range `-0x80000000` to `0x7FFFFFFF`
0x24	63	`uint _double2uint(double v)`
		Convert a double to an unsigned integer, rounding towards *-Infinity*, and clamping the result to lie within the range `0x00000000` to `0xFFFFFFFF`
0x28	62	`uint _double2ufix(double v, int n)`
		Convert a double to an unsigned fixed point integer representation where *n* specifies the position of the binary point in the resulting fixed point representation, e.g. `_double2ufix(0.5f, 16) == 0x8000`. This method rounds towards *-Infinity*, and clamps the resulting integer to lie within the range `0x00000000` to `0xFFFFFFFF`
0x2c	69	`double _int2double(int v)`
		Convert a signed integer to the nearest double value, rounding to even on tie
0x30	68	`double _fix2double(int32_t v, int n)`
		Convert a signed fixed point integer representation to the nearest double value, rounding to even on tie. *n* specifies the position of the binary point in fixed point, so $f = nearest(v / 2^n)$
0x34	64	`double _uint2double(uint32_t v)`
		Convert an unsigned integer to the nearest double value, rounding to even on tie

Offset	Cycles (Avg)*	Description
0x38	62	`double _ufix2double(uint32_t v, int n)`
		Convert an unsigned fixed point integer representation to the nearest double value, rounding to even on tie. *n* specifies the position of the binary point in fixed point, so $f = nearest(v / 2^n)$
0x3c	1617	`double _dcos(double angle)`
		Return the cosine of *angle*. *angle* is in radians, and must be in the range -1024 to 1024
0x40	1618	`double _dsin(double angle)`
		Return the sine of *angle*. *angle* is in radians, and must be in the range -1024 to 1024
0x44	1891	`double _dtan(double angle)`
		Return the tangent of *angle*. *angle* is in radians, and must be in the range -1024 to 1024
0x48	N/A	`deprecated`
		Do not use this function
0x4c	804	`double _dexp(double v)`
		Return the exponential value of v, i.e. so e^v
0x50	428	`double _dln( double v)`
		Return the natural logarithm of v. If $v <= 0$ return *-Infinity*
0x54	39	`int _dcmp(double a, double b)`
		Compares two floating point numbers, returning: • 0 if a == b • -1 if a < b • 1 if a > b
0x58	2168	`double _datan2(double y, double x)`
		Computes the arc tangent of y/x using the signs of arguments to determine the correct quadrant
0x5c	55	`double _int642double(int64_t v)`
		Convert a signed 64-bit integer to the nearest double value, rounding to even on tie
0x60	56	`double _dix642double(int64_t v, int n)`
		Convert a signed fixed point 64-bit integer representation to the nearest double value, rounding to even on tie. *n* specifies the position of the binary point in fixed point, so $f = nearest(v / 2^n)$
0x64	50	`double _uint642double(uint64_t v)`
		Convert an unsigned 64-bit integer to the nearest double value, rounding to even on tie
0x68	49	`double _ufix642double(uint64_t v, int n)`
		Convert an unsigned fixed point 64-bit integer representation to the nearest double value, rounding to even on tie. *n* specifies the position of the binary point in fixed point, so $f = nearest(v / 2^n)$
0x6c	64	`_double2int64`
		Convert a double to a signed 64-bit integer, rounding towards *-Infinity*, and clamping the result to lie within the range `-0x8000000000000000` to `0x7FFFFFFFFFFFFFFF`

Offset	Cycles (Avg)*	Description
0x70	63	_double2fix64
		Convert a double to a signed fixed point 64-bit integer representation where *n* specifies the position of the binary point in the resulting fixed point representation - e.g. _double2fix(0.5f, 16) == 0x8000. This method rounds towards *-Infinity*, and clamps the resulting integer to lie within the range -0x8000000000000000 to 0x7FFFFFFFFFFFFFFF
0x74	53	_double2uint64
		Convert a double to an unsigned 64-bit integer, rounding towards *-Infinity*, and clamping the result to lie within the range 0x0000000000000000 to 0xFFFFFFFFFFFFFFFF
0x78	52	_double2ufix64
		Convert a double to an unsigned fixed point 64-bit integer representation where *n* specifies the position of the binary point in the resulting fixed point representation, e.g. _double2ufix(0.5f, 16) == 0x8000. This method rounds towards *-Infinity*, and clamps the resulting integer to lie within the range 0x0000000000000000 to 0xFFFFFFFFFFFFFFFF
0x7c	23	float _double2float(double v)
		Converts a double to a float
Function present in the V3 bootrom only		
0x48 (uses previously deprecated slot)	1718 (V3 only)	double (,double) _sincos(double angle)
		Calculates the sine and cosine of *angle*. *angle* is in radians, and must be in the range -1024 to 1024. The sine value is returned in registers *r0*/*r1* (and is thus the official return value), the cosine value is returned in registers *r2*/*r3*. This method is considerably faster than calling _sin and _cos separately.

2.8.3.3. Bootrom Data

The Bootrom data table (rom_data_table) contains the following pointers.

Table 171. Bootrom data pointers

CODE	Value (16-bit pointer) Description
'C','R'	const char *copyright_string
	The Raspberry Pi Trading Ltd copyright string.
'G','R'	const uint32_t *git_revision
	The 8 most significant hex digits of the Bootrom git revision.
'F','S'	fplib_start
	The start address of the floating point library code and data. This and fplib_end along with the individual function pointers in soft_float_table can be used to copy the floating point implementation into RAM if desired.
'S','F'	soft_float_table
	See Table 169 for the contents of this table.
'F','E'	fplib_end
	The end address of the floating point library code and data.

'S','D'	soft_double_table
	This entry is only present in the V2 bootrom. See Table 170 for the contents of this table.
'P','8'	*deprecated*. This entry is not present in the V2 bootrom; do not use it.
'R','8'	*deprecated*. This entry is not present in the V2 bootrom; do not use it.
'L','8'	*deprecated*. This entry is not present in the V2 bootrom; do not use it.
'T','8'	*deprecated*. This entry is not present in the V2 bootrom; do not use it.

2.8.4. USB Mass Storage Interface

The Bootrom provides a standard USB bootloader that makes a writeable drive available for copying code to the RP2040 using *UF2* files (see Section 2.8.4.2).

A *UF2* file copied to the drive is downloaded and written to Flash or RAM, and the device is automatically rebooted, making it trivial to download and run code on the RP2040 using only a USB connection.

2.8.4.1. The RPI-RP2 Drive

The RP2040 appears as a standard 128MB flash drive named *RPI-RP2* formatted as a single partition with FAT16. There are only ever two actual files visible on the drive specified.

- `INFO_UF2.TXT` - contains a string description of the UF2 bootloader and version.
- `INDEX.HTM` - redirects to information about the RP2040 device.

Any type of files may be written to the USB drive from the host, however in general these are not stored, and only *appear* to be so because of caching on the host side.

When a *UF2* file is written to the device however, the special contents are recognized and data is written to specified locations in RAM or Flash. On the completed download of an entire valid *UF2* file, the RP2040 automatically reboots to run the newly downloaded code.

NOTE

The `INDEX.HTM` file is currently redirected to https://www.raspberrypi.com/documentation/microcontrollers/

2.8.4.2. UF2 Format Details

TIP

To generate *UF2* files, use the *UF2* convert functionality in picotool.

NOTE

Invalid *UF2* files may not write at all or only write partially to RP2040 before failing. Not all operating systems notify you of disk write errors after a failed write. You can use `picotool` to verify that a *UF2* file wrote correctly to RP2040.

- All data destined for the device must be in a `UF2` block with `familyID` present and set to `0xe48bff56`, and a `payload_size` of `256`.
- All data must be destined for (and fit entirely within) the following memory ranges (depending on the type of binary being downloaded which is determined by the address of the first *UF2* block encountered):

a. A regular flash binary

   - `0x10000000-0x11000000` *Flash:* All blocks must be targeted at 256 byte alignments. Writes beyond the end of physical flash will wrap back to the beginning of flash.

b. A *RAM only* binary

   - `0x20000000-0x20042000` *Main RAM:* Blocks can be positioned with byte alignment.
   - `0x15000000-0x15004000` *Flash Cache:* (since flash is not being targeted, the Flash Cache is available for use as RAM with same properties as *Main RAM*).

NOTE

Traditionally *UF2* has only been used to write to Flash, but this is more a limitation of using the metadata-free `.BIN` file as the source to generate the *UF2* file. RP2040 takes full advantage of the inherent flexibility of *UF2* to support the full range of binaries in the richer `.ELF` format produced by the build to be used as the source for the *UF2* file.

- The `numBlocks` must specify a total size of the binary that fits in the regions specified above
- A change of `numBlocks` or the binary type (determined by *UF2* block target address) will discard the current transfer in progress.
- All data must be in blocks without the `UF2_FLAG_NOT_MAIN_FLASH` marking which relates to content to be ignored rather than Flash vs RAM.

The flash is always erased a 4kB sector at a time, so including data for only a subset of the 256-byte pages within a sector in a flash-binary UF2 will leave the remaining 256-byte pages of the sector erased but undefined. The RP2040 bootrom will accept UF2 binaries with such partially-filled sectors, however due to a bug (RP2040-E14) such binaries may not be written correctly if there is any partially-filled sector other than at the end. Most flash binaries are 4kB aligned and contiguous, and therefore it *is* usually only the last sector that is partially-filled. If you need to write non-aligned or non-contiguous UF2s to flash, then you should make sure to include a full 4kB worth of data for every sector in flash that will be written other than the last. This is handled for you automatically by the `elf2uf2` tool in the SDK version 1.3.1 onwards, which explicitly adds zero-filled pages to the appropriate *partially-filled* sectors.

A binary is considered "downloaded" when each of the `numBlocks` blocks has been seen at least once in the course of a single valid transfer. The data for a block is only written the first time in case of the host resending duplicate blocks.

After downloading a regular flash binary, a reset is performed after which the flash binary second stage (at address `0x10000000` - the start of flash) will be entered (if valid) via the bootrom.

A downloaded *RAM only* binary is entered by watchdog reset into the start of the binary, which is calculated as the lowest address of a downloaded block (with Main RAM considered lower than Flash Cache if both are present).

Finally it is possible for host software to temporarily disable *UF2* writes via the PICOBOOT interface to prevent interference with operations being performed via that interface (see below), in which case any *UF2* file write in progress will be aborted.

2.8.5. USB PICOBOOT Interface

The PICOBOOT interface is a low level USB protocol for interacting with the RP2040 while it is in BOOTSEL mode. This interface may be used concurrently with the USB Mass Storage Interface.

It provides for flexible reading from and writing to RAM or Flash, rebooting, executing code on the device and a handful of other management functions.

Constants and structures related to the interface can be found in the SDK header https://github.com/raspberrypi/pico-sdk/blob/master/src/common/boot_picoboot_headers/include/boot/picoboot.h

2.8.5.1. Identifying The Device

A RP2040 device is recognized by the *Vendor ID* and *Product ID* in its device descriptor (shown in Table 172).

Table 172. RP2040 Boot Device Descriptor

Field	Value
bLength	18
bDescriptorType	1
bcdUSB	1.10
bDeviceClass	0
bDeviceSubClass	0
bDeviceProtocol	0
bMaxPacketSize0	64
idVendor	**0x2e8a**
idProduct	**0x0003**
bcdDevice	1.00
iManufacturer	1
iProduct	2
iSerial	3
bNumConfigurations	1

2.8.5.2. Identifying The Interface

The PICOBOOT interface is recognized by the "Vendor Specific" *Interface Class* and the zero *Interface Sub Class* and *Interface Protocol* (shown in Table 173). Note that you should not rely on the interface number, as that is dependent on whether the device is also exposing the Mass Storage Interface. Note also that the device equally may not be exposing the PICOBOOT interface at all, so you should not assume it is present.

Table 173. PICOBOOT Interface Descriptor

Field	Value
bLength	9
bDescriptorType	4
bInterfaceNumber	varies
bAlternateSetting	0
bNumEndpoints	2
bInterfaceClass	**0xff (vendor specific)**
bInterfaceSubClass	**0**
bInterfaceProtocol	**0**
iInterface	0

2.8.5.3. Identifying The Endpoints

The PICOBOOT interface provides a single *BULK OUT* and a single *BULK IN* endpoint. These can be identified by their direction and type. You should not rely on endpoint numbers.

2.8.5.4. PICOBOOT Commands

The two bulk endpoints are used for sending commands and retrieved successful command results. All commands are exactly 32 bytes (see Table 174) and sent to the *BULK OUT* endpoint.

Table 174. PICOBOOT Command Definition

Offset	Name	Description
0x00	dMagic	The value `0x431fd10b`
0x04	dToken	A user provided token to identify this request by
0x08	bCmdId	The ID of the command. Note that the top bit indicates data transfer direction (0x80 = IN)
0x09	bCmdSize	Number of bytes of valid data in the *args* field
0x0a	reserved	0x0000
0x0c	dTransferLength	The number of bytes the host expects to send or receive over the bulk channel
0x10	args	16 bytes of command specific data padded with zeros

If a command sent is invalid or not recognized, the bulk endpoints will be stalled. Further information will be available via the *GET_COMMAND_STATUS* request (see Section 2.8.5.5.2).

Following the initial 32 byte packet, if *dTranferLength* is non-zero, then that many bytes are transferred over the bulk pipe and the command is completed with an empty packet in the opposite direction. If *dTransferLength* is zero then command success is indicated by an empty IN packet.

The following commands are supported (note common fields *dMagic*, *dToken*, *reserved* are omitted for clarity)

2.8.5.4.1. EXCLUSIVE_ACCESS (0x01)

Claim or release exclusive access for writing to the RP2040 over USB (versus the Mass Storage Interface)

Table 175. PICOBOOT Exclusive access command structure

Offset	Name	Value / Description	
0x08	bCmdId	0x01 (EXCLUSIVE_ACCESS)	
0x09	bCmdSize	0x01	
0x0c	dTransferLength	0x00000000	
0x10	bExclusive	NOT_EXCLUSIVE (0)	No restriction on USB Mass Storage operation
		EXCLUSIVE (1)	Disable USB Mass Storage writes (the host should see them as write protect failures, but in any case any active *UF2* download will be aborted)
		EXCLUSIVE_AND_EJECT (2)	Lock the USB Mass Storage Interface out by marking the drive media as not present (ejecting the drive)

2.8.5.4.2. REBOOT (0x02)

Reboots the RP2040 out of BOOTSEL mode. Note that BOOTSEL mode might be re-entered if rebooting to flash and no valid second stage bootloader is found.

Table 176. PICOBOOT Reboot access command structure

Offset	Name	Value / Description
0x08	bCmdId	0x02 (REBOOT)
0x09	bCmdSize	0x0c

0x0c	dTransferLength	0x00000000	
0x10	dPC	The address to start executing from. Valid values are:	
		0x00000000	Reboot via the standard Flash boot mechanism
		RAM address	Reboot via watchdog and start executing at the specified address in RAM
0x14	dSP	Initial stack pointer post reboot (only used if booting into RAM)	
0x18	dDelayMS	Number of milliseconds to delay prior to reboot	

2.8.5.4.3. FLASH_ERASE (0x03)

Erases a contiguous range of flash sectors.

Table 177. PICOBOOT Flash erase command structure

Offset	Name	Value / Description
0x08	bCmdId	0x03 (FLASH_ERASE)
0x09	bCmdSize	0x08
0x0c	dTransferLength	0x00000000
0x10	dAddr	The address in flash to erase, starting at this location. This must be sector (4kB) aligned
0x14	dSize	The number of bytes to erase. This must an exact multiple number of sectors (4kB)

2.8.5.4.4. READ (0x84)

Read a contiguous memory (Flash or RAM or ROM) range from the RP2040

Table 178. PICOBOOT Read memory command (Flash, RAM, ROM) structure

Offset	Name	Value / Description
0x08	bCmdId	0x84 (READ)
0x09	bCmdSize	0x08
0x0c	dTransferLength	Must be the same as dSize
0x10	dAddr	The address to read from. May be in Flash or RAM or ROM
0x14	dSize	The number of bytes to read

2.8.5.4.5. WRITE (0x05)

Writes a contiguous memory range of memory (Flash or RAM) on the RP2040.

Table 179. PICOBOOT Write memory command (Flash, RAM) structure

Offset	Name	Value / Description
0x08	bCmdId	0x05 (WRITE)
0x09	bCmdSize	0x08
0x0c	dTransferLength	Must be the same as dSize

Offset	Name	Value / Description
0x10	dAddr	The address to write from. May be in Flash or RAM, however must be page (256 byte) aligned if in Flash. Note the flash must be erased first or the results are undefined.
0x14	dSize	The number of bytes to write. If writing to flash and the size is not an exact multiple of pages (256 bytes) then the last page is zero-filled to the end.

2.8.5.4.6. EXIT_XIP (0x06)

Exit Flash XIP mode. This first initialises the SSI for serial transfers, and then issues the XIP exit sequence given in Section 2.8.1.2, to attempt to make the flash responsive to standard serial SPI commands. The SSI is configured with a fixed clock divisor of /6, so the USB bootloader will drive SCLK at 8MHz.

Table 180. PICOBOOT Exit Execute in place (XIP) command structure

Offset	Name	Value / Description
0x08	bCmdId	0x06 (EXIT_XIP)
0x09	bCmdSize	0x00
0x0c	dTransferLength	0x00000000

2.8.5.4.7. ENTER_XIP (0x07)

Enter Flash XIP mode. This configures the SSI to issue a standard `03h` serial read command, with 24 address clocks and 32 data clocks, for every XIP access. This is a slow but very widely supported way to read flash. The intent of this function is to make flash easily accessible (i.e. just access addresses in the `0x10`····· segment) without having to know the details of exactly what kind of flash is connected. This mode is suitable for executing code from flash, but is much slower than e.g. QSPI XIP access.

Table 181. PICOBOOT Enter Execute in place (XIP) command

Offset	Name	Value / Description
0x08	bCmdId	0x07 (ENTER_XIP)
0x09	bCmdSize	0x00
0x0c	dTransferLength	0x00000000

2.8.5.4.8. EXEC (0x08)

Executes a function on the device. This function takes no arguments and returns no results, so it must communicate via RAM. Execution of this method will block any other commands as well as Mass Storage Interface *UF2* writes, so should only be used in exclusive mode and with extreme care (and it should save and restore registers as per the ARM EABI). This method is called from a regular (non-IRQ) context, and has a very limited stack, so the function should use its own.

Table 182. PICOBOOT Execute function on device command structure

Offset	Name	Value / Description
0x08	bCmdId	0x08 (EXEC)
0x09	bCmdSize	0x04
0x0c	dTransferLength	0x00000000
0x10	dAddr	Function address to execute at (a thumb bit will be added for you since you will have forgotten).

2.8.5.4.9. VECTORIZE_FLASH (0x09)

Requests that the vector table of flash access functions used internally by the Mass Storage and PICOBOOT interfaces be copied into RAM, such that the method implementations can be replaced with custom versions (For example, if the board uses flash that does not support standard commands)

Table 183. PICOBOOT Vectorise flash command structure

Offset	Name	Value / Description
0x08	bCmdId	0x09 (VECTORIZE_FLASH)
0x09	bCmdSize	0x04
0x0c	dTransferLength	0x00000000
0x10	dAddr	Pointer to where to place vector table in RAM

Flash function vector table

```
struct {
    uint32_t size; // 28
    uint32_t (*do_flash_enter_cmd_xip)();
    uint32_t (*do_flash_exit_xip)();
    uint32_t (*do_flash_erase_sector)();
    uint32_t (*do_flash_erase_range)(uint32_t addr, uint32_t size);
    uint32_t (*do_flash_page_program)(uint32_t addr, uint8_t *data);
    uint32_t (*do_flash_page_read)(uint32_t addr, uint8_t *data);
};
```

These methods have the same signature and arguments as the corresponding flash access functions in the bootrom (see Section 2.8.3.1.3).

Note that the host must subsequently update the RAM copy of this table via an `EXEC` command running on the RP2040 as any write to RAM from the host via a PICOBOOT `WRITE` that overlaps this (now active in RAM) vector table will cause a reset to the use of the default ROM Flash function vector table.

2.8.5.5. Control Requests

The following requests are sent to the interface via the default control pipe.

2.8.5.5.1. INTERFACE_RESET (0x41)

The host sends this control request to reset the PICOBOOT interface. This command:

- Clears the HALT condition (if set) on each of the bulk endpoints
- Aborts any in-process PICOBOOT or Mass Storage transfer and any flash write (this method is the only way to kill a stuck flash transfer).
- Clears the previous command result
- Removes EXCLUSIVE_ACCESS and remounts the Mass Storage drive if it was ejected due to exclusivity.

Table 184. PICOBOOT Reset PICOBOOT interface control

bmRequestType	bRequest	wValue	wIndex	wLength	Data
01000001b	01000001b	0000h	Interface	0000h	none

This command responds with an empty packet on success.

2.8.5.5.2. GET_COMMAND_STATUS (0x42)

Retrieve the status of the last command (which may be a command still in progress). Successful completion of a PICOBOOT Protocol Command is acknowledged over the bulk pipe, however if the operation is still in progress or has failed (stalling the bulk pipe), then this method can be used to determine the operation's status.

Table 185. PICOBOOT Get last command status control

bmRequestType	bRequest	wValue	wIndex	wLength	Data
11000001b	01000010b	0000h	Interface	0000h	none

The command responds with the following 16 byte response

Table 186. PICOBOOT Get last command status control response

Offset	Name	Description	
0x00	dToken	The user token specified with the command	
0x04	dStatusCode	OK (0)	The command completed successfully (or is in still in progress)
		UNKNOWN_CMD (1)	The ID of the command was not recognized
		INVALID_CMD_LENGTH (2)	The length of the command request was incorrect
		INVALID_TRANSFER_LENGTH (3)	The data transfer length was incorrect given the command
		INVALID_ADDRESS (4)	The address specified was invalid for the command type; i.e. did not match the type Flash/RAM that the command was expecting
		BAD_ALIGNMENT (5)	The address specified was not correctly aligned according to the requirements of the command
		INTERLEAVED_WRITE (6)	A Mass Storage Interface *UF2* write has interfered with the current operation. The command was abandoned with unknown status. Note this will not happen if you have *exclusive* access.
		REBOOTING (7)	The device is in the process of rebooting, so the command has been ignored.
		UNKNOWN_ERROR (8)	Some other error occurred.
0x08	bCmdId	The ID of the command	
0x09	bInProgress	1 if the command is still in progress	0 otherwise
0x0a	reserved	(6 zero bytes)	

2.9. Power Supplies

RP2040 requires five separate power supplies. However, in most applications, several of these can be combined and connected to a single power source. In a typical application, only a single 3.3V supply will be required. See Section 2.9.7.1, "Single 3.3V Supply".

The power supplies and a number of potential power supply schemes are described in the following sections. Detailed power supply parameters are provided in Section 5.6, "Power Supplies".

2.9.1. Digital IO Supply (IOVDD)

IOVDD supplies the chip's digital IO, and should be powered at a nominal voltage between 1.8V and 3.3V. The supply voltage sets the external signal level for the digital IO and should be chosen based on the signal level required. See Section 5.5.3, "Pin Specifications" for details. All digital IOs share the same power supply and operate at the same signal level.

IOVDD should be decoupled with a 100nF capacitor close to each of the chip's IOVDD pins.

CAUTION

If the digital IO is powered at a nominal 1.8V, the IO input thresholds should be adjusted via the VOLTAGE_SELECT register. By default, the IO input thresholds are valid when the digital IO is powered at a nominal voltage between 2.5V and 3.3V. See Section 2.19, "GPIO" for details. Powering the IO at 1.8V with input thresholds set for a 2.5V to 3.3V supply is a safe operating mode, but will result in input thresholds that do not meet specification. Powering the IO at voltages greater than a nominal 1.8V with input thresholds set for a 1.8V supply may result in damage to the chip.

2.9.2. Digital Core Supply (DVDD)

DVDD supplies the chip's core digital logic, and should be powered at a nominal 1.1V. A dedicated on-chip voltage regulator is provided to allow DVDD to be generated from the digital IO supply (IOVDD) or another nominally 1.8V to 3.3V supply. The connection between the output pin of the on-chip regulator (VREG_VOUT) and the DVDD supply pins is made off-chip, allowing DVDD to be powered from an off-chip power source if required.

DVDD should be decoupled with a 100nF capacitor close to each of the chip's DVDD pins.

2.9.3. On-Chip Voltage Regulator Input Supply (VREG_VIN)

VREG_VIN is the input supply for the on-chip voltage regulator. It should be powered at a nominal voltage between 1.8V and 3.3V. To reduce the number of external power supplies, VREG_VIN can use the same power source as the digital IO supply (IOVDD).

A 1µF capacitor should be connected between VREG_VIN and ground close to the chip's VREG_VIN pin.

CAUTION

VREG_VIN also powers the chip's power-on reset and brown-out detection blocks, so it must be powered even if the on-chip voltage regulator is not used.

For more details on the on-chip voltage regulator see Section 2.10, "Core Supply Regulator".

2.9.4. USB PHY Supply (USB_VDD)

USB_VDD supplies the chip's USB PHY, and should be powered at a nominal 3.3V. To reduce the number of external power supplies, USB_VDD can use the same power source as the digital IO supply (IOVDD), assuming IOVDD is also powered at 3.3V. If IOVDD is not powered at 3.3V, a separate 3.3V supply will be required for the USB PHY, see Section 2.9.7.3, "1.8V Digital IO with Functional USB and ADC". In applications where the USB PHY is never used, USB_VDD can be tied to any supply with a nominal voltage between 1.8V and 3.3V. See Section 2.9.7.4, "Single 1.8V Supply" for an example. USB_VDD should not be left unconnected.

USB_VDD should be decoupled with a 100nF capacitor close to the chip's USB_VDD pin.

2.9.5. ADC Supply (ADC_AVDD)

ADC_AVDD supplies the chip's Analogue to Digital Converter (ADC). It can be powered at a nominal voltage between 1.8V and 3.3V, but the performance of the ADC will be compromised at voltages below 2.97V. To reduce the number of external power supplies, ADC_AVDD can use from the same power source as the digital IO supply (IOVDD).

NOTE

It is safe to supply ADC_AVDD at a higher or lower voltage than IOVDD, e.g. to power the ADC at 3.3V, for optimum performance, while supporting 1.8V signal levels on the digital IO. But the voltage on the ADC analogue inputs must not exceed IOVDD, e.g. if IOVDD is powered at 1.8V, the voltage on the ADC inputs should be limited to 1.8V. Voltages greater than IOVDD will result in leakage currents through the ESD protection diodes. See Section 5.5.3, "Pin Specifications" for details.

ADC_AVDD should be decoupled with a 100nF capacitor close to the chip's ADC_AVDD pin.

2.9.6. Power Supply Sequencing

RP2040's power supplies may be powered up or down in any order. However, small transient currents may flow in the ADC supply (ADC_AVDD) if it is powered up before, or powered down after, the digital core supply (DVDD). This will not damage the chip, but can be avoided by powering up DVDD before or at the same time as ADC_AVDD, and powering down DVDD after or at the same time as ADC_AVDD. In the most common power supply scheme, where the chip is powered from a single 3.3V supply, DVDD will be powered up shortly after ADC_AVDD due to the startup time of the on-chip voltage regulator. This is acceptable behaviour. See Section 2.9.7.1, "Single 3.3V Supply".

2.9.7. Power Supply Schemes

2.9.7.1. Single 3.3V Supply

In most applications, RP2040 will be powered from a single 3.3V supply, as shown in Figure 16. The digital IO (IOVDD), USB PHY (USB_VDD) and ADC (ADC_AVDD) will be powered directly from the 3.3V supply, and the 1.1V digital core supply (DVDD) will be regulated from the 3.3V supply by the on-chip voltage regulator. Note that the regulator output pin (VREG_VOUT) must be connected to the chip's DVDD pins off-chip.

For more details on the on-chip voltage regulator see Section 2.10, "Core Supply Regulator".

Figure 16. powering the chip from a single 3.3V supply (simplified diagram omitting decoupling components)

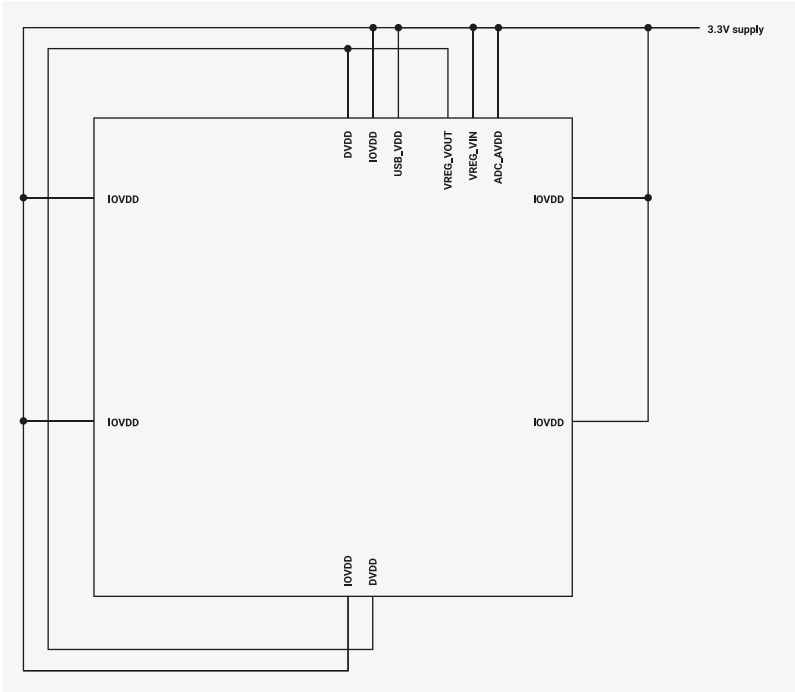

2.9.7.2. External Core Supply

The digital core (DVDD) can be powered directly from an external 1.1V supply, rather than from the on-chip regulator, as shown in Figure 17. This approach may make sense if a suitable external regulator is available elsewhere in the system, or for low power applications where an efficient switched-mode regulator could be used instead of the less efficient linear on-chip voltage regulator.

If an external core supply is used, the output of on-chip voltage regulator (VREG_VOUT) should be left unconnected. However, power must still be provided to the regulator input (VREG_VIN) to supply the chip's power-on reset and brown-out detection blocks. The on-chip voltage regulator will power-on as soon as VREG_VIN is available, but can be shutdown under software control once the chip is out of reset. See Section 2.10, "Core Supply Regulator" for details.

Figure 17. using an external core supply

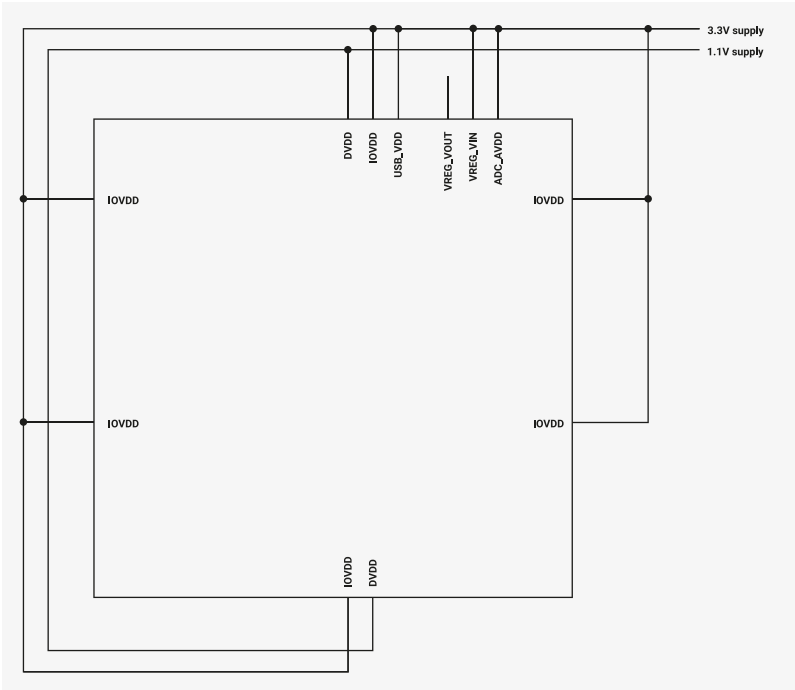

2.9.7.3. 1.8V Digital IO with Functional USB and ADC

Applications with digital IO signal levels less than 3.3V will require a separate 3.3V supply for the USB PHY and ADC, as the USB PHY does not meet specification at voltages below 3.135V and ADC performance is compromised at voltages below 2.97V. Figure 18 shows an example application with the digital IO (IOVDD) powered at 1.8V and a separate 3.3V supply for the USB PHY (USB_VDD) and ADC (ADC_AVDD). In this example, the voltage regulator input (VREG_VIN) is connected to the 1.8V supply, though it could equally have been connected to the 3.3V supply. Connecting it to the 1.8V supply will reduce overall power consumption if the 1.8V supply is generated by an efficient switched-mode regulator.

Figure 18. supporting 1.8V IO while using USB and the ADC

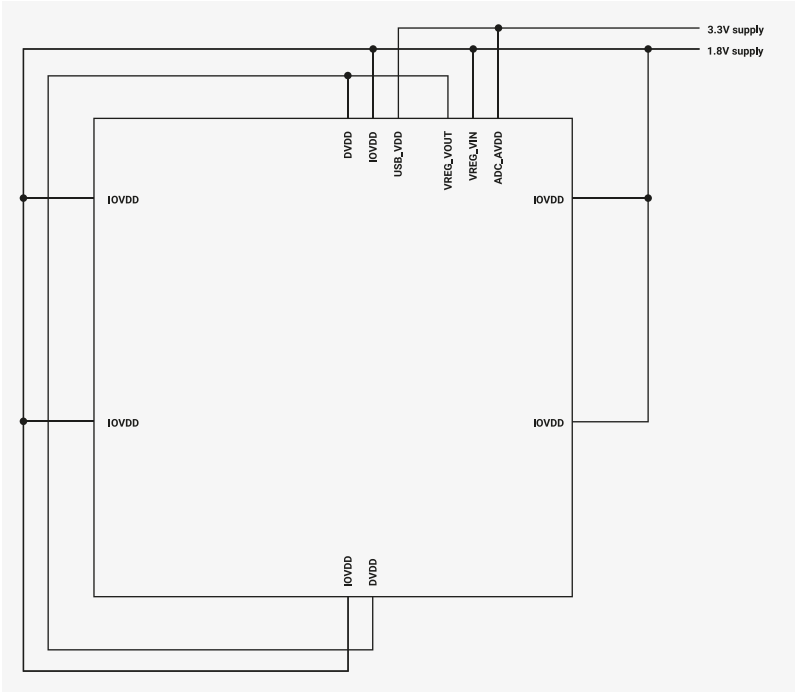

2.9.7.4. Single 1.8V Supply

If a functional USB PHY and optimum ADC performance are not required, RP2040 can be powered from a single supply of less than 3.3V. Figure 19 shows an example with a single 1.8V supply. In this example, the core supply (DVDD) is regulated from the 1.8V supply by the on-chip voltage regulator.

Figure 19. powering the chip from a single 1.8V supply

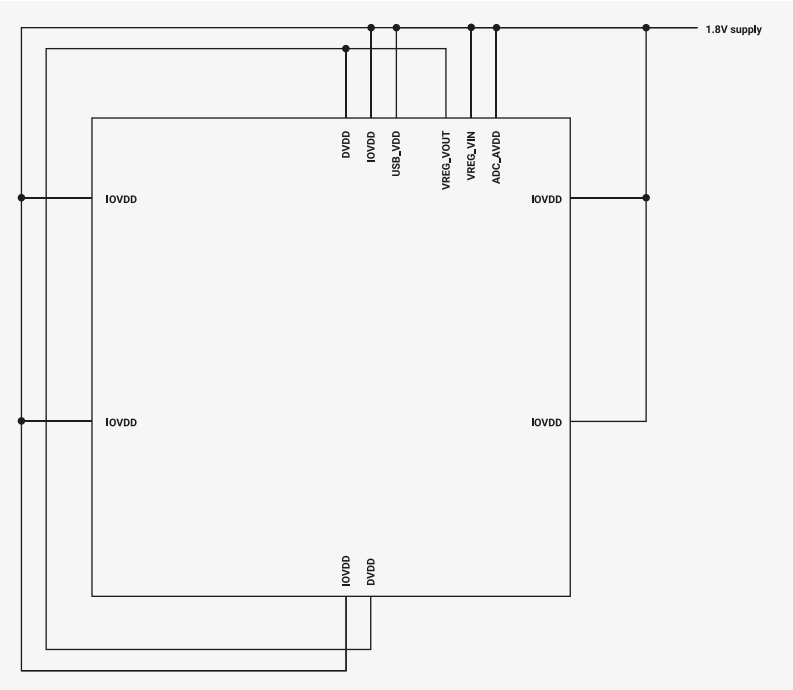

2.10. Core Supply Regulator

RP2040 includes an on-chip voltage regulator, allowing the digital core supply (DVDD) to be generated from an external, nominally 1.8V to 3.3V, power supply. In most cases, the regulator's input supply will share an external power source with the chip's digital IO supply IOVDD, simplifying the overall power supply requirements.

To allow the chip to start up, the voltage regulator is enabled by default and will power-on as soon as its input supply is available. Once the chip is out of reset, the regulator can be disabled, placed into a high impedance state, or have its output voltage adjusted, under software control. The output voltage can be set in the range 0.80V to 1.30V in 50mV steps, but is set to a nominal 1.1V at initial power-on, or after a reset event. The voltage regulator can supply up to 100mA.

Although intended to provide the chip's digital core supply (DVDD), the voltage regulator can be used for other purposes if DVDD is powered directly from an external power supply.

2.10.1. Application Circuit

Figure 20. voltage regulator application circuit

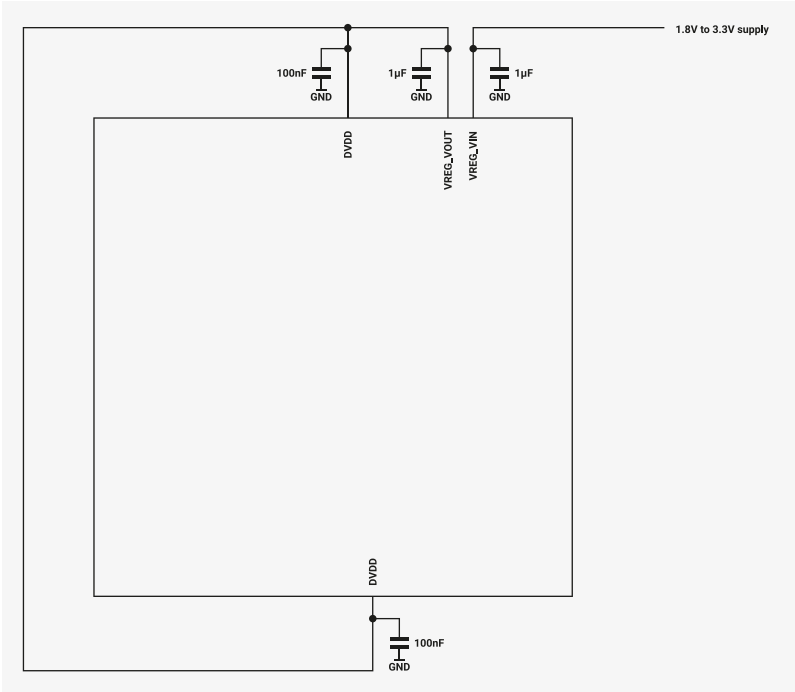

The regulator must have 1µF capacitors placed close to its input (VREG_VIN) and output (VREG_VOUT) pins.

2.10.2. Operating Modes

The voltage regulator operates in one of three modes. The mode to be used being selected by writing to the `EN` and `HIZ` fields in the VREG register, as shown in Table 187. At initial power-on, or following a reset event, the voltage regulator will be in *Normal Operation* mode.

Table 187. Voltage Regulator Mode Select

Mode	EN	HIZ
Normal Operation[a]	1	0
High Impedance	1	1
Shutdown	0	X

[a] the voltage regulator will be in normal mode at initial power-on or following a reset event

2.10.2.1. Normal Operation Mode

In Normal Operation mode, the voltage regulator's output is in regulation at the selected voltage, and the regulator is able to supply power.

2.10.2.2. High Impedance Mode

In High Impedance mode, the voltage regulator is disabled and its output pin (VREG_VOUT) is set to a high impedance state. In this mode, the regulator's power consumption is minimised. This mode allows a load connected to VREG_VOUT to be powered from a power source other than the on-chip regulator. This could allow, for example, the load to be initially powered from the on-chip voltage regulator, and then switched to an external regulator under software control. The external regulator would also need to support a high impedance mode, with only one regulator supplying the load at a time. The supply voltage is maintained by the regulator's output capacitor during the brief period when both regulators are in high impedance mode.

2.10.2.3. Shutdown Mode

In Shutdown mode, the voltage regulator is disabled, power consumption is minimized and the regulator's output pin (VREG_VOUT) is pulled to 0V.

Shutdown mode is only useful if the voltage regulator is not providing the RP2040's digital core supply (DVDD). If the regulator is supplying DVDD, and brown-out detection is enabled, entering shutdown mode will cause a reset event and the voltage regulator will return to normal mode. If brown-out detection isn't enabled, the voltage regulator will shut down and will remain in shutdown mode until its input supply (VREG_VIN) is power cycled.

2.10.3. Output Voltage Select

The required output voltage can be selected by writing to the VSEL field in the VREG register. The voltage regulator's output voltage can be set in the range 0.80V to 1.30V in 50mV intervals. The regulator output voltage is set to 1.1V at initial power-on or following a reset event. For details, see the VREG register description.

Note that RP2040 may not operate reliably with its digital core supply (DVDD) outside of operating conditions (see Section 5.6); it is recommended to set the regulator to 1.10V for most applications.

2.10.4. Status

The VREG register contains a single status field, ROK, which indicates whether the voltage regulator's output is being correctly regulated.

At power on, ROK remains low until the regulator has started up and the output voltage reaches the ROK assertion threshold ($ROK_{TH.ASSERT}$). It then remains high until the voltage drops below the ROK deassertion threshold ($ROK_{TH.DEASSERT}$), remaining low until the output voltage is above the assertion threshold again. $ROK_{TH.ASSERT}$ is nominally 90% of the selected output voltage, 0.99V if the selected output voltage is 1.1V, and $ROK_{TH.DEASSERT}$ is nominally 87% of the selected output voltage, 0.957V if the selected output voltage is 1.1V.

Note that adjusting the output voltage to a higher voltage will cause ROK to go low until the assertion threshold for the higher voltage is reached. ROK will also go low if the regulator is placed in high impedance mode.

2.10.5. Current Limit

The voltage regulator includes a current limit to prevent the load current exceeding the maximum rated value. The output voltage will not be regulated and will drop below the selected value when the current limit is active.

2.10.6. List of Registers

The voltage regulator shares a register address space with the chip-level reset subsystem. The registers for both subsystems are listed here. Only, the VREG register is part of the voltage register subsystem. The BOD and CHIP_RESET registers are part of the chip-level reset subsystem. The shared address space is referred to as vreg_and_chip_reset elsewhere in this document.

The VREG_AND_CHIP_RESET registers start at a base address of 0x40064000 (defined as VREG_AND_CHIP_RESET_BASE in SDK).

Table 188. List of VREG_AND_CHIP_RESET registers

Offset	Name	Info
0x0	VREG	Voltage regulator control and status
0x4	BOD	brown-out detection control
0x8	CHIP_RESET	Chip reset control and status

VREG_AND_CHIP_RESET: VREG Register

Offset: 0x0

Description

Voltage regulator control and status

Table 189. VREG Register

Bits	Description	Type	Reset
31:13	Reserved.	-	-
12	**ROK**: regulation status 0=not in regulation, 1=in regulation	RO	0x0
11:8	Reserved.	-	-
7:4	**VSEL**: output voltage select 0000 to 0101 - 0.80V 0110 - 0.85V 0111 - 0.90V 1000 - 0.95V 1001 - 1.00V 1010 - 1.05V 1011 - 1.10V (default) 1100 - 1.15V 1101 - 1.20V 1110 - 1.25V 1111 - 1.30V	RW	0xb
3:2	Reserved.	-	-
1	**HIZ**: high impedance mode select 0=not in high impedance mode, 1=in high impedance mode	RW	0x0
0	**EN**: enable 0=not enabled, 1=enabled	RW	0x1

VREG_AND_CHIP_RESET: BOD Register

Offset: 0x4

Description

brown-out detection control

Table 190. BOD Register

Bits	Description	Type	Reset
31:8	Reserved.	-	-

Bits	Description	Type	Reset
7:4	**VSEL**: threshold select 0000 - 0.473V 0001 - 0.516V 0010 - 0.559V 0011 - 0.602V 0100 - 0.645V 0101 - 0.688V 0110 - 0.731V 0111 - 0.774V 1000 - 0.817V 1001 - 0.860V (default) 1010 - 0.903V 1011 - 0.946V 1100 - 0.989V 1101 - 1.032V 1110 - 1.075V 1111 - 1.118V	RW	0x9
3:1	Reserved.	-	-
0	**EN**: enable 0=not enabled, 1=enabled	RW	0x1

VREG_AND_CHIP_RESET: CHIP_RESET Register

Offset: 0x8

Description

Chip reset control and status

Table 191. CHIP_RESET Register

Bits	Description	Type	Reset
31:25	Reserved.	-	-
24	**PSM_RESTART_FLAG**: This is set by psm_restart from the debugger. Its purpose is to branch bootcode to a safe mode when the debugger has issued a psm_restart in order to recover from a boot lock-up. In the safe mode the debugger can repair the boot code, clear this flag then reboot the processor.	WC	0x0
23:21	Reserved.	-	-
20	**HAD_PSM_RESTART**: Last reset was from the debug port	RO	0x0
19:17	Reserved.	-	-
16	**HAD_RUN**: Last reset was from the RUN pin	RO	0x0
15:9	Reserved.	-	-
8	**HAD_POR**: Last reset was from the power-on reset or brown-out detection blocks	RO	0x0
7:0	Reserved.	-	-

2.10.7. Detailed Specifications

Table 192. Voltage Regulator Detailed Specifications

Parameter	Description	Min	Typ	Max	Units
V_{VREG_VIN}	input supply voltage	1.63	1.8 - 3.3	3.63	V
ΔV_{VREG_VOUT}	output voltage variation	-3		+3	% of selected output voltage
I_{MAX}	output current			100	mA
I_{LIMIT}	current limit	150	350	450	mA
$ROK_{TH.ASSERT}$	ROK assertion threshold	87	90	93	% of selected output voltage
$ROK_{TH.DEASSERT}$	ROK deassertion threshold	84	87	90	% of selected output voltage
$t_{POWER-ON}$[a]	power-up time		275	350	µs

[a] values will vary with load current and capacitance on VREG_VOUT. Conditions: EN = 1, load current = 0mA, VREG_VIN ramps up in 100µs

2.11. Power Control

RP2040 provides a range of options for reducing dynamic power:

- Top-level clock gating of individual peripherals and functional blocks
- Automatic control of top-level clock gates based on processor sleep state
- On-the-fly changes to system clock frequency or system clock source (e.g. switch to internal ring oscillator, and disable PLLs and crystal oscillator)
- Zero-dynamic-power DORMANT state, waking on GPIO event or RTC IRQ

All digital logic on RP2040 is in a single core power domain. The following options are available for static power reduction:

- Placing memories into state-retaining power down state
- Power gating on peripherals that support this, e.g. ADC, temperature sensor

2.11.1. Top-level Clock Gates

Each clock domain (for example, the system clock) may drive a large number of distinct hardware blocks, not all of which may be required at once. To avoid unnecessary power dissipation, each individual endpoint of each clock (for example, the UART system clock input) may be disabled at any time.

Enabling and disabling a clock gate is glitch-free. If a peripheral clock is temporarily disabled, and subsequently re-enabled, the peripheral will be in the same state as prior to the clock being disabled. No reset or reinitialisation should be required.

Clock gates are controlled by two sets of registers: the WAKE_ENx registers (starting at WAKE_EN0) and SLEEP_ENx registers (starting at SLEEP_EN0). These two sets of registers are identical at the bit level, each possessing a flag to control each clock endpoint. The WAKE_EN registers specify which clocks are enabled whilst the system is awake, and the SLEEP_ENx registers select which clocks are enabled while the processor is in the SLEEP state (Section 2.11.2).

The two Cortex-M0+ processors do not have externally-controllable clock gates. Instead, the processors gate the clocks of their subsystems autonomously, based on execution of `WFI`/`WFE` instructions, and external Event and IRQ signals.

2.11.2. SLEEP State

RP2040 enters the SLEEP state when all of the following are true:

- Both processors are asleep (e.g. in a `WFE` or `WFI` instruction)
- The system DMA has no outstanding transfers on any channel

RP2040 exits the SLEEP state when either processor is awoken by an interrupt.

When in the SLEEP state, the top-level clock gates are masked by the SLEEP_ENx registers (starting at SLEEP_EN0), rather than the WAKE_ENx registers. This permits more aggressive pruning of the clock tree when the processors are asleep.

NOTE

Though it is possible for a clock to be enabled during SLEEP and disabled outside of SLEEP, this is generally not useful

For example, if the system is sleeping until a character interrupt from a UART, the entire system except for the UART can be clock-gated (SLEEP_ENx = all-zeroes except for CLK_SYS_UART0 and CLK_PERI_UART0). This includes system infrastructure such as the bus fabric.

When the UART asserts its interrupt, and wakes a processor, RP2040 leaves SLEEP mode, and switches back to the WAKE_ENx clock mask. At the minimum this should include the bus fabric, and the memory devices containing the processor's stack and interrupt vectors.

A system-level clock request handshake holds the processors off the bus until the clocks are re-enabled.

2.11.3. DORMANT State

The DORMANT state is a true zero-dynamic-power sleep state, where all clocks (and all oscillators) are disabled. The system can awake from the DORMANT state upon a GPIO event (high/low level or rising/falling edge), or an RTC interrupt: this restarts one of the oscillators (either ring oscillator or crystal oscillator), and ungates the oscillator output once it is stable. System state is retained, so code execution resumes immediately upon leaving the DORMANT state.

Note that, if relying on the RTC (Section 4.8) to wake from the DORMANT state, the RTC must have some external clock source. The RTC accepts clock frequencies as low as 1Hz.

Note also that DORMANT does not halt PLLs. To avoid unnecessary power dissipation, software should power down PLLs before entering the DORMANT state, and power up and reconfigure the PLLs again after exiting.

The DORMANT state is entered by writing a keyword to the DORMANT register in whichever oscillator is active: ring oscillator (Section 2.17) or crystal oscillator (Section 2.16). If both are active then the one providing the processor clock must be stopped last because it will stop software from executing.

2.11.4. Memory Power Down

The main system memories (SRAM0…5, mapped to bus addresses `0x20000000` to `0x20041fff`), as well as the USB DPRAM, can be powered down via the MEMPOWERDOWN register in the Syscfg registers (see Section 2.21). When powered down, memories retain their current contents, but cannot be accessed. Static power is reduced.

CAUTION

Memories must not be accessed when powered down. Doing so can corrupt memory contents.

When powering a memory back up, a 20ns delay is required before accessing the memory again.

The XIP cache (see Section 2.6.3) can also be powered down, with CTRL.POWER_DOWN. The XIP hardware will not generate cache accesses whilst the cache is powered down. Note that this is unlikely to produce a net power savings if code continues to execute from XIP, due to the comparatively high voltages and switching capacitances of the external QSPI bus.

2.11.5. Programmer's Model

2.11.5.1. Sleep

The hello_sleep example, https://github.com/raspberrypi/pico-playground/blob/master/sleep/hello_sleep/hello_sleep_aon.c, demonstrates sleep mode. The hello_sleep application (and underlying functions) takes the following steps:

- Run all clocks in the system from XOSC
- Configure an alarm in the RTC for 10 seconds in the future
- Set clk_rtc as the only clock running in sleep mode using the SLEEP_ENx registers (see SLEEP_EN0)
- Enable deep sleep in the processor
- Call `__wfi` on processor which will put the processor into deep sleep until woken by the RTC interrupt
- The RTC interrupt clears the alarm and then calls a user supplied callback function
- The callback function ends the example application

NOTE

It is necessary to enable deep sleep on both proc0 and proc1 and call `__wfi`, as well as ensure the DMA is stopped to enter sleep mode.

hello_sleep makes use of functions in `pico_sleep` of the Pico Extras. In particular, `sleep_goto_sleep_until` puts the processor to sleep until woken up by an RTC time assumed to be in the future.

Pico Extras: https://github.com/raspberrypi/pico-extras/blob/master/src/rp2_common/pico_sleep/sleep.c Lines 159 - 183

```
159 void sleep_goto_sleep_until(struct timespec *ts, aon_timer_alarm_handler_t callback)
160 {
161
162     // We should have already called the sleep_run_from_dormant_source function
163     // This is only needed for dormancy although it saves power running from xosc while
    sleeping
164     //assert(dormant_source_valid(_dormant_source));
165
166     clocks_hw->sleep_en0 = CLOCKS_SLEEP_EN0_CLK_RTC_RTC_BITS;
167     clocks_hw->sleep_en1 = 0x0;
168
169     aon_timer_enable_alarm(ts, callback, false);
170
171     stdio_flush();
172
173     // Enable deep sleep at the proc
174     processor_deep_sleep();
```

```
175
176     // Go to sleep
177     __wfi();
178 }
```

2.11.5.2. Dormant

The hello_dormant example, https://github.com/raspberrypi/pico-playground/blob/master/sleep/hello_dormant/hello_dormant_gpio.c, demonstrates dormant mode. The example takes the following steps:

- Run all clocks in the system from XOSC
- Configure a GPIO interrupt for the "dormant_wake" hardware which can wake both the ROSC and XOSC from dormant mode
- Put the XOSC into dormant mode which stops all processor execution (and all other clocked logic on the chip) immediately
- When GPIO 10 goes high, the XOSC is started again and execution of the program continues

hello_dormant uses sleep_goto_dormant_until_pin under the hood:

Pico Extras: https://github.com/raspberrypi/pico-extras/blob/master/src/rp2_common/pico_sleep/sleep.c Lines 258 - 282

```
258 void sleep_goto_dormant_until_pin(uint gpio_pin, bool edge, bool high) {
259     bool low = !high;
260     bool level = !edge;
261
262     // Configure the appropriate IRQ at IO bank 0
263     assert(gpio_pin < NUM_BANK0_GPIOS);
264
265     uint32_t event = 0;
266
267     if (level && low) event = IO_BANK0_DORMANT_WAKE_INTE0_GPIO0_LEVEL_LOW_BITS;
268     if (level && high) event = IO_BANK0_DORMANT_WAKE_INTE0_GPIO0_LEVEL_HIGH_BITS;
269     if (edge && high) event = IO_BANK0_DORMANT_WAKE_INTE0_GPIO0_EDGE_HIGH_BITS;
270     if (edge && low) event = IO_BANK0_DORMANT_WAKE_INTE0_GPIO0_EDGE_LOW_BITS;
271
272     gpio_init(gpio_pin);
273     gpio_set_input_enabled(gpio_pin, true);
274     gpio_set_dormant_irq_enabled(gpio_pin, event, true);
275
276     _go_dormant();
277     // Execution stops here until woken up
278
279     // Clear the irq so we can go back to dormant mode again if we want
280     gpio_acknowledge_irq(gpio_pin, event);
281     gpio_set_input_enabled(gpio_pin, false);
282 }
```

2.12. Chip-Level Reset

2.12.1. Overview

The chip-level reset subsystem resets the whole chip, placing it in a default state. This happens at initial power-on, during a power supply brown-out event or when the chip's RUN pin is taken low. The chip can also be reset via the

Rescue Debug Port. See Section 2.3.4.2, “Rescue DP” for details.

The subsystem has two reset outputs. `rst_n_psm`, which resets the whole chip, except the debug port, and `rst_n_dp`, which only resets the Rescue DP. Both resets are held low at initial power-on, during a brown-out event or when RUN is low. `rst_n_psm` can additionally be held low by the Rescue DP via the subsystem’s `psm_restart` input. This allows the chip to be reset via the Rescue DP without resetting the Rescue DP itself. The subsystem releases chip level reset by taking `rst_n_psm` high, handing control to the Power-on State Machine, which continues to start up the chip. See Section 2.13, “Power-On State Machine” for details.

The chip level reset subsystem is shown in Figure 21, and more information is available in the following sections.

Figure 21. The chip-level reset subsystem

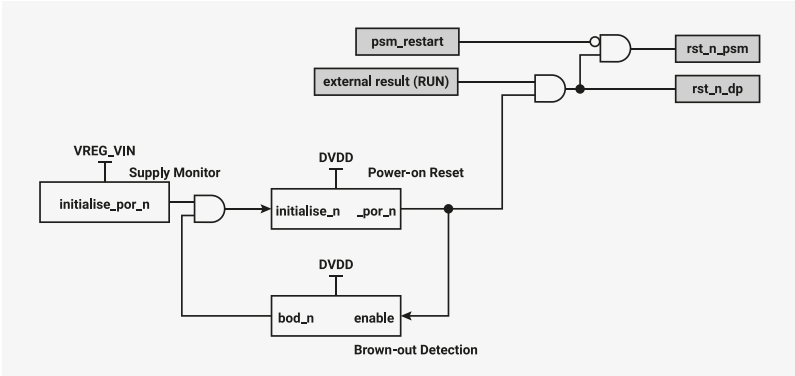

2.12.2. Power-on Reset

The power-on reset block makes sure the chip starts up cleanly when power is first applied by holding it in reset until the digital core supply (DVDD) can reliably power the chip’s core logic. The block holds its `por_n` output low until DVDD has been above the *power-on reset threshold* ($DVDD_{TH.POR}$) for a period greater than the *power-on reset assertion delay* ($t_{POR.ASSERT}$). Once high, `por_n` remains high even if DVDD subsequently falls below $DVDD_{TH.POR}$, unless brown-out detection is enabled. The behaviour of `por_n` when power is applied is shown in Figure 22.

$DVDD_{TH.POR}$ is fixed at a nominal 0.957V, which should result in a threshold between 0.924V and 0.99V. The threshold assumes a nominal DVDD of 1.1V at initial power-on, and `por_n` may never go high if a lower voltage is used. Once the chip is out of reset, DVDD can be reduced without `por_n` going low, as long as brown-out detection has been disabled or a suitable threshold voltage has been set.

Figure 22. A power-on reset cycle

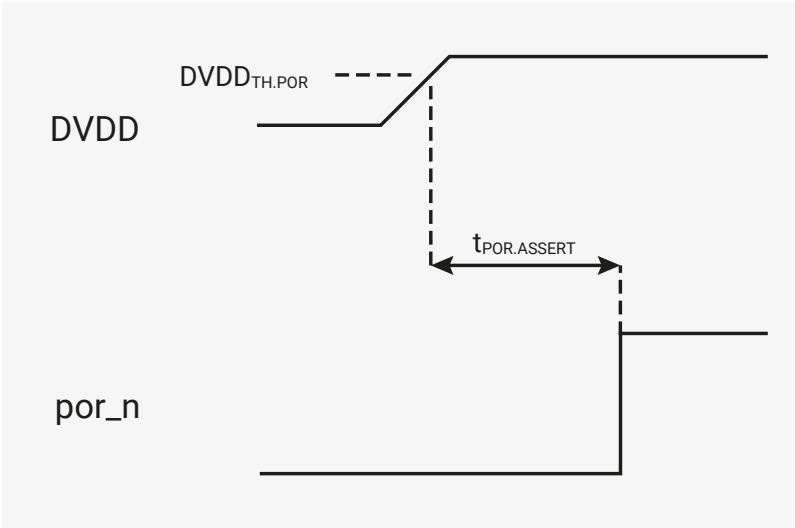

2.12.2.1. Detailed Specifications

Table 193. Power-on Reset Parameters

Parameter	Description	Min	Typ	Max	Units
$DVDD_{TH.POR}$	power-on reset threshold	0.924	0.957	0.99	V
$t_{POR.ASSERT}$	power-on reset assertion delay		3	10	µs

2.12.3. Brown-out Detection

The brown-out detection block prevents unreliable operation by initiating a power-on reset cycle if the digital core supply (DVDD) drops below a safe operating level. The block's `bod_n` output is taken low if DVDD drops below the *brown-out detection threshold* ($DVDD_{TH.BOD}$) for a period longer than the *brown-out detection assertion delay* ($t_{BOD.ASSERT}$). This re-initialises the power-on reset block, which resets the chip, by taking its `por_n` output low, and holds it in reset until DVDD returns to a safe operating level. Figure 23 shows a brown-out event and the subsequent power-on reset cycle.

Figure 23. A brown-out detection cycle

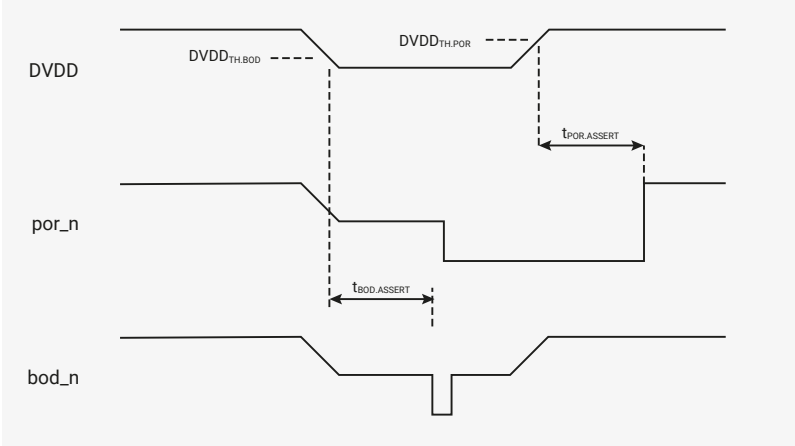

2.12.3.1. Detection Enable

Brown-out detection is automatically enabled at initial power-on or after a brown-out initiated reset. There is, however, a short delay, the *brown-out detection activation delay* ($t_{BOD.ACTIVE}$), between `por_n` going high and detection becoming active. This is shown in Figure 24.

Figure 24. Activation of brown-out detection at initial power-on and following a brown-out event.

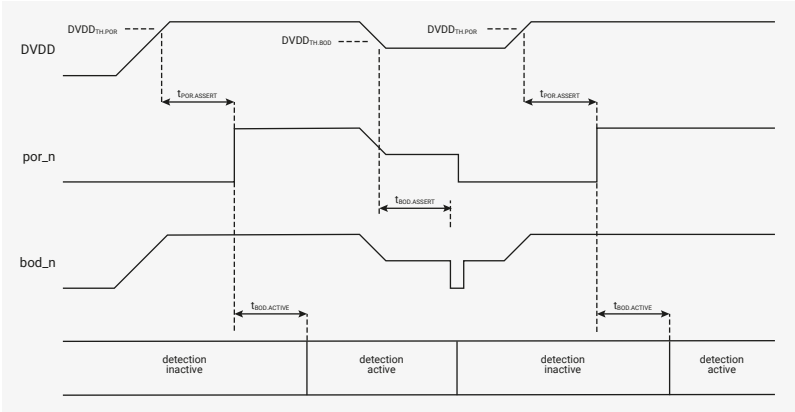

Once the chip is out of reset, detection can be disabled under software control. This also saves a small amount of power. If detection is subsequently re-enabled, there will be another short delay, the *brown-out detection enable delay* ($t_{BOD.ENABLE}$), before it becomes active again. This is shown in Figure 25.

Detection is disabled by writing a zero to the EN field in the BOD register and is re-enabled by writing a one to the same field. The block's bod_n output is high when detection is disabled.

Figure 25. Disabling and enabling brown-out detection

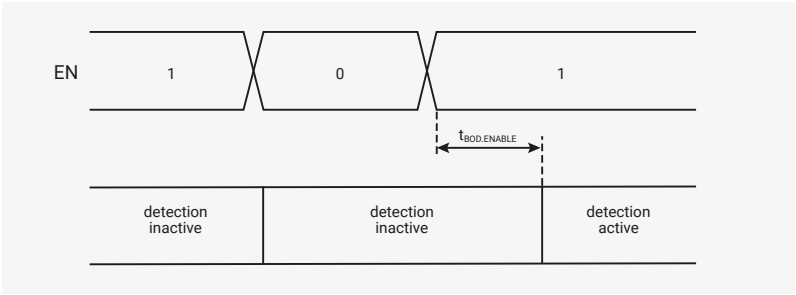

Detection is re-enabled if the BOD register is reset, as this sets the register's EN field to one. Again, detection will become active after a delay equal to the *brown-out detection enable delay* ($t_{BOD.ENABLE}$).

NOTE

If the BOD register is reset by a power-on or brown-out initiated reset, the delay between the register being reset and brown-out detection becoming active will be equal to the *brown-out detection activation delay* ($t_{BOD.ACTIVE}$). The delay will be equal to the *brown-out detection enable delay* ($t_{BOD.ENABLE}$) for all other reset sources.

2.12.3.2. Adjusting the Detection Threshold

The *brown-out detection threshold* ($DVDD_{TH.BOD}$) has a nominal value of 0.86V at initial power-on or after a reset event. This should result in a detection threshold between 0.83V and 0.89V. Once out of reset, the threshold can be adjusted under software control. The new detection threshold will take effect after the *brown-out detection programming delay* (($t_{BOD.PROG}$). An example of this is shown in Figure 26.

The threshold is adjusted by writing to the VSEL field in the BOD register. See the BOD register description for details.

Figure 26. Adjusting the brown-out detection threshold

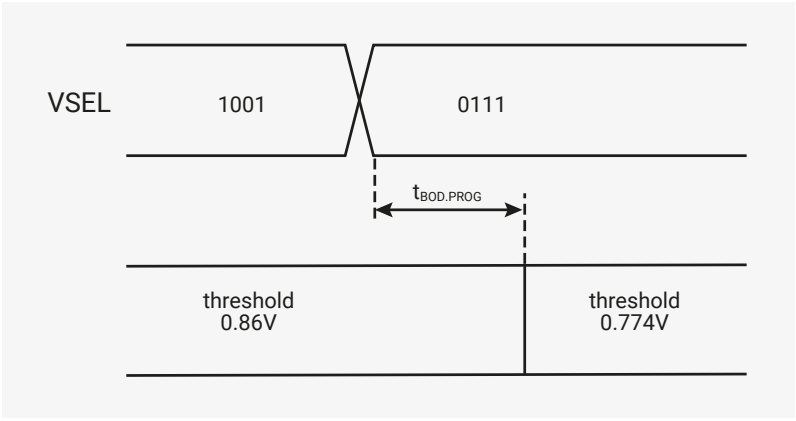

2.12.3.3. Detailed Specifications

Table 194. Brown-out Detection Parameters

Parameter	Description	Min	Typ	Max	Units
$DVDD_{TH.BOD}$	brown-out detection threshold	96.5	100	103.5	% of selected threshold voltage
$t_{BOD.ACTIVE}$	brown-out detection activation delay		55	80	µs

Parameter	Description	Min	Typ	Max	Units
$t_{BOD.ASSERT}$	brown-out detection assertion delay		3	10	µs
$t_{BOD.ENABLE}$	brown-out detection enable delay		35	55	µs
$t_{BOD.PROG}$	brown-out detection programming delay		20	30	µs

2.12.4. Supply Monitor

The power-on and brown-out reset blocks are powered by the on-chip voltage regulator's input supply (VREG_VIN). The blocks are initialised when power is first applied, but may not be reliably re-initialised if power is removed and then reapplied before VREG_VIN has dropped to a sufficiently low level. To prevent this happening, VREG_VIN is monitored and the power-on reset block is re-initialised if it drops below the *VREG_VIN activation threshold* ($VREG_VIN_{TH.ACTIVE}$). $VREG_VIN_{TH.ACTIVE}$ is fixed at a nominal 1.1V, which should result in a threshold between 0.87V and 1.26V. This threshold does not represent a safe operating voltage. It is the voltage that VREG_VIN must drop below to reliably re-initialise the power-on reset block. For safe operation, VREG_VIN must be at a nominal voltage between 1.8V and 3.3V.

2.12.4.1. Detailed Specifications

Table 195. Voltage Regulator Input Supply Monitor Parameters

Parameter	Description	Min	Typ	Max	Units
$VREG_VIN_{TH.ACTIVE}$	VREG_VIN activation threshold	0.87	1.1	1.26	V

2.12.5. External Reset

The chip can also be reset by taking its RUN pin low. Taking RUN low will hold the chip in reset irrespective of the state of the core power supply (DVDD) and the power-on reset / brown-out detection blocks. The chip will come out of reset as soon as RUN is taken high, if all other reset sources have been released. RUN can be used to extend the initial power-on reset, or can be driven from an external source to start and stop the chip as required. If RUN is not used, it should be tied high.

2.12.6. Rescue Debug Port Reset

The chip can also be reset via the Rescue Debug Port. This allows the chip to be recovered from a locked up state. In addition to resetting the chip, a Rescue Debug Port reset also sets the `PSM_RESTART_FLAG` in the CHIP_RESET register. This is checked by the bootcode at startup, causing it to enter a safe state if the bit is set. See Section 2.3.4.2, "Rescue DP" for more information.

2.12.7. Source of Last Reset

The source of the most recent chip-level reset can be determined by reading the state of the HAD_POR, HAD_RUN and HAD_PSM_RESTART fields in the CHIP_RESET register. A one in the HAD_POR field indicates a power supply related reset, i.e. either a power-on or brown-out initiated reset, a one in the HAD_RUN field indicates the chip was last reset by the RUN pin, and a one in the HAD_PSM_RESTART field indicates the chip has been reset via Rescue Debug Port. There should never be more than one field set to one.

2.12.8. List of Registers

The chip-level reset subsystem shares a register address space with the on-chip voltage regulator. The registers for both subsystems are listed in Section 2.10.6. The shared address space is referred to as vreg_and_chip_reset elsewhere in this document.

2.13. Power-On State Machine

2.13.1. Overview

The power-on state machine removes the reset from various hardware blocks in a specific order. Each peripheral in the power-on state machine is controlled by an internal rst_n active-low reset signal and generates an internal rst_done active-high reset done signal. The power-on state machine deasserts the reset to each peripheral, waits for that peripheral to assert its rst_done and then deasserts the reset to the next peripheral. An important use of this is to wait for a clock source to be running cleanly in the chip before the reset to the clock generators is deasserted. This avoids potentially glitchy clocks being distributed to the chip.

The power-on state machine is itself taken out of reset when the Chip-Level Reset subsystem confirms that the digital core supply (DVDD) is powered and stable, and the RUN pin is high. The power-on state machine takes a number of other blocks out of reset at this point via its rst_n_run output. This is used to reset things that need to be reset at start-up but must not be reset if the power-on state machine is restarted. This list includes:

- Power on logic in the ring oscillator and crystal oscillator
- Clock dividers which must keep on running during a power-on state machine restart (clk_ref and clk_sys)
- Watchdog (contains scratch registers which need to persist through a soft-restart of the power-on state machine)

2.13.2. Power On Sequence

Figure 27. Power-On State Machine Sequence.

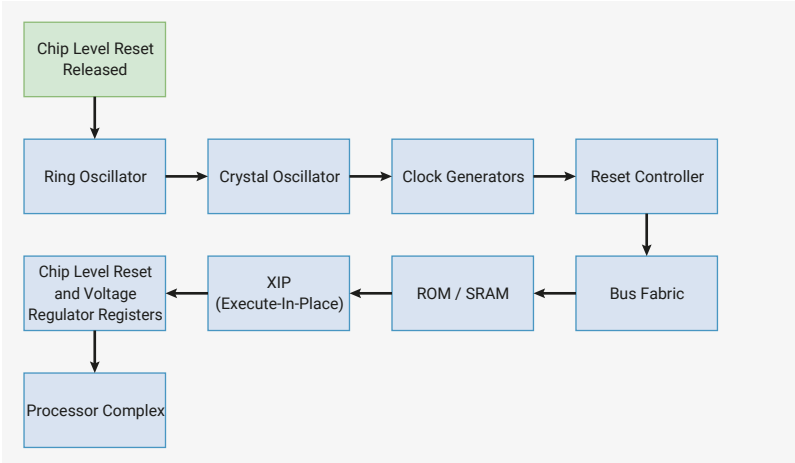

The power-on state machine sequence is as follows:

- Chip-Level Reset subsystem deasserts power-on state machine reset once digital core supply (DVDD) is powered and stable, and RUN pin is high (rst_n_run is also deasserted at this point)
- Ring Oscillator is started. rst_done is asserted once the ripple counter has seen a sufficient number of clock edges to indicate the ring oscillator is stable
- Crystal Oscillator reset is deasserted. The crystal oscillator is not started at this point, so rst_done is asserted instantly.
- clk_ref and clk_sys clock generators are taken out of reset. In the initial configuration clk_ref is running from the ring oscillator with no divider. clk_sys is running from clk_ref. These clocks are needed for the rest of the sequence to progress.

The rest of the sequence is fairly simple, with the following coming out of reset in order one by one:

- Reset Controller - used to reset all non-boot peripherals
- Chip-Level Reset and Voltage Regulator registers - used by the bootrom to check the boot state of the chip. In particular, the PSM_RESTART_FLAG flag in the CHIP_RESET register can be set via SWD to indicate to the boot code that there is bad code in flash and it should stop executing. The reset state of the CHIP_RESET register is determined by the Chip-Level Reset subsystem and is not affected by reset coming from the power-on state machine
- XIP (Execute-In-Place) - used by the bootrom to execute code from an external SPI flash
- ROM and SRAM - Boot code is executed from the ROM. SRAM is used by processors and Bus Fabric.
- Bus Fabric - Allows the processors to communicate with peripherals
- Processor complex - Finally the processors can start running

The final thing to come out of reset is the processor complex. This includes both core0 and core1. Both cores will start executing the bootcode from ROM. One of the first things the bootrom does is read the core id. At this point, core1 will go to sleep leaving core0 to continue with the bootrom execution. The processor complex has its own reset control and various low-power modes which is why both the core0 and core1 resets are deasserted, despite only core0 being needed for the bootrom.

2.13.3. Register Control

The power-on state machine is a fully automated piece of hardware. It requires no input from the user to work. There are register controls that can be used to override and see the status of the power-on state machine. This allows hardware blocks in the power-on state machine to be reset by software if necessary. There is also a WDSEL register which is used to control what is reset by a Watchdog reset.

2.13.4. Interaction with Watchdog

The power-on state machine can be restarted from a software-programmable position if the Watchdog fires. For example, in the case the processor is stuck in an infinite loop, or the programmer has somehow misconfigured the chip. It is important to note that if a peripheral in the power-on state machine has the WDSEL bit set, every peripheral after it in the power-on sequence will also be reset because the rst_done of the selected peripheral will be deasserted, asserting rst_n for the remaining peripherals.

2.13.5. List of Registers

The PSM registers start at a base address of 0x40010000 (defined as PSM_BASE in SDK).

Table 196. List of PSM registers

Offset	Name	Info
0x0	FRCE_ON	Force block out of reset (i.e. power it on)
0x4	FRCE_OFF	Force into reset (i.e. power it off)
0x8	WDSEL	Set to 1 if this peripheral should be reset when the watchdog fires.
0xc	DONE	Indicates the peripheral's registers are ready to access.

PSM: FRCE_ON Register

Offset: 0x0

Description

Force block out of reset (i.e. power it on)

Table 197. FRCE_ON Register

Bits	Description	Type	Reset
31:17	Reserved.	-	-
16	**PROC1**	RW	0x0
15	**PROC0**	RW	0x0
14	**SIO**	RW	0x0
13	**VREG_AND_CHIP_RESET**	RW	0x0
12	**XIP**	RW	0x0
11	**SRAM5**	RW	0x0
10	**SRAM4**	RW	0x0
9	**SRAM3**	RW	0x0
8	**SRAM2**	RW	0x0
7	**SRAM1**	RW	0x0
6	**SRAM0**	RW	0x0
5	**ROM**	RW	0x0
4	**BUSFABRIC**	RW	0x0
3	**RESETS**	RW	0x0
2	**CLOCKS**	RW	0x0
1	**XOSC**	RW	0x0
0	**ROSC**	RW	0x0

PSM: FRCE_OFF Register

Offset: 0x4

Description

Force into reset (i.e. power it off)

Table 198. FRCE_OFF Register

Bits	Description	Type	Reset
31:17	Reserved.	-	-
16	**PROC1**	RW	0x0

Bits	Description	Type	Reset
15	**PROC0**	RW	0x0
14	**SIO**	RW	0x0
13	**VREG_AND_CHIP_RESET**	RW	0x0
12	**XIP**	RW	0x0
11	**SRAM5**	RW	0x0
10	**SRAM4**	RW	0x0
9	**SRAM3**	RW	0x0
8	**SRAM2**	RW	0x0
7	**SRAM1**	RW	0x0
6	**SRAM0**	RW	0x0
5	**ROM**	RW	0x0
4	**BUSFABRIC**	RW	0x0
3	**RESETS**	RW	0x0
2	**CLOCKS**	RW	0x0
1	**XOSC**	RW	0x0
0	**ROSC**	RW	0x0

PSM: WDSEL Register

Offset: 0x8

Description

Set to 1 if this peripheral should be reset when the watchdog fires.

Table 199. WDSEL Register

Bits	Description	Type	Reset
31:17	Reserved.	-	-
16	**PROC1**	RW	0x0
15	**PROC0**	RW	0x0
14	**SIO**	RW	0x0
13	**VREG_AND_CHIP_RESET**	RW	0x0
12	**XIP**	RW	0x0
11	**SRAM5**	RW	0x0
10	**SRAM4**	RW	0x0
9	**SRAM3**	RW	0x0
8	**SRAM2**	RW	0x0
7	**SRAM1**	RW	0x0
6	**SRAM0**	RW	0x0
5	**ROM**	RW	0x0
4	**BUSFABRIC**	RW	0x0

Bits	Description	Type	Reset
3	**RESETS**	RW	0x0
2	**CLOCKS**	RW	0x0
1	**XOSC**	RW	0x0
0	**ROSC**	RW	0x0

PSM: DONE Register

Offset: 0xc

Description

Indicates the peripheral's registers are ready to access.

Table 200. DONE Register

Bits	Description	Type	Reset
31:17	Reserved.	-	-
16	**PROC1**	RO	0x0
15	**PROC0**	RO	0x0
14	**SIO**	RO	0x0
13	**VREG_AND_CHIP_RESET**	RO	0x0
12	**XIP**	RO	0x0
11	**SRAM5**	RO	0x0
10	**SRAM4**	RO	0x0
9	**SRAM3**	RO	0x0
8	**SRAM2**	RO	0x0
7	**SRAM1**	RO	0x0
6	**SRAM0**	RO	0x0
5	**ROM**	RO	0x0
4	**BUSFABRIC**	RO	0x0
3	**RESETS**	RO	0x0
2	**CLOCKS**	RO	0x0
1	**XOSC**	RO	0x0
0	**ROSC**	RO	0x0

2.14. Subsystem Resets

2.14.1. Overview

The reset controller allows software control of the resets to all of the peripherals that are not critical to boot the processor in RP2040. This includes:

- USB Controller

- PIO
- Peripherals such as UART, I2C, SPI, PWM, Timer, ADC
- PLLs
- IO and Pad registers

The full list can be seen in the register descriptions.

Every peripheral reset by the reset controller is held in reset at power-up. It is up to software to deassert the reset of peripherals it intends to use. Note that if you are using the SDK some peripherals may already be out of reset.

2.14.2. Programmer's Model

The SDK defines a struct to represent the resets registers.

SDK: https://github.com/raspberrypi/pico-sdk/blob/master/src/rp2040/hardware_structs/include/hardware/structs/resets.h Lines 59 - 146

```
 59 typedef struct {
 60     _REG_(RESETS_RESET_OFFSET) // RESETS_RESET
 61     // Reset control.
 62     // 0x01000000 [24]    USBCTRL      (1)
 63     // 0x00800000 [23]    UART1        (1)
 64     // 0x00400000 [22]    UART0        (1)
 65     // 0x00200000 [21]    TIMER        (1)
 66     // 0x00100000 [20]    TBMAN        (1)
 67     // 0x00080000 [19]    SYSINFO      (1)
 68     // 0x00040000 [18]    SYSCFG       (1)
 69     // 0x00020000 [17]    SPI1         (1)
 70     // 0x00010000 [16]    SPI0         (1)
 71     // 0x00008000 [15]    RTC          (1)
 72     // 0x00004000 [14]    PWM          (1)
 73     // 0x00002000 [13]    PLL_USB      (1)
 74     // 0x00001000 [12]    PLL_SYS      (1)
 75     // 0x00000800 [11]    PIO1         (1)
 76     // 0x00000400 [10]    PIO0         (1)
 77     // 0x00000200 [9]     PADS_QSPI    (1)
 78     // 0x00000100 [8]     PADS_BANK0   (1)
 79     // 0x00000080 [7]     JTAG         (1)
 80     // 0x00000040 [6]     IO_QSPI      (1)
 81     // 0x00000020 [5]     IO_BANK0     (1)
 82     // 0x00000010 [4]     I2C1         (1)
 83     // 0x00000008 [3]     I2C0         (1)
 84     // 0x00000004 [2]     DMA          (1)
 85     // 0x00000002 [1]     BUSCTRL      (1)
 86     // 0x00000001 [0]     ADC          (1)
 87     io_rw_32 reset;
 88
 89     _REG_(RESETS_WDSEL_OFFSET) // RESETS_WDSEL
 90     // Watchdog select.
 91     // 0x01000000 [24]    USBCTRL      (0)
 92     // 0x00800000 [23]    UART1        (0)
 93     // 0x00400000 [22]    UART0        (0)
 94     // 0x00200000 [21]    TIMER        (0)
 95     // 0x00100000 [20]    TBMAN        (0)
 96     // 0x00080000 [19]    SYSINFO      (0)
 97     // 0x00040000 [18]    SYSCFG       (0)
 98     // 0x00020000 [17]    SPI1         (0)
 99     // 0x00010000 [16]    SPI0         (0)
100     // 0x00008000 [15]    RTC          (0)
101     // 0x00004000 [14]    PWM          (0)
102     // 0x00002000 [13]    PLL_USB      (0)
```

```
103     // 0x00001000 [12]    PLL_SYS      (0)
104     // 0x00000800 [11]    PIO1         (0)
105     // 0x00000400 [10]    PIO0         (0)
106     // 0x00000200 [9]     PADS_QSPI    (0)
107     // 0x00000100 [8]     PADS_BANK0   (0)
108     // 0x00000080 [7]     JTAG         (0)
109     // 0x00000040 [6]     IO_QSPI      (0)
110     // 0x00000020 [5]     IO_BANK0     (0)
111     // 0x00000010 [4]     I2C1         (0)
112     // 0x00000008 [3]     I2C0         (0)
113     // 0x00000004 [2]     DMA          (0)
114     // 0x00000002 [1]     BUSCTRL      (0)
115     // 0x00000001 [0]     ADC          (0)
116     io_rw_32 wdsel;
117
118     _REG_(RESETS_RESET_DONE_OFFSET) // RESETS_RESET_DONE
119     // Reset done.
120     // 0x01000000 [24]    USBCTRL      (0)
121     // 0x00800000 [23]    UART1        (0)
122     // 0x00400000 [22]    UART0        (0)
123     // 0x00200000 [21]    TIMER        (0)
124     // 0x00100000 [20]    TBMAN        (0)
125     // 0x00080000 [19]    SYSINFO      (0)
126     // 0x00040000 [18]    SYSCFG       (0)
127     // 0x00020000 [17]    SPI1         (0)
128     // 0x00010000 [16]    SPI0         (0)
129     // 0x00008000 [15]    RTC          (0)
130     // 0x00004000 [14]    PWM          (0)
131     // 0x00002000 [13]    PLL_USB      (0)
132     // 0x00001000 [12]    PLL_SYS      (0)
133     // 0x00000800 [11]    PIO1         (0)
134     // 0x00000400 [10]    PIO0         (0)
135     // 0x00000200 [9]     PADS_QSPI    (0)
136     // 0x00000100 [8]     PADS_BANK0   (0)
137     // 0x00000080 [7]     JTAG         (0)
138     // 0x00000040 [6]     IO_QSPI      (0)
139     // 0x00000020 [5]     IO_BANK0     (0)
140     // 0x00000010 [4]     I2C1         (0)
141     // 0x00000008 [3]     I2C0         (0)
142     // 0x00000004 [2]     DMA          (0)
143     // 0x00000002 [1]     BUSCTRL      (0)
144     // 0x00000001 [0]     ADC          (0)
145     io_ro_32 reset_done;
146 } resets_hw_t;
```

Three registers are defined:

- reset: this register contains a bit for each peripheral that can be reset. If the bit is set to 1 then the reset is asserted. If the bit is cleared then the reset is deasserted.
- wdsel: if the bit is set then this peripheral will be reset if the watchdog fires (note that the power on state machine can potentially reset the whole reset controller, which will reset everything)
- reset_done: a bit for each peripheral, that gets set once the peripheral is out of reset. This allows software to wait for this status bit in case the peripheral has some initialisation to do before it can be used.

The reset functions in the SDK are defined as follows:

SDK: https://github.com/raspberrypi/pico-sdk/blob/master/src/rp2_common/hardware_resets/include/hardware/resets.h Lines 121 - 123

```
121 static __force_inline void reset_block(uint32_t bits) {
122     reset_block_mask(bits);
```

```
123 }
```

SDK: https://github.com/raspberrypi/pico-sdk/blob/master/src/rp2_common/hardware_resets/include/hardware/resets.h Lines 125 - 127

```
125 static __force_inline void unreset_block(uint32_t bits) {
126     unreset_block_mask(bits);
127 }
```

SDK: https://github.com/raspberrypi/pico-sdk/blob/master/src/rp2_common/hardware_resets/include/hardware/resets.h Lines 129 - 131

```
129 static __force_inline void unreset_block_wait(uint32_t bits) {
130     return unreset_block_mask_wait_blocking(bits);
131 }
```

An example use of these is in the UART driver, where the driver defines a uart_reset function, selecting a different bit of the reset register depending on the uart specified:

SDK: https://github.com/raspberrypi/pico-sdk/blob/master/src/rp2_common/hardware_uart/uart.c Lines 32 - 38

```
32 static inline void uart_reset(uart_inst_t *uart) {
33     reset_block_num(uart_get_reset_num(uart));
34 }
35
36 static inline void uart_unreset(uart_inst_t *uart) {
37     unreset_block_num_wait_blocking(uart_get_reset_num(uart));
38 }
```

2.14.3. List of Registers

The reset controller registers start at a base address of `0x4000c000` (defined as RESETS_BASE in SDK).

Table 201. List of RESETS registers

Offset	Name	Info
0x0	RESET	Reset control.
0x4	WDSEL	Watchdog select.
0x8	RESET_DONE	Reset done.

RESETS: RESET Register

Offset: 0x0

Description

Reset control. If a bit is set it means the peripheral is in reset. 0 means the peripheral's reset is deasserted.

Table 202. RESET Register

Bits	Description	Type	Reset
31:25	Reserved.	-	-
24	**USBCTRL**	RW	0x1
23	**UART1**	RW	0x1
22	**UART0**	RW	0x1
21	**TIMER**	RW	0x1

Bits	Description	Type	Reset
20	**TBMAN**	RW	0x1
19	**SYSINFO**	RW	0x1
18	**SYSCFG**	RW	0x1
17	**SPI1**	RW	0x1
16	**SPI0**	RW	0x1
15	**RTC**	RW	0x1
14	**PWM**	RW	0x1
13	**PLL_USB**	RW	0x1
12	**PLL_SYS**	RW	0x1
11	**PIO1**	RW	0x1
10	**PIO0**	RW	0x1
9	**PADS_QSPI**	RW	0x1
8	**PADS_BANK0**	RW	0x1
7	**JTAG**	RW	0x1
6	**IO_QSPI**	RW	0x1
5	**IO_BANK0**	RW	0x1
4	**I2C1**	RW	0x1
3	**I2C0**	RW	0x1
2	**DMA**	RW	0x1
1	**BUSCTRL**	RW	0x1
0	**ADC**	RW	0x1

RESETS: WDSEL Register

Offset: 0x4

Description

Watchdog select. If a bit is set then the watchdog will reset this peripheral when the watchdog fires.

Table 203. WDSEL Register

Bits	Description	Type	Reset
31:25	Reserved.	-	-
24	**USBCTRL**	RW	0x0
23	**UART1**	RW	0x0
22	**UART0**	RW	0x0
21	**TIMER**	RW	0x0
20	**TBMAN**	RW	0x0
19	**SYSINFO**	RW	0x0
18	**SYSCFG**	RW	0x0
17	**SPI1**	RW	0x0

Bits	Description	Type	Reset
16	**SPI0**	RW	0x0
15	**RTC**	RW	0x0
14	**PWM**	RW	0x0
13	**PLL_USB**	RW	0x0
12	**PLL_SYS**	RW	0x0
11	**PIO1**	RW	0x0
10	**PIO0**	RW	0x0
9	**PADS_QSPI**	RW	0x0
8	**PADS_BANK0**	RW	0x0
7	**JTAG**	RW	0x0
6	**IO_QSPI**	RW	0x0
5	**IO_BANK0**	RW	0x0
4	**I2C1**	RW	0x0
3	**I2C0**	RW	0x0
2	**DMA**	RW	0x0
1	**BUSCTRL**	RW	0x0
0	**ADC**	RW	0x0

RESETS: RESET_DONE Register

Offset: 0x8

Description

Reset done. If a bit is set then a reset done signal has been returned by the peripheral. This indicates that the peripheral's registers are ready to be accessed.

Table 204. RESET_DONE Register

Bits	Description	Type	Reset
31:25	Reserved.	-	-
24	**USBCTRL**	RO	0x0
23	**UART1**	RO	0x0
22	**UART0**	RO	0x0
21	**TIMER**	RO	0x0
20	**TBMAN**	RO	0x0
19	**SYSINFO**	RO	0x0
18	**SYSCFG**	RO	0x0
17	**SPI1**	RO	0x0
16	**SPI0**	RO	0x0
15	**RTC**	RO	0x0
14	**PWM**	RO	0x0
13	**PLL_USB**	RO	0x0

Bits	Description	Type	Reset
12	**PLL_SYS**	RO	0x0
11	**PIO1**	RO	0x0
10	**PIO0**	RO	0x0
9	**PADS_QSPI**	RO	0x0
8	**PADS_BANK0**	RO	0x0
7	**JTAG**	RO	0x0
6	**IO_QSPI**	RO	0x0
5	**IO_BANK0**	RO	0x0
4	**I2C1**	RO	0x0
3	**I2C0**	RO	0x0
2	**DMA**	RO	0x0
1	**BUSCTRL**	RO	0x0
0	**ADC**	RO	0x0

2.15. Clocks

2.15.1. Overview

The clocks block provides independent clocks to on-chip and external components. It takes inputs from a variety of clock sources allowing the user to trade off performance against cost, board area and power consumption. From these sources it uses multiple clock generators to provide the required clocks. This architecture allows the user flexibility to start and stop clocks independently and to vary some clock frequencies whilst maintaining others at their optimum frequencies.

Figure 28. Clocks overview

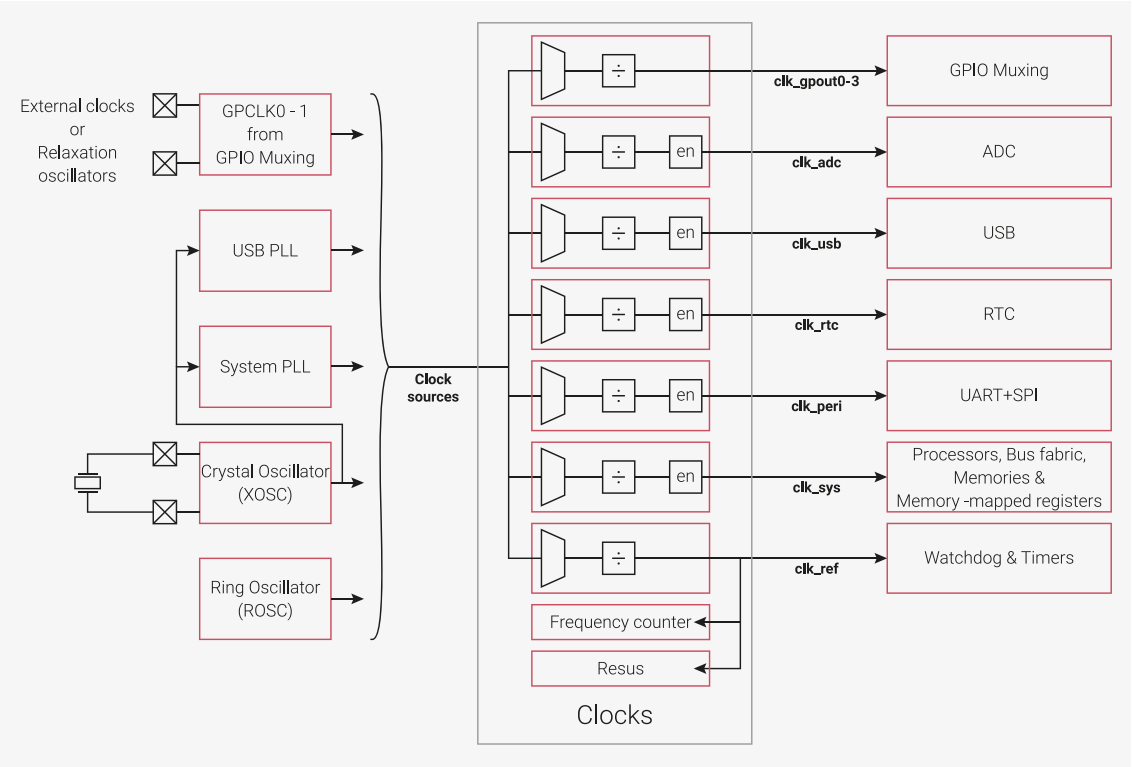

For very low cost or low power applications where precise timing is not required, the chip can be run from the internal Ring Oscillator (ROSC). Alternatively the user can provide external clocks or construct simple relaxation oscillators using the GPIOs and appropriate external passive components. Where timing is more critical, the Crystal Oscillator (XOSC) can provide an accurate reference to the 2 on-chip PLLs to provide fast clocking at precise frequencies.

The clock generators select from the clock sources and optionally divide the selected clock before outputting through enable logic which provides automatic clock disabling in SLEEP mode (see Section 2.11.2).

An on-chip frequency counter facilitates debugging of the clock setup and also allows measurement of the frequencies of external clocks. The on-chip resus component restarts the system clock from a known good clock if it is accidentally stopped. This allows the software debugger to access registers and debug the problem.

The chip has an ultra-low power mode called DORMANT (see Section 2.11.3) in which all on-chip clock sources are stopped to save power. External sources are not stopped and can be used to provide a clock to the on-chip RTC which can provide an alarm to wake the chip from DORMANT mode. Alternatively the GPIO interrupts can be configured to wake the chip from DORMANT mode in response to an external event.

Up to 4 generated clocks can be output to GPIOs at up to 50MHz. This allows the user to supply clocks to external devices, thus reducing component counts in power, space and cost sensitive applications.

2.15.2. Clock sources

The RP2040 can be run from a variety of clock sources. This flexibility allows the user to optimise the clock setup for performance, cost, board area and power consumption. The sources include the on-chip Ring Oscillator (Section 2.17), the Crystal Oscillator (Section 2.16), external clocks from GPIOs (Section 2.15.6.4) and the PLLs (Section 2.18).

The list of clock sources is different per clock generator and can be found as enumerated values in the `CTRL` register. See CLK_SYS_CTRL as an example.

2.15.2.1. Ring Oscillator

The on-chip Ring Oscillator (Section 2.17) requires no external components. It runs automatically from power-up and is used to clock the chip during the initial boot stages. The startup frequency is typically 6MHz but varies with PVT (Process, Voltage and Temperature). The frequency is likely to be in the range 4-8MHz and is guaranteed to be in the range 1.8-12MHz.

For low cost applications where frequency accuracy is unimportant, the chip can continue to run from the ROSC. If greater performance is required the frequency can be increased by programming the registers as described in Section 2.17. The frequency will vary with PVT (Process, Voltage and Temperature) so the user must take care to avoid exceeding the maximum frequencies described in the clock generators section. This variation can be mitigated in various ways (see Section 2.15.2.1.1) if the user wants to continue running from the ROSC at a frequency close to the maximum. Alternatively, the user can use an external clock or the XOSC to provide a stable reference clock and use the PLLs to generate higher frequencies. This will require external components, which will cost board area and increase power consumption.

If an external clock or the XOSC is used then the ROSC can be stopped to save power. However, the reference clock generator and the system clock generator must be switched to an alternate source before doing so.

The ROSC is not affected by SLEEP mode. If required the frequency can be reduced before entering SLEEP mode to save power. On entering DORMANT mode the ROSC is automatically stopped and is restarted in the same configuration when exiting DORMANT mode. If the ROSC is driving clocks at close to their maximum frequencies then it is recommended to drop the frequency before entering SLEEP or DORMANT mode to allow for frequency variation due to changes in environmental conditions during SLEEP or DORMANT mode.

If the user wants to use the ROSC clock externally then it can be output to a GPIO pin using one of the clk_gpclk0-3 generators.

The following sections describe techniques for mitigating PVT variation of the ROSC frequency. They also provide some interesting design challenges for use in teaching both the effects of PVT and writing software to control real time functions.

NOTE

The ROSC frequency varies with PVT so the user can send its output to the frequency counter and use it to measure any 1 of these 3 variables if the other 2 are known.

2.15.2.1.1. Mitigating ROSC frequency variation due to process

Process varies for two reasons. Firstly, chips leave the factory with a spread of process parameters which cause variation in the ROSC frequency across chips. Secondly, process parameters vary slightly as the chip ages, though this will only be observable over many thousands of hours of operation. To mitigate for process variation, the user can characterise individual chips and program the ROSC frequency accordingly. This is an adequate solution for small numbers of chips but is not suitable for volume production. In such applications the user should consider using the automatic mitigation techniques described below.

2.15.2.1.2. Mitigating ROSC frequency variation due to voltage

Supply voltage varies for two reasons. Firstly, the power supply itself may vary, and secondly, there will be varying on-chip IR drop as chip activity varies. If the application has a minimum performance target then the user needs to calibrate for that application and adjust the ROSC frequency to ensure it always exceeds the minimum required.

2.15.2.1.3. Mitigating ROSC frequency variation due to temperature

Temperature varies for two reasons. Firstly, the ambient temperature may vary, and secondly, the chip temperature will vary as chip activity varies due to self-heating. This can be mitigated by stabilising the temperature using a temperature

controlled environment and passive or active cooling. Alternatively the user can track the temperature using the on-chip temperature sensor and adjust the ROSC frequency so it remains within the required bounds.

2.15.2.1.4. Automatic mitigation of ROSC frequency variation due to PVT

Techniques for automatic ROSC frequency control avoid the need to calibrate individual chips but require periodic access to a clock reference or to a time reference. If a clock reference is available then it can be used to periodically measure the ROSC frequency and adjust it accordingly. The reference could be the on-chip XOSC which can be turned on periodically for this purpose. This may be useful in a very low power application where it is too costly to run the XOSC continuously and too costly to use the PLLs to achieve high frequencies. If a time reference is available then the user could clock the on-chip RTC from the ROSC and periodically compare it against the time reference, then adjust the ROSC frequency as necessary. Using these techniques the ROSC frequency will drift due to VT variation so the user must take care that these variations do not allow the ROSC frequency to drift out of the acceptable range.

2.15.2.1.5. Automatic overclocking using the ROSC

The datasheet maximum frequencies for any digital device are quoted for worst case PVT. Most chips in most normal environments can run significantly faster than the quoted maximum and can therefore be overclocked. If the RP2040 is running from the ROSC then both the ROSC and the digital components are similarly affected by PVT, so, as the ROSC gets faster, the processors can also run faster. This means the user can overclock from the ROSC then rely on the ROSC frequency tracking with PVT variations. The tracking of ROSC frequency and the processor capability is not perfect and currently there is insufficient data to specify a safe ROSC setting for this mode of operation, so some experimentation is required.

This mode of operation will maximise processor performance but will lead to variations in the time taken to complete a task, which may be unacceptable in some applications. Also, if the user wants to use frequency sensitive interfaces such as USB or UART then the XOSC and PLL must be used to provide a precise clock for those components.

2.15.2.2. Crystal Oscillator

The Crystal Oscillator (Section 2.16) provides a precise, stable clock reference and should be used where accurate timing is required and no suitable external clocks are available. The frequency is determined by the external crystal and the oscillator supports frequencies in the range 1MHz to 15MHz. The on-chip PLLs can be used to synthesise higher frequencies if required. The RP2040 reference design (see the Minimal Design Example in Hardware design with RP2040) uses a 12MHz crystal. Using the XOSC and the PLLs, the on-chip components can be run at their maximum frequencies. Appropriate margin is built into the design to tolerate up to 1000ppm variation in the XOSC frequency.

The XOSC is inactive on power up. If required it must be enabled in software. XOSC startup takes several milliseconds and the software must wait for the XOSC_STABLE flag to be set before starting the PLLs and before changing any clock generators to use it. Prior to that the output from the XOSC may be non-existent or may have very short pulse widths which will corrupt logic if used. Once it is running the reference clock (clk_ref) and the system clock (clk_sys) can be switched to run from the XOSC and the ROSC can be stopped to save power.

The XOSC is not affected by SLEEP mode. It is automatically stopped and restarted in the same configuration when entering and exiting DORMANT mode.

If the user wants to use the XOSC clock externally then it can be output to a GPIO pin using one of the clk_gpclk0-3 generators. It cannot be taken directly from the XIN or XOUT pins.

2.15.2.3. External Clocks

If external clocks exist in your hardware design then they can be used to clock the RP2040 either on their own or in conjunction with the XOSC or ROSC. This will potentially save power and will allow components on the RP2040 to be run synchronously with external components to simplify data transfer between chips. External clocks can be input on the

GPIN0 & GPIN1 GPIO inputs and on the XIN input to the XOSC. If the XIN input is used in this way the XOSC must be configured to pass through the XIN signal. All 3 inputs are limited to 50MHz but the on-chip PLLs can be used to synthesise higher frequencies from the XIN input if required. If the frequency accuracy of the external clocks is poorer than 1000ppm then the generated clocks should not be run at their maximum frequencies because they may exceed their design margins.

Once the external clocks are running, the reference clock (clk_ref) and the system clock (clk_sys) can be switched to run from the external clocks and the ROSC can be stopped to save power.

The external clock sources are not affected by SLEEP mode or DORMANT mode.

2.15.2.4. Relaxation Oscillators

If the user wants to use external clocks to replace or supplement the other clock sources but does not have an appropriate clock available, then 1 or 2 relaxation oscillators can be constructed using external passive components. Simply send the clock source (GPIN0 or GPIN1) to one of the gpclk0-3 generators, invert it through the GPIO inverter `OUTOVER` and connect back to the clock source input via an RC circuit.

Figure 29. Simple relaxation oscillator example

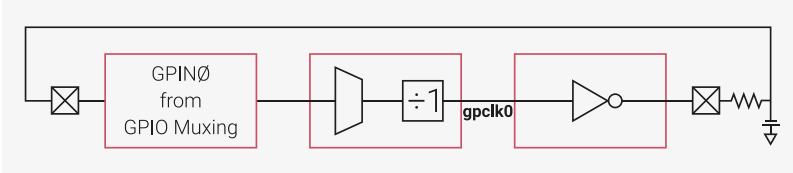

The frequency of clocks generated from relaxation oscillators will depend on the delay through the chip and the drive current from the GPIO output both of which vary with PVT. They will also depend on the quality and accuracy of the external components. It may be possible to improve the frequency accuracy using more elaborate external components such as ceramic resonators but that will increase cost and complexity and can never rival the XOSC. For that reason they are not discussed here. Given that these oscillators will not achieve 1000ppm then they cannot be used to drive internal clocks at their maximum frequencies.

The relaxation oscillators are not affected by SLEEP mode or DORMANT mode.

2.15.2.5. PLLs

The PLLs (Section 2.18) are used to provide fast clocks when running from the XOSC (or an external clock source driven into the XIN pin). In a fully featured application the USB PLL provides a fixed 48MHz clock to the ADC and USB while clk_rtc and clk_ref are driven from the XOSC or external source. This allows the user to drive clk_sys from the system PLL and vary the frequency according to demand to save power without having to change the setups of the other clocks. clk_peri can be driven either from the fixed frequency USB PLL or from the variable frequency system PLL. If clk_sys never needs to exceed 48MHz then one PLL can be used and the divider in the clk_sys clock generator can be used to scale the clk_sys frequency according to demand.

When a PLL is started, its output cannot be used until the PLL locks as indicated by the LOCK bit in the STATUS register. Thereafter the PLL output cannot be used during changes to the reference clock divider, the output dividers or the bypass mode. The output can be used during feedback divisor changes with the proviso that the output frequency may overshoot or undershoot on large changes to the feedback divisor. For more information, see Section 2.18.

If the PLL reference clock is accurate to 1000ppm then the PLLs can be used to drive clocks at their maximum frequency because the frequency of the generated clocks will be within the margins allowed in the design.

The PLLs are not affected by SLEEP mode. If the user wants to save power in SLEEP mode then all clock generators must be switched away from the PLLs and they must be stopped in software before entering SLEEP mode. The PLLs are not stopped and restarted automatically when entering and exiting DORMANT mode. If they are left running on entry to DORMANT mode they will be corrupted and will generate out of control clocks that will consume power unnecessarily. This happens because their reference clock from XOSC will be stopped. It is therefore essential to switch all clock generators away from the PLLs and stop the PLLs in software before entering DORMANT mode.

2.15.3. Clock Generators

The clock generators are built on a standard design which incorporates clock source multiplexing, division, duty cycle correction and SLEEP mode enabling. To save chip area and power, the individual clock generators do not support all features.

Figure 30. A generic clock generator

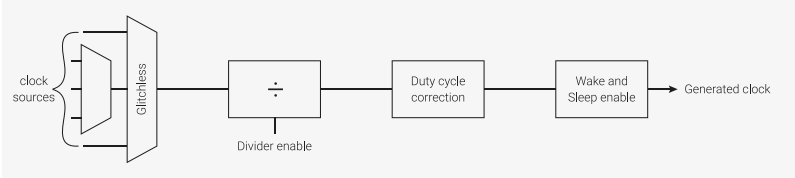

2.15.3.1. Instances

RP2040 has several clock generators which are listed below.

Table 205. RP2040 clock generators

Clock	Description	Nominal Frequency
clk_gpout0	Clock output to GPIO. Can be used to clock external devices or debug on chip clocks with a logic analyser or oscilloscope.	*N/A*
clk_gpout1		
clk_gpout2		
clk_gpout3		
clk_ref	Reference clock that is always running unless in DORMANT mode. Runs from Ring Oscillator (ROSC) at power-up but can be switched to Crystal Oscillator (XOSC) for more accuracy.	6 - 12MHz
clk_sys	System clock that is always running unless in DORMANT mode. Runs from clk_ref at power-up but is typically switched to a PLL.	125MHz
clk_peri	Peripheral clock. Typically runs from clk_sys but allows peripherals to run at a consistent speed if clk_sys is changed by software.	12 - 125MHz
clk_usb	USB reference clock. Must be 48MHz.	48MHz
clk_adc	ADC reference clock. Must be 48MHz.	48MHz
clk_rtc	RTC reference clock. The RTC divides this clock to generate a 1 second reference.	46875Hz

NOTE

clk_sys (and clk_peri) have a maximum frequency of 133MHz across all process, voltage and temperature variations. You can achieve 200MHz by running at an elevated core supply (DVDD) and setting VREG VSEL to 1.15V. For more information, see Section 2.10.6.

For a full list of clock sources for each clock generator see the appropriate CTRL register. For example, CLK_SYS_CTRL.

2.15.3.2. Multiplexers

All clock generators have a multiplexer referred to as the auxiliary (aux) mux. This mux has a conventional design whose output will glitch when changing the select control. Two clock generators (`clk_sys` and `clk_ref`) have an additional multiplexer, referred to as the glitchless mux. The glitchless mux can switch between clock sources without generating a glitch on the output.

Clock glitches should be avoided at all costs because they may corrupt the logic running on that clock. This means that any clock generator with only an aux mux must be disabled while switching the clock source. If the clock generator has a glitchless mux (`clk_sys` and `clk_ref`), then the glitchless mux should switch away from the aux mux while changing the aux mux source. The clock generators require 2 cycles of the source clock to stop the output and 2 cycles of the new source to restart the output. The user must wait for the generator to stop before changing the auxiliary mux, and therefore must be aware of the source clock frequency.

The glitchless mux is only implemented for always-on clocks. On RP2040 the always-on clocks are the reference clock (clk_ref) and the system clock (clk_sys). Such clocks must run continuously unless the chip is in DORMANT mode. The glitchless mux has a status output (SELECTED) which indicates which source is selected and can be read from software to confirm that a change of clock source has been completed.

The recommended control sequences are as follows.

To switch the glitchless mux:

- switch the glitchless mux to an alternate source
- poll the SELECTED register until the switch is completed

To switch the auxiliary mux when the generator has a glitchless mux:

- switch the glitchless mux to a source that isn't the aux mux
- poll the SELECTED register until the switch is completed
- change the auxiliary mux select control
- switch the glitchless mux back to the aux mux
- if required, poll the SELECTED register until the switch is completed

To switch the auxiliary mux when the generator does not have a glitchless mux:

- disable the clock divider
- wait for the generated clock to stop (2 cycles of the clock source)
- change the auxiliary mux select control
- enable the clock divider
- if required, wait for the clock generator to restart (2 cycles of the clock source)

See Section 2.15.6.1 for a code example of this.

2.15.3.3. Divider

A fully featured divider divides by 1 or a fractional number in the range 2.0 to 2^24-0.01. Fractional division is achieved by toggling between 2 integer divisors therefore it yields a jittery clock which may not be suitable for some applications. For example, when dividing by 2.4 the divider will divide by 2 for 3 cycles and by 3 for 2 cycles. For divisors with large integer components the jitter will be much smaller and less critical.

Figure 31. An example of fractional division.

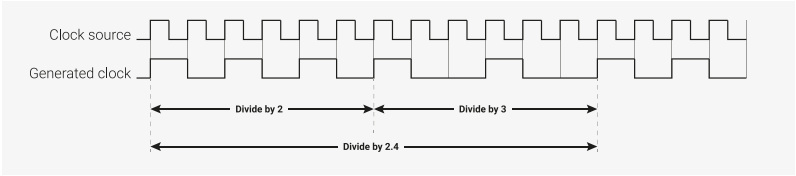

All dividers support on-the-fly divisor changes meaning the output clock will switch cleanly from one divisor to another. The clock generator does not need to be stopped during clock divisor changes. It does this by synchronising the divisor change to the end of the clock cycle. Similarly, the enable is synchronised to the end of the clock cycle so will not generate glitches when the clock generator is enabled or disabled. Clock generators for always-on clocks are permanently enabled and therefore do not have an enable control.

In the event that a clock generator locks up and never completes the current clock cycle it can be forced to stop using the KILL control. This may result in an output glitch which may corrupt the logic driven by the clock. It is therefore recommended the destination logic is reset prior to this operation. It is worth mentioning that this clock generator design has been used in numerous chips and has never been known to lock up. The KILL control is inelegant and unnecessary and should not be used as an alternative to the enable. Clock generators for always-on clocks are permanently active and therefore do not have a KILL control.

2.15.3.4. Duty Cycle Correction

The divider operates on the rising edge of the input clock and so does not generate an even duty cycle clock when dividing by odd numbers.

Divide by 3 will give a duty cycle of 33.3%, divide by 5 will be 40% etc. If enabled, the duty cycle correction logic will shift the falling edge of the output clock to the falling edge of the input clock and restore a 50% duty cycle. The duty cycle correction can be enabled and disabled while the clock is running. It will not operate when dividing by an even number.

Figure 32. An example of duty_cycle_correction.

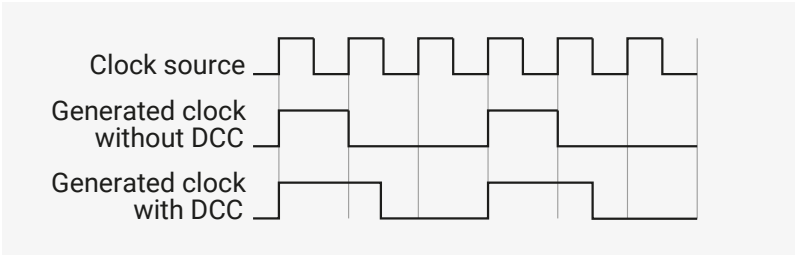

2.15.3.5. Clock Enables

Each clock goes to multiple destinations and, with a few exceptions, there are 2 enables for each destination. The `WAKE_EN` registers are used to enable the clocks when the system is awake and the `SLEEP_EN` registers are used to enable the clocks when the system is in sleep mode. The purpose of these enables is to reduce power in the clock distribution networks for components that are not being used. It is worth noting that a component which is not clocked will retain its configuration so can be restarted quickly.

NOTE

The `WAKE_EN` and `SLEEP_EN` registers reset to `0x1`, which means that by default all clocks are enabled. The programmer only needs to use this feature if they desire a low-power design.

2.15.3.5.1. Clock Enable Exceptions

The processor cores do not have clock enables because they require a clock at all times to manage their own power saving features.

clk_sys_busfabric cannot be disabled in wake mode because that would prevent the cores from accessing any chip registers, including those that control the clock enables.

clk_sys_clocks does not have a wake mode enable because disabling it would prevent the cores from accessing the clocks control registers.

The gpclks do not have clock enables.

2.15.3.5.2. System Sleep Mode

System sleep mode is entered automatically when both cores are in sleep and the DMA has no outstanding transactions. In system sleep mode, the clock enables described in the previous paragraphs are switched from the WAKE_EN registers to the SLEEP_EN registers. The intention is to reduce power consumed in the clock distribution networks when the chip is inactive. If the user has not configured the WAKE_EN and SLEEP_EN registers then system sleep will do nothing.

There is little value in using system sleep without taking other measures to reduce power before the cores are put to sleep. Things to consider include:

- stop unused clock sources such as the PLLs and Crystal Oscillator
- reduce the frequencies of generated clocks by increasing the clock divisors
- stop external clocks

For maximum power saving when the chip is inactive, the user should consider DORMANT (see Section 2.11.3) mode in which clocks are sourced from the Crystal Oscillator and/or the Ring Oscillator and those clock sources are stopped.

2.15.4. Frequency Counter

The frequency counter measures the frequency of internal and external clocks by counting the clock edges seen over a test interval. The interval is defined by counting cycles of clk_ref which must be driven either from XOSC or from a stable external source of known frequency.

The user can pick between accuracy and test time using the FC0_INTERVAL register. Table 206 shows the trade off.

Table 206. Frequency Counter Test Interval vs Accuracy

Interval Register	Test Interval	Accuracy
0	1µs	2048kHz
1	2µs	1024kHz
2	4µs	512kHz
3	8µs	256kHz
4	16µs	128kHz
5	32µs	64kHz
6	64µs	32kHz
7	125µs	16kHz
8	250µs	8kHz
9	500µs	4kHz
10	1ms	2kHz
11	2ms	1kHz
12	4ms	500Hz
13	8ms	250Hz

Interval Register	Test Interval	Accuracy
14	16ms	125Hz
15	32ms	62.5Hz

2.15.5. Resus

It is possible to write software that inadvertently stops clk_sys. This will normally cause an unrecoverable lock-up of the cores and the on-chip debugger, leaving the user unable to trace the problem. To mitigate against that, an automatic resuscitation circuit is provided which will switch clk_sys to a known good clock source if no edges are detected over a user-defined interval. The known good source is clk_ref which can be driven from the XOSC, ROSC or an external source.

The resus block counts edges on clk_sys during a timeout interval controlled by clk_ref, and forces clk_sys to be driven from clk_ref if no clk_sys edges are detected. The interval is programmable via CLK_SYS_RESUS_CTRL.

WARNING

There is no way for resus to revive the chip if clk_ref is also stopped.

To enable the resus, the programmer must set the timeout interval and then set the ENABLE bit in CLK_SYS_RESUS_CTRL. To detect a resus event, the CLK_SYS_RESUS interrupt must be enabled by setting the interrupt enable bit in INTE. The CLOCKS_DEFAULT_IRQ (see Section 2.3.2) must also be enabled at the processor.

Resus is intended as a debugging aid. The intention is for the user to trace the software error that triggered the resus, then correct the error and reboot. It is possible to continue running after a resus event by reconfiguring clk_sys then clearing the resus by writing the CLEAR bit in CLK_SYS_RESUS_CTRL. However, it should be noted that a resus can be triggered by clk_sys running more slowly than expected and that could result in a clk_sys glitch when resus is triggered. That glitch could corrupt the chip. This would be a rare event but is tolerable in a debugging scenario. However it is unacceptable in normal operation therefore it is recommended to only use resus for debug.

WARNING

Resus is a debugging aid and should not be used as a means of switching clocks in normal operation.

2.15.6. Programmer's Model

2.15.6.1. Configuring a clock generator

The SDK defines an enum of clocks:

SDK: https://github.com/raspberrypi/pico-sdk/blob/master/src/rp2040/hardware_structs/include/hardware/structs/clocks.h Lines 30 - 42

```
30 typedef enum clock_num_rp2040 {
31     clk_gpout0 = 0, ///< Select CLK_GPOUT0 as clock source
32     clk_gpout1 = 1, ///< Select CLK_GPOUT1 as clock source
33     clk_gpout2 = 2, ///< Select CLK_GPOUT2 as clock source
34     clk_gpout3 = 3, ///< Select CLK_GPOUT3 as clock source
35     clk_ref = 4, ///< Select CLK_REF as clock source
36     clk_sys = 5, ///< Select CLK_SYS as clock source
37     clk_peri = 6, ///< Select CLK_PERI as clock source
38     clk_usb = 7, ///< Select CLK_USB as clock source
39     clk_adc = 8, ///< Select CLK_ADC as clock source
40     clk_rtc = 9, ///< Select CLK_RTC as clock source
41     CLK_COUNT
```

```
42 } clock_num_t;
```

And also a struct to describe the registers of a clock generator:

SDK: https://github.com/raspberrypi/pico-sdk/blob/master/src/rp2040/hardware_structs/include/hardware/structs/clocks.h Lines 100 - 121

```
100 typedef struct {
101     _REG_(CLOCKS_CLK_GPOUT0_CTRL_OFFSET) // CLOCKS_CLK_GPOUT0_CTRL
102     // Clock control, can be changed on-the-fly (except for auxsrc)
103     // 0x00100000 [20]    NUDGE        (0) An edge on this signal shifts the phase of the
    output by...
104     // 0x00030000 [17:16] PHASE        (0x0) This delays the enable signal by up to 3 cycles
    of the...
105     // 0x00001000 [12]    DC50         (0) Enables duty cycle correction for odd divisors
106     // 0x00000800 [11]    ENABLE       (0) Starts and stops the clock generator cleanly
107     // 0x00000400 [10]    KILL         (0) Asynchronously kills the clock generator
108     // 0x000001e0 [8:5]   AUXSRC       (0x0) Selects the auxiliary clock source, will glitch
    when switching
109     io_rw_32 ctrl;
110
111     _REG_(CLOCKS_CLK_GPOUT0_DIV_OFFSET) // CLOCKS_CLK_GPOUT0_DIV
112     // Clock divisor, can be changed on-the-fly
113     // 0xffffff00 [31:8]  INT          (0x000001) Integer component of the divisor, 0 ->
    divide by 2^16
114     // 0x000000ff [7:0]   FRAC         (0x00) Fractional component of the divisor
115     io_rw_32 div;
116
117     _REG_(CLOCKS_CLK_GPOUT0_SELECTED_OFFSET) // CLOCKS_CLK_GPOUT0_SELECTED
118     // Indicates which SRC is currently selected by the glitchless mux (one-hot)
119     // 0xffffffff [31:0]  CLK_GPOUT0_SELECTED (0x00000001) This slice does not have a
    glitchless mux (only the...
120     io_ro_32 selected;
121 } clock_hw_t;
```

To configure a clock, we need to know the following pieces of information:

- The frequency of the clock source
- The mux / aux mux position of the clock source
- The desired output frequency

The SDK provides `clock_configure` to configure a clock:

SDK: https://github.com/raspberrypi/pico-sdk/blob/master/src/rp2_common/hardware_clocks/clocks.c Lines 40 - 133

```
 40 static void clock_configure_internal(clock_handle_t clock, uint32_t src, uint32_t auxsrc,
    uint32_t actual_freq, uint32_t div) {
 41     clock_hw_t *clock_hw = &clocks_hw->clk[clock];
 42
 43     // If increasing divisor, set divisor before source. Otherwise set source
 44     // before divisor. This avoids a momentary overspeed when e.g. switching
 45     // to a faster source and increasing divisor to compensate.
 46     if (div > clock_hw->div)
 47         clock_hw->div = div;
 48
 49     // If switching a glitchless slice (ref or sys) to an aux source, switch
 50     // away from aux *first* to avoid passing glitches when changing aux mux.
 51     // Assume (!!!) glitchless source 0 is no faster than the aux source.
 52     if (has_glitchless_mux(clock) && src ==
    CLOCKS_CLK_SYS_CTRL_SRC_VALUE_CLKSRC_CLK_SYS_AUX) {
 53         hw_clear_bits(&clock_hw->ctrl, CLOCKS_CLK_REF_CTRL_SRC_BITS);
```

```
54          while (!(clock_hw->selected & 1u))
55              tight_loop_contents();
56      }
57      // If no glitchless mux, cleanly stop the clock to avoid glitches
58      // propagating when changing aux mux. Note it would be a really bad idea
59      // to do this on one of the glitchless clocks (clk_sys, clk_ref).
60      else {
61          // Disable clock. On clk_ref and clk_sys this does nothing,
62          // all other clocks have the ENABLE bit in the same position.
63          hw_clear_bits(&clock_hw->ctrl, CLOCKS_CLK_GPOUT0_CTRL_ENABLE_BITS);
64          if (configured_freq[clock] > 0) {
65              // Delay for 3 cycles of the target clock, for ENABLE propagation.
66              // Note XOSC_COUNT is not helpful here because XOSC is not
67              // necessarily running, nor is timer...
68              uint delay_cyc = configured_freq[clk_sys] / configured_freq[clock] + 1;
69              busy_wait_at_least_cycles(delay_cyc * 3);
70          }
71      }
72
73      // Set aux mux first, and then glitchless mux if this clock has one
74      hw_write_masked(&clock_hw->ctrl,
75          (auxsrc << CLOCKS_CLK_SYS_CTRL_AUXSRC_LSB),
76          CLOCKS_CLK_SYS_CTRL_AUXSRC_BITS
77      );
78
79      if (has_glitchless_mux(clock)) {
80          hw_write_masked(&clock_hw->ctrl,
81              src << CLOCKS_CLK_REF_CTRL_SRC_LSB,
82              CLOCKS_CLK_REF_CTRL_SRC_BITS
83          );
84          while (!(clock_hw->selected & (1u << src)))
85              tight_loop_contents();
86      }
87
88      // Enable clock. On clk_ref and clk_sys this does nothing,
89      // all other clocks have the ENABLE bit in the same position.
90      hw_set_bits(&clock_hw->ctrl, CLOCKS_CLK_GPOUT0_CTRL_ENABLE_BITS);
91
92      // Now that the source is configured, we can trust that the user-supplied
93      // divisor is a safe value.
94      clock_hw->div = div;
95      configured_freq[clock] = actual_freq;
96  }
97
98  bool clock_configure(clock_handle_t clock, uint32_t src, uint32_t auxsrc, uint32_t src_freq,
    uint32_t freq) {
99      assert(src_freq >= freq);
100
101     if (freq > src_freq)
102         return false;
103
104     uint64_t div64 =((((uint64_t) src_freq) << CLOCKS_CLK_GPOUT0_DIV_INT_LSB) / freq);
105     uint32_t div, actual_freq;
106     if (div64 >> 32) {
107         // set div to 0 for maximum clock divider
108         div = 0;
109         actual_freq = src_freq >> (32 - CLOCKS_CLK_GPOUT0_DIV_INT_LSB);
110     } else {
111         div = (uint32_t) div64;
112         // on RP2040 only clock divider of 1, or  >= 2 are supported
113         if (div < (2u << CLOCKS_CLK_GPOUT0_DIV_INT_LSB)) {
114             div = (1u << CLOCKS_CLK_GPOUT0_DIV_INT_LSB);
115         }
116         actual_freq = (uint32_t) ((((uint64_t) src_freq) << CLOCKS_CLK_GPOUT0_DIV_INT_LSB) /
```

```
    div);
117     }
118
119     clock_configure_internal(clock, src, auxsrc, actual_freq, div);
120     // Store the configured frequency
121     return true;
122 }
123
124 void clock_configure_int_divider(clock_handle_t clock, uint32_t src, uint32_t auxsrc,
uint32_t src_freq, uint32_t int_divider) {
125     clock_configure_internal(clock, src, auxsrc, src_freq / int_divider, int_divider <<
CLOCKS_CLK_GPOUT0_DIV_INT_LSB);
126 }
127
128 void clock_configure_undivided(clock_handle_t clock, uint32_t src, uint32_t auxsrc, uint32_t
src_freq) {
129     clock_configure_internal(clock, src, auxsrc, src_freq, 1u <<
CLOCKS_CLK_GPOUT0_DIV_INT_LSB);
130 }
```

It is called in `clocks_init` for each clock. The following example shows the `clk_sys` configuration:

SDK: https://github.com/raspberrypi/pico-sdk/blob/master/src/rp2_common/pico_runtime_init/runtime_init_clocks.c Lines 100 - 104

```
100         // CLK SYS = PLL SYS (usually) 125MHz / 1 = 125MHz
101         clock_configure_undivided(clk_sys,
102                         CLOCKS_CLK_SYS_CTRL_SRC_VALUE_CLKSRC_CLK_SYS_AUX,
103                         CLOCKS_CLK_SYS_CTRL_AUXSRC_VALUE_CLKSRC_PLL_SYS,
104                         SYS_CLK_HZ);
```

Once a clock is configured, `clock_get_hz` can be called to get the output frequency in Hz.

SDK: https://github.com/raspberrypi/pico-sdk/blob/master/src/rp2_common/hardware_clocks/clocks.c Lines 137 - 139

```
137 uint32_t clock_get_hz(clock_handle_t clock) {
138     return configured_freq[clock];
139 }
```

WARNING

It is assumed the source frequency the programmer provides is correct. If it is not then the frequency returned by `clock_get_hz` will be inaccurate.

2.15.6.2. Using the frequency counter

To use the frequency counter, the programmer must:

- Set the reference frequency: `clk_ref`
- Set the mux position of the source they want to measure. See FC0_SRC
- Wait for the `DONE` status bit in FC0_STATUS to be set
- Read the result

The SDK defines a `frequency_count` function which takes the source as an argument and returns the frequency in kHz:

SDK: https://github.com/raspberrypi/pico-sdk/blob/master/src/rp2_common/hardware_clocks/clocks.c Lines 147 - 174

```
147 uint32_t frequency_count_khz(uint src) {
148     fc_hw_t *fc = &clocks_hw->fc0;
149
150     // If frequency counter is running need to wait for it. It runs even if the source is NULL
151     while(fc->status & CLOCKS_FC0_STATUS_RUNNING_BITS) {
152         tight_loop_contents();
153     }
154
155     // Set reference freq
156     fc->ref_khz = clock_get_hz(clk_ref) / 1000;
157
158     // FIXME: Don't pick random interval. Use best interval
159     fc->interval = 10;
160
161     // No min or max
162     fc->min_khz = 0;
163     fc->max_khz = 0xffffffff;
164
165     // Set SRC which automatically starts the measurement
166     fc->src = src;
167
168     while(!(fc->status & CLOCKS_FC0_STATUS_DONE_BITS)) {
169         tight_loop_contents();
170     }
171
172     // Return the result
173     return fc->result >> CLOCKS_FC0_RESULT_KHZ_LSB;
174 }
```

There is also a wrapper function to change the unit to MHz:

SDK: https://github.com/raspberrypi/pico-sdk/blob/master/src/rp2_common/hardware_clocks/include/hardware/clocks.h Lines 377 - 379

```
377 static inline float frequency_count_mhz(uint src) {
378     return ((float) (frequency_count_khz(src))) / KHZ;
379 }
```

NOTE

The frequency counter can also be used in a test mode. This allows the hardware to check if the frequency is within a minimum frequency and a maximum frequency, set in FC0_MIN_KHZ and FC0_MAX_KHZ. In this mode, the PASS bit in FC0_STATUS will be set when DONE is set if the frequency is within the specified range. Otherwise, either the FAST or SLOW bit will be set.

If the programmer attempts to count a stopped clock, or the clock stops running then the DIED bit will be set. If any of DIED, FAST, or SLOW are set then FAIL will be set.

2.15.6.3. Configuring a GPIO output clock

SDK: https://github.com/raspberrypi/pico-sdk/blob/master/src/rp2_common/hardware_clocks/clocks.c Lines 245 - 276

```
245 void clock_gpio_init_int_frac16(uint gpio, uint src, uint32_t div_int, uint16_t div_frac16)
    {
246     // Bit messy but it's as much code to loop through a lookup
247     // table. The sources for each gpout generators are the same
```

```
248     // so just call with the sources from GP0
249     uint gpclk = 0;
250     if      (gpio == 21) gpclk = clk_gpout0;
251     else if (gpio == 23) gpclk = clk_gpout1;
252     else if (gpio == 24) gpclk = clk_gpout2;
253     else if (gpio == 25) gpclk = clk_gpout3;
254     else {
255         invalid_params_if(HARDWARE_CLOCKS, true);
256     }
257
258     invalid_params_if(HARDWARE_CLOCKS, div_int >> REG_FIELD_WIDTH(
    CLOCKS_CLK_GPOUT0_DIV_INT));
259     // Set up the gpclk generator
260     clocks_hw->clk[gpclk].ctrl = (src << CLOCKS_CLK_GPOUT0_CTRL_AUXSRC_LSB) |
261                                  CLOCKS_CLK_GPOUT0_CTRL_ENABLE_BITS;
262 #ifdef REG_FIELD_WIDTH(CLOCKS_CLK_GPOUT0_DIV_FRAC) == 16
263     clocks_hw->clk[gpclk].div = (div_int << CLOCKS_CLK_GPOUT0_DIV_INT_LSB) | (div_frac16 <<
    CLOCKS_CLK_GPOUT0_DIV_FRAC_LSB);
264 #elif REG_FIELD_WIDTH(CLOCKS_CLK_GPOUT0_DIV_FRAC) == 8
265     clocks_hw->clk[gpclk].div = (div_int << CLOCKS_CLK_GPOUT0_DIV_INT_LSB) | ((div_frac16
    >>8u) << CLOCKS_CLK_GPOUT0_DIV_FRAC_LSB);
266 #else
267 #error unsupported number of fractional bits
268 #endif
269
270     // Set gpio pin to gpclock function
271     gpio_set_function(gpio, GPIO_FUNC_GPCK);
272 }
```

2.15.6.4. Configuring a GPIO input clock

SDK: https://github.com/raspberrypi/pico-sdk/blob/master/src/rp2_common/hardware_clocks/clocks.c Lines 313 - 343

```
313 bool clock_configure_gpin(clock_handle_t clock, uint gpio, uint32_t src_freq, uint32_t freq)
    {
314     // Configure a clock to run from a GPIO input
315     uint gpin = 0;
316     if      (gpio == 20) gpin = 0;
317     else if (gpio == 22) gpin = 1;
318     else {
319         invalid_params_if(HARDWARE_CLOCKS, true);
320     }
321
322     // Work out sources. GPIN is always an auxsrc
323     uint src = 0;
324
325     // GPIN1 == GPIN0 + 1
326     uint auxsrc = gpin0_src[clock] + gpin;
327
328     if (has_glitchless_mux(clock)) {
329         // AUX src is always 1
330         src = 1;
331     }
332
333     // Set the GPIO function
334     gpio_set_function(gpio, GPIO_FUNC_GPCK);
335
336     // Now we have the src, auxsrc, and configured the gpio input
337     // call clock configure to run the clock from a gpio
338     return clock_configure(clock, src, auxsrc, src_freq, freq);
```

```
339 }
```

2.15.6.5. Enabling resus

SDK: https://github.com/raspberrypi/pico-sdk/blob/master/src/rp2_common/hardware_clocks/clocks.c Lines 221 - 243

```
221 void clocks_enable_resus(resus_callback_t resus_callback) {
222     // Restart clk_sys if it is stopped by forcing it
223     // to the default source of clk_ref. If clk_ref stops running this will
224     // not work.
225
226     // Store user's resus callback
227     _resus_callback = resus_callback;
228
229     irq_set_exclusive_handler(CLOCKS_IRQ, clocks_irq_handler);
230
231     // Enable the resus interrupt in clocks
232     clocks_hw->inte = CLOCKS_INTE_CLK_SYS_RESUS_BITS;
233
234     // Enable the clocks irq
235     irq_set_enabled(CLOCKS_IRQ, true);
236
237     // 2 * clk_ref freq / clk_sys_min_freq;
238     // assume clk_ref is 3MHz and we want clk_sys to be no lower than 1MHz
239     uint timeout = 2 * 3 * 1;
240
241     // Enable resus with the maximum timeout
242     clocks_hw->resus.ctrl = CLOCKS_CLK_SYS_RESUS_CTRL_ENABLE_BITS | timeout;
243 }
```

2.15.6.6. Configuring sleep mode

Sleep mode is active when neither processor core or the DMA are requesting clocks. For example, the DMA is not active and both *core0* and *core1* are waiting for an interrupt. The `SLEEP_EN` registers set what clocks are running in sleep mode. The hello_sleep example (https://github.com/raspberrypi/pico-playground/blob/master/sleep/hello_sleep/hello_sleep_aon.c) illustrates how to put the chip to sleep until the RTC fires. In this case, only the RTC clock is enabled in the SLEEP_EN0 register.

NOTE

`clk_sys` is always sent to `proc0` and `proc1` during sleep mode as some logic needs to be clocked for the processor to wake up again.

Pico Extras: https://github.com/raspberrypi/pico-extras/blob/master/src/rp2_common/pico_sleep/sleep.c Lines 159 - 183

```
159 void sleep_goto_sleep_until(struct timespec *ts, aon_timer_alarm_handler_t callback)
160 {
161
162     // We should have already called the sleep_run_from_dormant_source function
163     // This is only needed for dormancy although it saves power running from xosc while
    sleeping
164     //assert(dormant_source_valid(_dormant_source));
165
166     clocks_hw->sleep_en0 = CLOCKS_SLEEP_EN0_CLK_RTC_RTC_BITS;
167     clocks_hw->sleep_en1 = 0x0;
```

```
168
169     aon_timer_enable_alarm(ts, callback, false);
170
171     stdio_flush();
172
173     // Enable deep sleep at the proc
174     processor_deep_sleep();
175
176     // Go to sleep
177     __wfi();
178 }
```

2.15.7. List of Registers

The Clocks registers start at a base address of `0x40008000` (defined as CLOCKS_BASE in SDK).

Table 207. List of CLOCKS registers

Offset	Name	Info
0x00	CLK_GPOUT0_CTRL	Clock control, can be changed on-the-fly (except for auxsrc)
0x04	CLK_GPOUT0_DIV	Clock divisor, can be changed on-the-fly
0x08	CLK_GPOUT0_SELECTED	Indicates which SRC is currently selected by the glitchless mux (one-hot).
0x0c	CLK_GPOUT1_CTRL	Clock control, can be changed on-the-fly (except for auxsrc)
0x10	CLK_GPOUT1_DIV	Clock divisor, can be changed on-the-fly
0x14	CLK_GPOUT1_SELECTED	Indicates which SRC is currently selected by the glitchless mux (one-hot).
0x18	CLK_GPOUT2_CTRL	Clock control, can be changed on-the-fly (except for auxsrc)
0x1c	CLK_GPOUT2_DIV	Clock divisor, can be changed on-the-fly
0x20	CLK_GPOUT2_SELECTED	Indicates which SRC is currently selected by the glitchless mux (one-hot).
0x24	CLK_GPOUT3_CTRL	Clock control, can be changed on-the-fly (except for auxsrc)
0x28	CLK_GPOUT3_DIV	Clock divisor, can be changed on-the-fly
0x2c	CLK_GPOUT3_SELECTED	Indicates which SRC is currently selected by the glitchless mux (one-hot).
0x30	CLK_REF_CTRL	Clock control, can be changed on-the-fly (except for auxsrc)
0x34	CLK_REF_DIV	Clock divisor, can be changed on-the-fly
0x38	CLK_REF_SELECTED	Indicates which SRC is currently selected by the glitchless mux (one-hot).
0x3c	CLK_SYS_CTRL	Clock control, can be changed on-the-fly (except for auxsrc)
0x40	CLK_SYS_DIV	Clock divisor, can be changed on-the-fly
0x44	CLK_SYS_SELECTED	Indicates which SRC is currently selected by the glitchless mux (one-hot).
0x48	CLK_PERI_CTRL	Clock control, can be changed on-the-fly (except for auxsrc)
0x50	CLK_PERI_SELECTED	Indicates which SRC is currently selected by the glitchless mux (one-hot).

Offset	Name	Info
0x54	CLK_USB_CTRL	Clock control, can be changed on-the-fly (except for auxsrc)
0x58	CLK_USB_DIV	Clock divisor, can be changed on-the-fly
0x5c	CLK_USB_SELECTED	Indicates which SRC is currently selected by the glitchless mux (one-hot).
0x60	CLK_ADC_CTRL	Clock control, can be changed on-the-fly (except for auxsrc)
0x64	CLK_ADC_DIV	Clock divisor, can be changed on-the-fly
0x68	CLK_ADC_SELECTED	Indicates which SRC is currently selected by the glitchless mux (one-hot).
0x6c	CLK_RTC_CTRL	Clock control, can be changed on-the-fly (except for auxsrc)
0x70	CLK_RTC_DIV	Clock divisor, can be changed on-the-fly
0x74	CLK_RTC_SELECTED	Indicates which SRC is currently selected by the glitchless mux (one-hot).
0x78	CLK_SYS_RESUS_CTRL	
0x7c	CLK_SYS_RESUS_STATUS	
0x80	FC0_REF_KHZ	Reference clock frequency in kHz
0x84	FC0_MIN_KHZ	Minimum pass frequency in kHz. This is optional. Set to 0 if you are not using the pass/fail flags
0x88	FC0_MAX_KHZ	Maximum pass frequency in kHz. This is optional. Set to 0x1fffffff if you are not using the pass/fail flags
0x8c	FC0_DELAY	Delays the start of frequency counting to allow the mux to settle Delay is measured in multiples of the reference clock period
0x90	FC0_INTERVAL	The test interval is 0.98us * 2**interval, but let's call it 1us * 2**interval The default gives a test interval of 250us
0x94	FC0_SRC	Clock sent to frequency counter, set to 0 when not required Writing to this register initiates the frequency count
0x98	FC0_STATUS	Frequency counter status
0x9c	FC0_RESULT	Result of frequency measurement, only valid when status_done=1
0xa0	WAKE_EN0	enable clock in wake mode
0xa4	WAKE_EN1	enable clock in wake mode
0xa8	SLEEP_EN0	enable clock in sleep mode
0xac	SLEEP_EN1	enable clock in sleep mode
0xb0	ENABLED0	indicates the state of the clock enable
0xb4	ENABLED1	indicates the state of the clock enable
0xb8	INTR	Raw Interrupts
0xbc	INTE	Interrupt Enable
0xc0	INTF	Interrupt Force
0xc4	INTS	Interrupt status after masking & forcing

CLOCKS: CLK_GPOUT0_CTRL Register

Offset: 0x00

Description

Clock control, can be changed on-the-fly (except for auxsrc)

Table 208. CLK_GPOUT0_CTRL Register

Bits	Description	Type	Reset
31:21	Reserved.	-	-
20	**NUDGE**: An edge on this signal shifts the phase of the output by 1 cycle of the input clock This can be done at any time	RW	0x0
19:18	Reserved.	-	-
17:16	**PHASE**: This delays the enable signal by up to 3 cycles of the input clock This must be set before the clock is enabled to have any effect	RW	0x0
15:13	Reserved.	-	-
12	**DC50**: Enables duty cycle correction for odd divisors	RW	0x0
11	**ENABLE**: Starts and stops the clock generator cleanly	RW	0x0
10	**KILL**: Asynchronously kills the clock generator	RW	0x0
9	Reserved.	-	-
8:5	**AUXSRC**: Selects the auxiliary clock source, will glitch when switching	RW	0x0
	Enumerated values:		
	0x0 → CLKSRC_PLL_SYS		
	0x1 → CLKSRC_GPIN0		
	0x2 → CLKSRC_GPIN1		
	0x3 → CLKSRC_PLL_USB		
	0x4 → ROSC_CLKSRC		
	0x5 → XOSC_CLKSRC		
	0x6 → CLK_SYS		
	0x7 → CLK_USB		
	0x8 → CLK_ADC		
	0x9 → CLK_RTC		
	0xa → CLK_REF		
4:0	Reserved.	-	-

CLOCKS: CLK_GPOUT0_DIV Register

Offset: 0x04

Description

Clock divisor, can be changed on-the-fly

Table 209. CLK_GPOUT0_DIV Register

Bits	Description	Type	Reset
31:8	**INT**: Integer component of the divisor, 0 → divide by 2^16	RW	0x000001
7:0	**FRAC**: Fractional component of the divisor	RW	0x00

CLOCKS: CLK_GPOUT0_SELECTED Register

Offset: 0x08

Description

Indicates which SRC is currently selected by the glitchless mux (one-hot).

Table 210. CLK_GPOUT0_SELECTED Register

Bits	Description	Type	Reset
31:0	This slice does not have a glitchless mux (only the AUX_SRC field is present, not SRC) so this register is hardwired to 0x1.	RO	0x00000001

CLOCKS: CLK_GPOUT1_CTRL Register

Offset: 0x0c

Description

Clock control, can be changed on-the-fly (except for auxsrc)

Table 211. CLK_GPOUT1_CTRL Register

Bits	Description	Type	Reset
31:21	Reserved.	-	-
20	**NUDGE**: An edge on this signal shifts the phase of the output by 1 cycle of the input clock This can be done at any time	RW	0x0
19:18	Reserved.	-	-
17:16	**PHASE**: This delays the enable signal by up to 3 cycles of the input clock This must be set before the clock is enabled to have any effect	RW	0x0
15:13	Reserved.	-	-
12	**DC50**: Enables duty cycle correction for odd divisors	RW	0x0
11	**ENABLE**: Starts and stops the clock generator cleanly	RW	0x0
10	**KILL**: Asynchronously kills the clock generator	RW	0x0
9	Reserved.	-	-
8:5	**AUXSRC**: Selects the auxiliary clock source, will glitch when switching	RW	0x0
	Enumerated values:		
	0x0 → CLKSRC_PLL_SYS		
	0x1 → CLKSRC_GPIN0		
	0x2 → CLKSRC_GPIN1		
	0x3 → CLKSRC_PLL_USB		
	0x4 → ROSC_CLKSRC		
	0x5 → XOSC_CLKSRC		
	0x6 → CLK_SYS		
	0x7 → CLK_USB		

Bits	Description	Type	Reset
	0x8 → CLK_ADC		
	0x9 → CLK_RTC		
	0xa → CLK_REF		
4:0	Reserved.	-	-

CLOCKS: CLK_GPOUT1_DIV Register

Offset: 0x10

Description

Clock divisor, can be changed on-the-fly

Table 212. CLK_GPOUT1_DIV Register

Bits	Description	Type	Reset
31:8	**INT**: Integer component of the divisor, 0 → divide by 2^16	RW	0x000001
7:0	**FRAC**: Fractional component of the divisor	RW	0x00

CLOCKS: CLK_GPOUT1_SELECTED Register

Offset: 0x14

Description

Indicates which SRC is currently selected by the glitchless mux (one-hot).

Table 213. CLK_GPOUT1_SELECTED Register

Bits	Description	Type	Reset
31:0	This slice does not have a glitchless mux (only the AUX_SRC field is present, not SRC) so this register is hardwired to 0x1.	RO	0x00000001

CLOCKS: CLK_GPOUT2_CTRL Register

Offset: 0x18

Description

Clock control, can be changed on-the-fly (except for auxsrc)

Table 214. CLK_GPOUT2_CTRL Register

Bits	Description	Type	Reset
31:21	Reserved.	-	-
20	**NUDGE**: An edge on this signal shifts the phase of the output by 1 cycle of the input clock This can be done at any time	RW	0x0
19:18	Reserved.	-	-
17:16	**PHASE**: This delays the enable signal by up to 3 cycles of the input clock This must be set before the clock is enabled to have any effect	RW	0x0
15:13	Reserved.	-	-
12	**DC50**: Enables duty cycle correction for odd divisors	RW	0x0
11	**ENABLE**: Starts and stops the clock generator cleanly	RW	0x0
10	**KILL**: Asynchronously kills the clock generator	RW	0x0
9	Reserved.	-	-

Bits	Description	Type	Reset
8:5	**AUXSRC**: Selects the auxiliary clock source, will glitch when switching	RW	0x0
	Enumerated values:		
	0x0 → CLKSRC_PLL_SYS		
	0x1 → CLKSRC_GPIN0		
	0x2 → CLKSRC_GPIN1		
	0x3 → CLKSRC_PLL_USB		
	0x4 → ROSC_CLKSRC_PH		
	0x5 → XOSC_CLKSRC		
	0x6 → CLK_SYS		
	0x7 → CLK_USB		
	0x8 → CLK_ADC		
	0x9 → CLK_RTC		
	0xa → CLK_REF		
4:0	Reserved.	-	-

CLOCKS: CLK_GPOUT2_DIV Register

Offset: 0x1c

Description

Clock divisor, can be changed on-the-fly

Table 215. CLK_GPOUT2_DIV Register

Bits	Description	Type	Reset
31:8	**INT**: Integer component of the divisor, 0 → divide by 2^16	RW	0x000001
7:0	**FRAC**: Fractional component of the divisor	RW	0x00

CLOCKS: CLK_GPOUT2_SELECTED Register

Offset: 0x20

Description

Indicates which SRC is currently selected by the glitchless mux (one-hot).

Table 216. CLK_GPOUT2_SELECTED Register

Bits	Description	Type	Reset
31:0	This slice does not have a glitchless mux (only the AUX_SRC field is present, not SRC) so this register is hardwired to 0x1.	RO	0x00000001

CLOCKS: CLK_GPOUT3_CTRL Register

Offset: 0x24

Description

Clock control, can be changed on-the-fly (except for auxsrc)

Table 217. CLK_GPOUT3_CTRL Register

Bits	Description	Type	Reset
31:21	Reserved.	-	-

Bits	Description	Type	Reset
20	**NUDGE**: An edge on this signal shifts the phase of the output by 1 cycle of the input clock This can be done at any time	RW	0x0
19:18	Reserved.	-	-
17:16	**PHASE**: This delays the enable signal by up to 3 cycles of the input clock This must be set before the clock is enabled to have any effect	RW	0x0
15:13	Reserved.	-	-
12	**DC50**: Enables duty cycle correction for odd divisors	RW	0x0
11	**ENABLE**: Starts and stops the clock generator cleanly	RW	0x0
10	**KILL**: Asynchronously kills the clock generator	RW	0x0
9	Reserved.	-	-
8:5	**AUXSRC**: Selects the auxiliary clock source, will glitch when switching	RW	0x0
	Enumerated values:		
	0x0 → CLKSRC_PLL_SYS		
	0x1 → CLKSRC_GPIN0		
	0x2 → CLKSRC_GPIN1		
	0x3 → CLKSRC_PLL_USB		
	0x4 → ROSC_CLKSRC_PH		
	0x5 → XOSC_CLKSRC		
	0x6 → CLK_SYS		
	0x7 → CLK_USB		
	0x8 → CLK_ADC		
	0x9 → CLK_RTC		
	0xa → CLK_REF		
4:0	Reserved.	-	-

CLOCKS: CLK_GPOUT3_DIV Register

Offset: 0x28

Description

Clock divisor, can be changed on-the-fly

Table 218. CLK_GPOUT3_DIV Register

Bits	Description	Type	Reset
31:8	**INT**: Integer component of the divisor, 0 → divide by 2^16	RW	0x000001
7:0	**FRAC**: Fractional component of the divisor	RW	0x00

CLOCKS: CLK_GPOUT3_SELECTED Register

Offset: 0x2c

Description

Indicates which SRC is currently selected by the glitchless mux (one-hot).

Table 219. CLK_GPOUT3_SELECTED Register

Bits	Description	Type	Reset
31:0	This slice does not have a glitchless mux (only the AUX_SRC field is present, not SRC) so this register is hardwired to 0x1.	RO	0x00000001

CLOCKS: CLK_REF_CTRL Register

Offset: 0x30

Description

Clock control, can be changed on-the-fly (except for auxsrc)

Table 220. CLK_REF_CTRL Register

Bits	Description	Type	Reset
31:7	Reserved.	-	-
6:5	**AUXSRC**: Selects the auxiliary clock source, will glitch when switching	RW	0x0
	Enumerated values:		
	0x0 → CLKSRC_PLL_USB		
	0x1 → CLKSRC_GPIN0		
	0x2 → CLKSRC_GPIN1		
4:2	Reserved.	-	-
1:0	**SRC**: Selects the clock source glitchlessly, can be changed on-the-fly	RW	-
	Enumerated values:		
	0x0 → ROSC_CLKSRC_PH		
	0x1 → CLKSRC_CLK_REF_AUX		
	0x2 → XOSC_CLKSRC		

CLOCKS: CLK_REF_DIV Register

Offset: 0x34

Description

Clock divisor, can be changed on-the-fly

Table 221. CLK_REF_DIV Register

Bits	Description	Type	Reset
31:10	Reserved.	-	-
9:8	**INT**: Integer component of the divisor, 0 → divide by 2^16	RW	0x1
7:0	Reserved.	-	-

CLOCKS: CLK_REF_SELECTED Register

Offset: 0x38

Description

Indicates which SRC is currently selected by the glitchless mux (one-hot).

Table 222. CLK_REF_SELECTED Register

Bits	Description	Type	Reset
31:0	The glitchless multiplexer does not switch instantaneously (to avoid glitches), so software should poll this register to wait for the switch to complete. This register contains one decoded bit for each of the clock sources enumerated in the CTRL SRC field. At most one of these bits will be set at any time, indicating that clock is currently present at the output of the glitchless mux. Whilst switching is in progress, this register may briefly show all-0s.	RO	0x00000001

CLOCKS: CLK_SYS_CTRL Register

Offset: 0x3c

Description

Clock control, can be changed on-the-fly (except for auxsrc)

Table 223. CLK_SYS_CTRL Register

Bits	Description	Type	Reset
31:8	Reserved.	-	-
7:5	**AUXSRC**: Selects the auxiliary clock source, will glitch when switching	RW	0x0
	Enumerated values:		
	0x0 → CLKSRC_PLL_SYS		
	0x1 → CLKSRC_PLL_USB		
	0x2 → ROSC_CLKSRC		
	0x3 → XOSC_CLKSRC		
	0x4 → CLKSRC_GPIN0		
	0x5 → CLKSRC_GPIN1		
4:1	Reserved.	-	-
0	**SRC**: Selects the clock source glitchlessly, can be changed on-the-fly	RW	0x0
	Enumerated values:		
	0x0 → CLK_REF		
	0x1 → CLKSRC_CLK_SYS_AUX		

CLOCKS: CLK_SYS_DIV Register

Offset: 0x40

Description

Clock divisor, can be changed on-the-fly

Table 224. CLK_SYS_DIV Register

Bits	Description	Type	Reset
31:8	**INT**: Integer component of the divisor, 0 → divide by 2^16	RW	0x000001
7:0	**FRAC**: Fractional component of the divisor	RW	0x00

CLOCKS: CLK_SYS_SELECTED Register

Offset: 0x44

Description

Indicates which SRC is currently selected by the glitchless mux (one-hot).

Table 225. CLK_SYS_SELECTED Register

Bits	Description	Type	Reset
31:0	The glitchless multiplexer does not switch instantaneously (to avoid glitches), so software should poll this register to wait for the switch to complete. This register contains one decoded bit for each of the clock sources enumerated in the CTRL SRC field. At most one of these bits will be set at any time, indicating that clock is currently present at the output of the glitchless mux. Whilst switching is in progress, this register may briefly show all-0s.	RO	0x00000001

CLOCKS: CLK_PERI_CTRL Register

Offset: 0x48

Description

Clock control, can be changed on-the-fly (except for auxsrc)

Table 226. CLK_PERI_CTRL Register

Bits	Description	Type	Reset
31:12	Reserved.	-	-
11	**ENABLE**: Starts and stops the clock generator cleanly	RW	0x0
10	**KILL**: Asynchronously kills the clock generator	RW	0x0
9:8	Reserved.	-	-
7:5	**AUXSRC**: Selects the auxiliary clock source, will glitch when switching	RW	0x0
	Enumerated values:		
	0x0 → CLK_SYS		
	0x1 → CLKSRC_PLL_SYS		
	0x2 → CLKSRC_PLL_USB		
	0x3 → ROSC_CLKSRC_PH		
	0x4 → XOSC_CLKSRC		
	0x5 → CLKSRC_GPIN0		
	0x6 → CLKSRC_GPIN1		
4:0	Reserved.	-	-

CLOCKS: CLK_PERI_SELECTED Register

Offset: 0x50

Description

Indicates which SRC is currently selected by the glitchless mux (one-hot).

Table 227. CLK_PERI_SELECTED Register

Bits	Description	Type	Reset
31:0	This slice does not have a glitchless mux (only the AUX_SRC field is present, not SRC) so this register is hardwired to 0x1.	RO	0x00000001

CLOCKS: CLK_USB_CTRL Register

Offset: 0x54

Description

Clock control, can be changed on-the-fly (except for auxsrc)

Table 228. CLK_USB_CTRL Register

Bits	Description	Type	Reset
31:21	Reserved.	-	-
20	**NUDGE**: An edge on this signal shifts the phase of the output by 1 cycle of the input clock This can be done at any time	RW	0x0
19:18	Reserved.	-	-
17:16	**PHASE**: This delays the enable signal by up to 3 cycles of the input clock This must be set before the clock is enabled to have any effect	RW	0x0
15:12	Reserved.	-	-
11	**ENABLE**: Starts and stops the clock generator cleanly	RW	0x0
10	**KILL**: Asynchronously kills the clock generator	RW	0x0
9:8	Reserved.	-	-
7:5	**AUXSRC**: Selects the auxiliary clock source, will glitch when switching	RW	0x0
	Enumerated values:		
	0x0 → CLKSRC_PLL_USB		
	0x1 → CLKSRC_PLL_SYS		
	0x2 → ROSC_CLKSRC_PH		
	0x3 → XOSC_CLKSRC		
	0x4 → CLKSRC_GPIN0		
	0x5 → CLKSRC_GPIN1		
4:0	Reserved.	-	-

CLOCKS: CLK_USB_DIV Register

Offset: 0x58

Description

Clock divisor, can be changed on-the-fly

Table 229. CLK_USB_DIV Register

Bits	Description	Type	Reset
31:10	Reserved.	-	-
9:8	**INT**: Integer component of the divisor, 0 → divide by 2^16	RW	0x1
7:0	Reserved.	-	-

CLOCKS: CLK_USB_SELECTED Register

Offset: 0x5c

Description

Indicates which SRC is currently selected by the glitchless mux (one-hot).

Table 230. CLK_USB_SELECTED Register

Bits	Description	Type	Reset
31:0	This slice does not have a glitchless mux (only the AUX_SRC field is present, not SRC) so this register is hardwired to 0x1.	RO	0x00000001

CLOCKS: CLK_ADC_CTRL Register

Offset: 0x60

Description

Clock control, can be changed on-the-fly (except for auxsrc)

Table 231. CLK_ADC_CTRL Register

Bits	Description	Type	Reset
31:21	Reserved.	-	-
20	**NUDGE**: An edge on this signal shifts the phase of the output by 1 cycle of the input clock This can be done at any time	RW	0x0
19:18	Reserved.	-	-
17:16	**PHASE**: This delays the enable signal by up to 3 cycles of the input clock This must be set before the clock is enabled to have any effect	RW	0x0
15:12	Reserved.	-	-
11	**ENABLE**: Starts and stops the clock generator cleanly	RW	0x0
10	**KILL**: Asynchronously kills the clock generator	RW	0x0
9:8	Reserved.	-	-
7:5	**AUXSRC**: Selects the auxiliary clock source, will glitch when switching	RW	0x0
	Enumerated values:		
	0x0 → CLKSRC_PLL_USB		
	0x1 → CLKSRC_PLL_SYS		
	0x2 → ROSC_CLKSRC_PH		
	0x3 → XOSC_CLKSRC		
	0x4 → CLKSRC_GPIN0		
	0x5 → CLKSRC_GPIN1		
4:0	Reserved.	-	-

CLOCKS: CLK_ADC_DIV Register

Offset: 0x64

Description

Clock divisor, can be changed on-the-fly

Table 232. CLK_ADC_DIV Register

Bits	Description	Type	Reset
31:10	Reserved.	-	-
9:8	**INT**: Integer component of the divisor, 0 → divide by 2^16	RW	0x1
7:0	Reserved.	-	-

CLOCKS: CLK_ADC_SELECTED Register

Offset: 0x68

Description

Indicates which SRC is currently selected by the glitchless mux (one-hot).

Table 233. CLK_ADC_SELECTED Register

Bits	Description	Type	Reset
31:0	This slice does not have a glitchless mux (only the AUX_SRC field is present, not SRC) so this register is hardwired to 0x1.	RO	0x00000001

CLOCKS: CLK_RTC_CTRL Register

Offset: 0x6c

Description

Clock control, can be changed on-the-fly (except for auxsrc)

Table 234. CLK_RTC_CTRL Register

Bits	Description	Type	Reset
31:21	Reserved.	-	-
20	**NUDGE**: An edge on this signal shifts the phase of the output by 1 cycle of the input clock This can be done at any time	RW	0x0
19:18	Reserved.	-	-
17:16	**PHASE**: This delays the enable signal by up to 3 cycles of the input clock This must be set before the clock is enabled to have any effect	RW	0x0
15:12	Reserved.	-	-
11	**ENABLE**: Starts and stops the clock generator cleanly	RW	0x0
10	**KILL**: Asynchronously kills the clock generator	RW	0x0
9:8	Reserved.	-	-
7:5	**AUXSRC**: Selects the auxiliary clock source, will glitch when switching	RW	0x0
	Enumerated values:		
	0x0 → CLKSRC_PLL_USB		
	0x1 → CLKSRC_PLL_SYS		
	0x2 → ROSC_CLKSRC_PH		
	0x3 → XOSC_CLKSRC		
	0x4 → CLKSRC_GPIN0		
	0x5 → CLKSRC_GPIN1		
4:0	Reserved.	-	-

CLOCKS: CLK_RTC_DIV Register

Offset: 0x70

Description

Clock divisor, can be changed on-the-fly

Table 235. CLK_RTC_DIV Register

Bits	Description	Type	Reset
31:8	**INT**: Integer component of the divisor, 0 → divide by 2^16	RW	0x000001
7:0	**FRAC**: Fractional component of the divisor	RW	0x00

CLOCKS: CLK_RTC_SELECTED Register

Offset: 0x74

Description

Indicates which SRC is currently selected by the glitchless mux (one-hot).

Table 236. CLK_RTC_SELECTED Register

Bits	Description	Type	Reset
31:0	This slice does not have a glitchless mux (only the AUX_SRC field is present, not SRC) so this register is hardwired to 0x1.	RO	0x00000001

CLOCKS: CLK_SYS_RESUS_CTRL Register

Offset: 0x78

Table 237. CLK_SYS_RESUS_CTRL Register

Bits	Description	Type	Reset
31:17	Reserved.	-	-
16	**CLEAR**: For clearing the resus after the fault that triggered it has been corrected	RW	0x0
15:13	Reserved.	-	-
12	**FRCE**: Force a resus, for test purposes only	RW	0x0
11:9	Reserved.	-	-
8	**ENABLE**: Enable resus	RW	0x0
7:0	**TIMEOUT**: This is expressed as a number of clk_ref cycles and must be >= 2x clk_ref_freq/min_clk_tst_freq	RW	0xff

CLOCKS: CLK_SYS_RESUS_STATUS Register

Offset: 0x7c

Table 238. CLK_SYS_RESUS_STATUS Register

Bits	Description	Type	Reset
31:1	Reserved.	-	-
0	**RESUSSED**: Clock has been resuscitated, correct the error then send ctrl_clear=1	RO	0x0

CLOCKS: FC0_REF_KHZ Register

Offset: 0x80

Table 239. FC0_REF_KHZ Register

Bits	Description	Type	Reset
31:20	Reserved.	-	-
19:0	Reference clock frequency in kHz	RW	0x00000

CLOCKS: FC0_MIN_KHZ Register

Offset: 0x84

Table 240. FC0_MIN_KHZ Register

Bits	Description	Type	Reset
31:25	Reserved.	-	-
24:0	Minimum pass frequency in kHz. This is optional. Set to 0 if you are not using the pass/fail flags	RW	0x0000000

CLOCKS: FC0_MAX_KHZ Register

Offset: 0x88

Table 241. FC0_MAX_KHZ Register

Bits	Description	Type	Reset
31:25	Reserved.	-	-
24:0	Maximum pass frequency in kHz. This is optional. Set to 0x1ffffff if you are not using the pass/fail flags	RW	0x1ffffff

CLOCKS: FC0_DELAY Register

Offset: 0x8c

Table 242. FC0_DELAY Register

Bits	Description	Type	Reset
31:3	Reserved.	-	-
2:0	Delays the start of frequency counting to allow the mux to settle Delay is measured in multiples of the reference clock period	RW	0x1

CLOCKS: FC0_INTERVAL Register

Offset: 0x90

Table 243. FC0_INTERVAL Register

Bits	Description	Type	Reset
31:4	Reserved.	-	-
3:0	The test interval is 0.98us * 2**interval, but let's call it 1us * 2**interval The default gives a test interval of 250us	RW	0x8

CLOCKS: FC0_SRC Register

Offset: 0x94

Table 244. FC0_SRC Register

Bits	Description	Type	Reset
31:8	Reserved.	-	-
7:0	Clock sent to frequency counter, set to 0 when not required Writing to this register initiates the frequency count	RW	0x00
	Enumerated values:		
	0x00 → NULL		

Bits	Description	Type	Reset
	0x01 → PLL_SYS_CLKSRC_PRIMARY		
	0x02 → PLL_USB_CLKSRC_PRIMARY		
	0x03 → ROSC_CLKSRC		
	0x04 → ROSC_CLKSRC_PH		
	0x05 → XOSC_CLKSRC		
	0x06 → CLKSRC_GPIN0		
	0x07 → CLKSRC_GPIN1		
	0x08 → CLK_REF		
	0x09 → CLK_SYS		
	0x0a → CLK_PERI		
	0x0b → CLK_USB		
	0x0c → CLK_ADC		
	0x0d → CLK_RTC		

CLOCKS: FC0_STATUS Register

Offset: 0x98

Description

Frequency counter status

Table 245. FC0_STATUS Register

Bits	Description	Type	Reset
31:29	Reserved.	-	-
28	**DIED**: Test clock stopped during test	RO	0x0
27:25	Reserved.	-	-
24	**FAST**: Test clock faster than expected, only valid when status_done=1	RO	0x0
23:21	Reserved.	-	-
20	**SLOW**: Test clock slower than expected, only valid when status_done=1	RO	0x0
19:17	Reserved.	-	-
16	**FAIL**: Test failed	RO	0x0
15:13	Reserved.	-	-
12	**WAITING**: Waiting for test clock to start	RO	0x0
11:9	Reserved.	-	-
8	**RUNNING**: Test running	RO	0x0
7:5	Reserved.	-	-
4	**DONE**: Test complete	RO	0x0
3:1	Reserved.	-	-
0	**PASS**: Test passed	RO	0x0

CLOCKS: FC0_RESULT Register

Offset: 0x9c

Description

Result of frequency measurement, only valid when status_done=1

Table 246. FC0_RESULT Register

Bits	Description	Type	Reset
31:30	Reserved.	-	-
29:5	**KHZ**	RO	0x0000000
4:0	**FRAC**	RO	0x00

CLOCKS: WAKE_EN0 Register

Offset: 0xa0

Description

enable clock in wake mode

Table 247. WAKE_EN0 Register

Bits	Description	Type	Reset
31	**CLK_SYS_SRAM3**	RW	0x1
30	**CLK_SYS_SRAM2**	RW	0x1
29	**CLK_SYS_SRAM1**	RW	0x1
28	**CLK_SYS_SRAM0**	RW	0x1
27	**CLK_SYS_SPI1**	RW	0x1
26	**CLK_PERI_SPI1**	RW	0x1
25	**CLK_SYS_SPI0**	RW	0x1
24	**CLK_PERI_SPI0**	RW	0x1
23	**CLK_SYS_SIO**	RW	0x1
22	**CLK_SYS_RTC**	RW	0x1
21	**CLK_RTC_RTC**	RW	0x1
20	**CLK_SYS_ROSC**	RW	0x1
19	**CLK_SYS_ROM**	RW	0x1
18	**CLK_SYS_RESETS**	RW	0x1
17	**CLK_SYS_PWM**	RW	0x1
16	**CLK_SYS_PSM**	RW	0x1
15	**CLK_SYS_PLL_USB**	RW	0x1
14	**CLK_SYS_PLL_SYS**	RW	0x1
13	**CLK_SYS_PIO1**	RW	0x1
12	**CLK_SYS_PIO0**	RW	0x1
11	**CLK_SYS_PADS**	RW	0x1
10	**CLK_SYS_VREG_AND_CHIP_RESET**	RW	0x1
9	**CLK_SYS_JTAG**	RW	0x1
8	**CLK_SYS_IO**	RW	0x1

Bits	Description	Type	Reset
7	**CLK_SYS_I2C1**	RW	0x1
6	**CLK_SYS_I2C0**	RW	0x1
5	**CLK_SYS_DMA**	RW	0x1
4	**CLK_SYS_BUSFABRIC**	RW	0x1
3	**CLK_SYS_BUSCTRL**	RW	0x1
2	**CLK_SYS_ADC**	RW	0x1
1	**CLK_ADC_ADC**	RW	0x1
0	**CLK_SYS_CLOCKS**	RW	0x1

CLOCKS: WAKE_EN1 Register

Offset: 0xa4

Description

enable clock in wake mode

Table 248. WAKE_EN1 Register

Bits	Description	Type	Reset
31:15	Reserved.	-	-
14	**CLK_SYS_XOSC**	RW	0x1
13	**CLK_SYS_XIP**	RW	0x1
12	**CLK_SYS_WATCHDOG**	RW	0x1
11	**CLK_USB_USBCTRL**	RW	0x1
10	**CLK_SYS_USBCTRL**	RW	0x1
9	**CLK_SYS_UART1**	RW	0x1
8	**CLK_PERI_UART1**	RW	0x1
7	**CLK_SYS_UART0**	RW	0x1
6	**CLK_PERI_UART0**	RW	0x1
5	**CLK_SYS_TIMER**	RW	0x1
4	**CLK_SYS_TBMAN**	RW	0x1
3	**CLK_SYS_SYSINFO**	RW	0x1
2	**CLK_SYS_SYSCFG**	RW	0x1
1	**CLK_SYS_SRAM5**	RW	0x1
0	**CLK_SYS_SRAM4**	RW	0x1

CLOCKS: SLEEP_EN0 Register

Offset: 0xa8

Description

enable clock in sleep mode

Table 249. SLEEP_EN0 Register

Bits	Description	Type	Reset
31	**CLK_SYS_SRAM3**	RW	0x1

Bits	Description	Type	Reset
30	**CLK_SYS_SRAM2**	RW	0x1
29	**CLK_SYS_SRAM1**	RW	0x1
28	**CLK_SYS_SRAM0**	RW	0x1
27	**CLK_SYS_SPI1**	RW	0x1
26	**CLK_PERI_SPI1**	RW	0x1
25	**CLK_SYS_SPI0**	RW	0x1
24	**CLK_PERI_SPI0**	RW	0x1
23	**CLK_SYS_SIO**	RW	0x1
22	**CLK_SYS_RTC**	RW	0x1
21	**CLK_RTC_RTC**	RW	0x1
20	**CLK_SYS_ROSC**	RW	0x1
19	**CLK_SYS_ROM**	RW	0x1
18	**CLK_SYS_RESETS**	RW	0x1
17	**CLK_SYS_PWM**	RW	0x1
16	**CLK_SYS_PSM**	RW	0x1
15	**CLK_SYS_PLL_USB**	RW	0x1
14	**CLK_SYS_PLL_SYS**	RW	0x1
13	**CLK_SYS_PIO1**	RW	0x1
12	**CLK_SYS_PIO0**	RW	0x1
11	**CLK_SYS_PADS**	RW	0x1
10	**CLK_SYS_VREG_AND_CHIP_RESET**	RW	0x1
9	**CLK_SYS_JTAG**	RW	0x1
8	**CLK_SYS_IO**	RW	0x1
7	**CLK_SYS_I2C1**	RW	0x1
6	**CLK_SYS_I2C0**	RW	0x1
5	**CLK_SYS_DMA**	RW	0x1
4	**CLK_SYS_BUSFABRIC**	RW	0x1
3	**CLK_SYS_BUSCTRL**	RW	0x1
2	**CLK_SYS_ADC**	RW	0x1
1	**CLK_ADC_ADC**	RW	0x1
0	**CLK_SYS_CLOCKS**	RW	0x1

CLOCKS: SLEEP_EN1 Register

Offset: 0xac

Description

enable clock in sleep mode

Table 250. SLEEP_EN1 Register

Bits	Description	Type	Reset
31:15	Reserved.	-	-
14	**CLK_SYS_XOSC**	RW	0x1
13	**CLK_SYS_XIP**	RW	0x1
12	**CLK_SYS_WATCHDOG**	RW	0x1
11	**CLK_USB_USBCTRL**	RW	0x1
10	**CLK_SYS_USBCTRL**	RW	0x1
9	**CLK_SYS_UART1**	RW	0x1
8	**CLK_PERI_UART1**	RW	0x1
7	**CLK_SYS_UART0**	RW	0x1
6	**CLK_PERI_UART0**	RW	0x1
5	**CLK_SYS_TIMER**	RW	0x1
4	**CLK_SYS_TBMAN**	RW	0x1
3	**CLK_SYS_SYSINFO**	RW	0x1
2	**CLK_SYS_SYSCFG**	RW	0x1
1	**CLK_SYS_SRAM5**	RW	0x1
0	**CLK_SYS_SRAM4**	RW	0x1

CLOCKS: ENABLED0 Register

Offset: 0xb0

Description

indicates the state of the clock enable

Table 251. ENABLED0 Register

Bits	Description	Type	Reset
31	**CLK_SYS_SRAM3**	RO	0x0
30	**CLK_SYS_SRAM2**	RO	0x0
29	**CLK_SYS_SRAM1**	RO	0x0
28	**CLK_SYS_SRAM0**	RO	0x0
27	**CLK_SYS_SPI1**	RO	0x0
26	**CLK_PERI_SPI1**	RO	0x0
25	**CLK_SYS_SPI0**	RO	0x0
24	**CLK_PERI_SPI0**	RO	0x0
23	**CLK_SYS_SIO**	RO	0x0
22	**CLK_SYS_RTC**	RO	0x0
21	**CLK_RTC_RTC**	RO	0x0
20	**CLK_SYS_ROSC**	RO	0x0
19	**CLK_SYS_ROM**	RO	0x0
18	**CLK_SYS_RESETS**	RO	0x0

Bits	Description	Type	Reset
17	**CLK_SYS_PWM**	RO	0x0
16	**CLK_SYS_PSM**	RO	0x0
15	**CLK_SYS_PLL_USB**	RO	0x0
14	**CLK_SYS_PLL_SYS**	RO	0x0
13	**CLK_SYS_PIO1**	RO	0x0
12	**CLK_SYS_PIO0**	RO	0x0
11	**CLK_SYS_PADS**	RO	0x0
10	**CLK_SYS_VREG_AND_CHIP_RESET**	RO	0x0
9	**CLK_SYS_JTAG**	RO	0x0
8	**CLK_SYS_IO**	RO	0x0
7	**CLK_SYS_I2C1**	RO	0x0
6	**CLK_SYS_I2C0**	RO	0x0
5	**CLK_SYS_DMA**	RO	0x0
4	**CLK_SYS_BUSFABRIC**	RO	0x0
3	**CLK_SYS_BUSCTRL**	RO	0x0
2	**CLK_SYS_ADC**	RO	0x0
1	**CLK_ADC_ADC**	RO	0x0
0	**CLK_SYS_CLOCKS**	RO	0x0

CLOCKS: ENABLED1 Register

Offset: 0xb4

Description

indicates the state of the clock enable

Table 252. ENABLED1 Register

Bits	Description	Type	Reset
31:15	Reserved.	-	-
14	**CLK_SYS_XOSC**	RO	0x0
13	**CLK_SYS_XIP**	RO	0x0
12	**CLK_SYS_WATCHDOG**	RO	0x0
11	**CLK_USB_USBCTRL**	RO	0x0
10	**CLK_SYS_USBCTRL**	RO	0x0
9	**CLK_SYS_UART1**	RO	0x0
8	**CLK_PERI_UART1**	RO	0x0
7	**CLK_SYS_UART0**	RO	0x0
6	**CLK_PERI_UART0**	RO	0x0
5	**CLK_SYS_TIMER**	RO	0x0
4	**CLK_SYS_TBMAN**	RO	0x0

Bits	Description	Type	Reset
3	**CLK_SYS_SYSINFO**	RO	0x0
2	**CLK_SYS_SYSCFG**	RO	0x0
1	**CLK_SYS_SRAM5**	RO	0x0
0	**CLK_SYS_SRAM4**	RO	0x0

CLOCKS: INTR Register

Offset: 0xb8

Description

Raw Interrupts

Table 253. INTR Register

Bits	Description	Type	Reset
31:1	Reserved.	-	-
0	**CLK_SYS_RESUS**	RO	0x0

CLOCKS: INTE Register

Offset: 0xbc

Description

Interrupt Enable

Table 254. INTE Register

Bits	Description	Type	Reset
31:1	Reserved.	-	-
0	**CLK_SYS_RESUS**	RW	0x0

CLOCKS: INTF Register

Offset: 0xc0

Description

Interrupt Force

Table 255. INTF Register

Bits	Description	Type	Reset
31:1	Reserved.	-	-
0	**CLK_SYS_RESUS**	RW	0x0

CLOCKS: INTS Register

Offset: 0xc4

Description

Interrupt status after masking & forcing

Table 256. INTS Register

Bits	Description	Type	Reset
31:1	Reserved.	-	-
0	**CLK_SYS_RESUS**	RO	0x0

2.16. Crystal Oscillator (XOSC)

2.16.1. Overview

The Crystal Oscillator (XOSC) uses an external crystal to produce an accurate reference clock. The RP2040 supports 1MHz to 15MHz crystals and the RP2040 reference design (see the Minimal Design Example in Hardware design with RP2040) uses a 12MHz crystal. The reference clock is distributed to the PLLs, which can be used to multiply the XOSC frequency to provide accurate high speed clocks. For example, they can generate a 48MHz clock which meets the frequency accuracy requirement of the USB interface and a 133MHz maximum speed system clock. The XOSC clock is also a clock source for the clock generators, so can be used directly if required.

If the user already has an accurate clock source then it is possible to drive an external clock directly into XIN (aka XI), and disable the oscillator circuit. In this mode XIN can be driven at up to 50MHz.

If the user wants to use the XOSC clock outside the RP2040 then it must be routed out to a GPIO via a clk_gpout clock generator. It is not recommended to take it directly from XIN (aka XI) or XOUT (aka XO).

Figure 33. XOSC overview

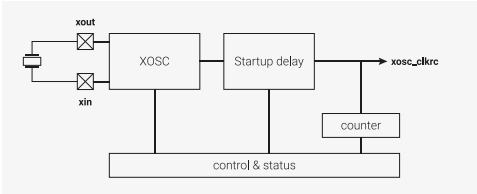

2.16.1.1. Recommended Crystals

For the best performance and stability across typical operating temperature ranges, it is recommended to use the Abracon ABM8-272-T3. You can source the ABM8-272-T3 directly from Abracon or from an authorised reseller. The Abracon ABM8-272-T3 has the following specifications:

Table 257. Key Crystal Specifications.

Parameters	Minimum	Typical	Maximum	Units	Notes
Center Frequency	12.000	12.000	12.000	MHz	
Operation Mode	Fundamental-AT	Fundamental-AT	Fundamental-AT		
Operating Temperature	-40		+85	°C	
Storage Temperature	-55		+125	°C	
Frequency Tolerance (25°C)	-30		+30	ppm	
Frequency Stability (25°C)	-30		+30	ppm	
Equivalent Series Resistance (R1)			50	Ω	
Shunt Capacitance (C0)			3.0	pF	
Load Capacitance (CL)	10	10	10	pF	
Drive Level		10	200	µW	
Aging	-5		+5	ppm	@25±3°C, 1st year

Parameters	Minimum	Typical	Maximum	Units	Notes
Insulation Resistance	500			MΩ	@100Vdc±15V

Even if you use a crystal with similar specifications, you will need to test the circuit over a range of temperatures to ensure stability.

The crystal oscillator is powered from the VDDIO voltage. As a result, the Abracon crystal and that particular damping resistor are tuned for 3.3V operation. If you use a different IO voltage, you will need to re-tune.

Any changes to crystal parameters risk instability across any components connected to the crystal circuit.

If you can't source the recommended crystal directly from Abracon or a reseller, contact applications@raspberrypi.com.

Raspberry Pi Pico has been specifically tuned for the specifications of the Abracon ABM8-272-T3 crystal. For an example of how to use a crystal with RP2040, see the Raspberry Pi Pico board schematic in Appendix B of the Raspberry Pi Pico Datasheet and the Raspberry Pi Pico design files.

2.16.2. Usage

The XOSC is disabled on chip startup and the RP2040 boots using the Ring Oscillator (ROSC). To start the XOSC, the programmer must set the CTRL_ENABLE register. The XOSC is not immediately usable because it takes time for the oscillations to build to sufficient amplitude. This time will be dependent on the chosen crystal but will be of the order of a few milliseconds. The XOSC incorporates a timer controlled by the STARTUP_DELAY register for automatically managing this and setting a flag (STATUS_STABLE) when the XOSC clock is usable.

2.16.3. Startup Delay

The STARTUP_DELAY register specifies how many clock cycles must be seen from the crystal before it can be used. This is specified in multiples of 256. The SDK `xosc_init` function sets this value. The 1ms default is sufficient for the RP2040 reference design (see the Minimal Design Example in Hardware design with RP2040) which runs the XOSC at 12MHz. When the timer expires, the STATUS_STABLE flag will be set to indicate the XOSC output can be used.

Before starting the XOSC the programmer must ensure the STARTUP_DELAY register is correctly configured. The required value can be calculated by:

$$(fCrystal \times tStable) \div 256$$

So with a 12MHz crystal and a 1ms wait time, the calculation is:

$$(12 \times 10^{6} \cdot 1 \times 10^{-3}) \div 256 \approx 47$$

NOTE

The value is rounded up to the nearest integer so the wait time will be just over 1ms

2.16.4. XOSC Counter

The COUNT register provides a method of managing short software delays. Writing a value to the COUNT register automatically triggers it to start counting down to zero at the XOSC frequency. The programmer then simply polls the register until it reaches zero. This is preferable to using NOPs in software loops because it is independent of the core clock frequency, the compiler and the execution time of the compiled code.

2.16.5. DORMANT mode

In DORMANT mode (see Section 2.11.3) all of the on-chip clocks can be paused to save power. This is particularly useful in battery-powered applications. The RP2040 is woken from DORMANT mode by an interrupt either from an external event such as an edge on a GPIO pin or from the on-chip RTC. This must be configured before entering DORMANT mode. If the RTC is being used to trigger wake-up then it must be clocked from an external source. To enter DORMANT mode the programmer must then switch all internal clocks to be driven from XOSC or ROSC and stop the PLLs. Then a specific 32-bit value must be written to the DORMANT register in the chosen oscillator (XOSC or ROSC) to stop it oscillating. When exiting DORMANT mode the chosen oscillator will restart. If XOSC is chosen then the frequency will be more precise but the restart time is longer due to the startup delay (>1ms on the RP2040 reference design (see the Minimal Design Example in Hardware design with RP2040)). If ROSC is chosen then the frequency is less precise but the start-up time is very short (approximately 1µs).

NOTE

The PLLs must be stopped before entering DORMANT mode

SDK: https://github.com/raspberrypi/pico-sdk/blob/master/src/rp2_common/hardware_xosc/xosc.c Lines 56 - 63

```
56 void xosc_dormant(void) {
57     // WARNING: This stops the xosc until woken up by an irq
58     xosc_hw->dormant = XOSC_DORMANT_VALUE_DORMANT;
59     // Wait for it to become stable once woken up
60     while(!(xosc_hw->status & XOSC_STATUS_STABLE_BITS)) {
61         tight_loop_contents();
62     }
63 }
```

WARNING

If no IRQ is configured before going into DORMANT mode the XOSC or ROSC will never restart.

See Section 2.11.5.2 for a complete example of DORMANT mode using the XOSC.

2.16.6. Programmer's Model

SDK: https://github.com/raspberrypi/pico-sdk/blob/master/src/rp2040/hardware_structs/include/hardware/structs/xosc.h Lines 27 - 59

```
27 typedef struct {
28     _REG_(XOSC_CTRL_OFFSET) // XOSC_CTRL
29     // Crystal Oscillator Control
30     // 0x00fff000 [23:12] ENABLE       (-) On power-up this field is initialised to DISABLE and
   the...
31     // 0x00000fff [11:0]  FREQ_RANGE   (-) Frequency range
32     io_rw_32 ctrl;
33
34     _REG_(XOSC_STATUS_OFFSET) // XOSC_STATUS
35     // Crystal Oscillator Status
36     // 0x80000000 [31]    STABLE       (0) Oscillator is running and stable
37     // 0x01000000 [24]    BADWRITE     (0) An invalid value has been written to CTRL_ENABLE
   or...
38     // 0x00001000 [12]    ENABLED      (-) Oscillator is enabled but not necessarily running
   and...
39     // 0x00000003 [1:0]   FREQ_RANGE   (-) The current frequency range setting, always reads 0
40     io_rw_32 status;
41
```

```
42     _REG_(XOSC_DORMANT_OFFSET) // XOSC_DORMANT
43     // Crystal Oscillator pause control
44     // 0xffffffff [31:0]  DORMANT      (-) This is used to save power by pausing the XOSC +
45     io_rw_32 dormant;
46
47     _REG_(XOSC_STARTUP_OFFSET) // XOSC_STARTUP
48     // Controls the startup delay
49     // 0x00100000 [20]    X4           (-) Multiplies the startup_delay by 4
50     // 0x00003fff [13:0]  DELAY        (-) in multiples of 256*xtal_period
51     io_rw_32 startup;
52
53     uint32_t _pad0[3];
54
55     _REG_(XOSC_COUNT_OFFSET) // XOSC_COUNT
56     // A down counter running at the XOSC frequency which counts to zero and stops.
57     // 0x000000ff [7:0]   COUNT        (0x00)
58     io_rw_32 count;
59 } xosc_hw_t;
```

SDK: https://github.com/raspberrypi/pico-sdk/blob/master/src/rp2_common/hardware_xosc/xosc.c Lines 29 - 43

```
29 void xosc_init(void) {
30     // Assumes 1-15 MHz input, checked above.
31     xosc_hw->ctrl = XOSC_CTRL_FREQ_RANGE_VALUE_1_15MHZ;
32
33     // Set xosc startup delay
34     xosc_hw->startup = STARTUP_DELAY;
35
36     // Set the enable bit now that we have set freq range and startup delay
37     hw_set_bits(&xosc_hw->ctrl, XOSC_CTRL_ENABLE_VALUE_ENABLE << XOSC_CTRL_ENABLE_LSB);
38
39     // Wait for XOSC to be stable
40     while(!(xosc_hw->status & XOSC_STATUS_STABLE_BITS)) {
41         tight_loop_contents();
42     }
43 }
```

2.16.7. List of Registers

The XOSC registers start at a base address of `0x40024000` (defined as XOSC_BASE in SDK).

Table 258. List of XOSC registers

Offset	Name	Info
0x00	CTRL	Crystal Oscillator Control
0x04	STATUS	Crystal Oscillator Status
0x08	DORMANT	Crystal Oscillator pause control
0x0c	STARTUP	Controls the startup delay
0x1c	COUNT	A down counter running at the XOSC frequency which counts to zero and stops.

XOSC: CTRL Register

Offset: 0x00

Description

Crystal Oscillator Control

Table 259. CTRL Register

Bits	Description	Type	Reset
31:24	Reserved.	-	-
23:12	**ENABLE**: On power-up this field is initialised to DISABLE and the chip runs from the ROSC. If the chip has subsequently been programmed to run from the XOSC then setting this field to DISABLE may lock-up the chip. If this is a concern then run the clk_ref from the ROSC and enable the clk_sys RESUS feature. The 12-bit code is intended to give some protection against accidental writes. An invalid setting will enable the oscillator.	RW	-
	Enumerated values:		
	0xd1e → DISABLE		
	0xfab → ENABLE		
11:0	**FREQ_RANGE**: Frequency range. This resets to 0xAA0 and cannot be changed.	RW	-
	Enumerated values:		
	0xaa0 → 1_15MHZ		
	0xaa1 → RESERVED_1		
	0xaa2 → RESERVED_2		
	0xaa3 → RESERVED_3		

XOSC: STATUS Register

Offset: 0x04

Description

Crystal Oscillator Status

Table 260. STATUS Register

Bits	Description	Type	Reset
31	**STABLE**: Oscillator is running and stable	RO	0x0
30:25	Reserved.	-	-
24	**BADWRITE**: An invalid value has been written to CTRL_ENABLE or CTRL_FREQ_RANGE or DORMANT	WC	0x0
23:13	Reserved.	-	-
12	**ENABLED**: Oscillator is enabled but not necessarily running and stable, resets to 0	RO	-
11:2	Reserved.	-	-
1:0	**FREQ_RANGE**: The current frequency range setting, always reads 0	RO	-
	Enumerated values:		
	0x0 → 1_15MHZ		
	0x1 → RESERVED_1		
	0x2 → RESERVED_2		
	0x3 → RESERVED_3		

XOSC: DORMANT Register

Offset: 0x08

Description

Crystal Oscillator pause control

Table 261. DORMANT Register

Bits	Description	Type	Reset
31:0	This is used to save power by pausing the XOSC On power-up this field is initialised to WAKE An invalid write will also select WAKE WARNING: stop the PLLs before selecting dormant mode WARNING: setup the irq before selecting dormant mode	RW	-
	Enumerated values:		
	0x636f6d61 → DORMANT		
	0x77616b65 → WAKE		

XOSC: STARTUP Register

Offset: 0x0c

Description

Controls the startup delay

Table 262. STARTUP Register

Bits	Description	Type	Reset
31:21	Reserved.	-	-
20	**X4**: Multiplies the startup_delay by 4. This is of little value to the user given that the delay can be programmed directly.	RW	0x0
19:14	Reserved.	-	-
13:0	**DELAY**: in multiples of 256*xtal_period. The reset value of 0xc4 corresponds to approx 50 000 cycles.	RW	0x00c4

XOSC: COUNT Register

Offset: 0x1c

Table 263. COUNT Register

Bits	Description	Type	Reset
31:8	Reserved.	-	-
7:0	A down counter running at the xosc frequency which counts to zero and stops. To start the counter write a non-zero value. Can be used for short software pauses when setting up time sensitive hardware.	RW	0x00

2.17. Ring Oscillator (ROSC)

2.17.1. Overview

The Ring Oscillator (ROSC) is an on-chip oscillator built from a ring of inverters. It requires no external components and is started automatically during RP2040 power up. It provides the clock to the cores during boot. The frequency of the

ROSC is programmable and it can directly provide a high speed clock to the cores, but the frequency varies with Process, Voltage and Temperature (PVT) so it cannot provide clocks for components which require an accurate frequency such as the RTC, USB and ADC. Methods for mitigating the frequency variation are discussed in Section 2.15 but these are only relevant to very low power design. For most applications requiring accurate clock frequencies it is recommended to switch to the XOSC and PLLs. During boot the ROSC runs at a nominal 6.5MHz and is guaranteed to be in the range 1.8MHz to 12MHz.

Once the chip has booted the programmer can choose to continue running from the ROSC and increase its frequency or start the Crystal Oscillator (XOSC) and PLLs. The ROSC can be disabled after the system clocks have been switched to the XOSC. Each oscillator has advantages and the programmer can switch between them to achieve the best solution for the application.

Figure 34. ROSC overview.

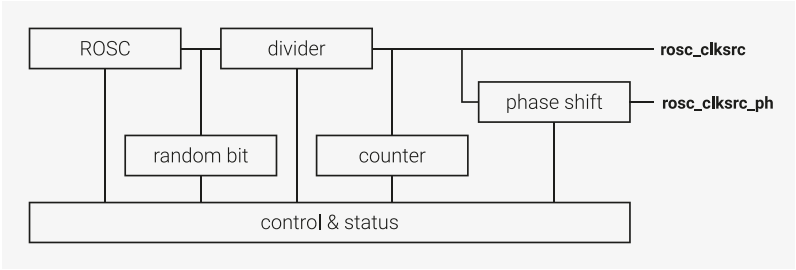

2.17.2. ROSC/XOSC trade-offs

The advantages of the ROSC are its flexibility and its low power. Also, there is no requirement for internal or external components when using the ROSC to provide clocks. Its frequency is programmable so it can be used to provide a fast core clock without starting the PLLs and can be divided by clock generators (Section 2.15) to generate slower peripheral clocks. The ROSC starts immediately and responds immediately to the frequency controls. It will retain the frequency setting when entering and exiting the DORMANT state (see Section 2.11.3). However, the user must be aware that the frequency may have drifted when exiting the DORMANT state due to changes in the supply voltage and the chip temperature.

The disadvantage of the ROSC is its frequency variation with PVT (Process, Voltage & Temperature) which makes it unsuitable for generating precise clocks or for applications where software execution timing is important. However, the PVT frequency variation can be exploited to provide automatic frequency scaling to maximise performance. This is discussed in Section 2.15.

The only advantage of the XOSC is its accurate frequency, but this is an overriding requirement in many applications.

The disadvantages of the XOSC are its requirement for external components (a crystal etc), its higher power consumption, slow startup time (>1ms) and fixed, low frequency. PLLs are required to produce higher frequency clocks. They consume more power and take significant time to start up and to change frequency. Exiting DORMANT mode is much slower than for ROSC because the XOSC must be restarted and the PLLs must be reconfigured.

2.17.3. Modifying the frequency

The ROSC is arranged as 8 stages, each with programmable drive. There are 2 methods of controlling the frequency. The frequency range controls the number of stages in the ROSC loop and the FREQA & FREQB registers control the drive strength of the stages.

The frequency range is changed by writing to the FREQ_RANGE register which controls the number of stages in the ROSC loop. The default LOW range has 8 (stages 0-7), MEDIUM has 6 (stages 2-7), HIGH has 4 (stages 4-7) and TOOHIGH has 2 (stages 6-7). It is recommended to change FREQ_RANGE one step at a time until the desired range is reached. The ROSC output will not glitch when increasing the frequency range, so the output clock can continue to be used. However, that is not true when going back down the frequency range. An alternate clock source must be selected for the modules clocked by ROSC, or they must be held in reset during the transition. The behaviour has not been fully characterised but the MEDIUM range will be approximately 1.33 times the LOW RANGE, the HIGH range will be 2 times

the LOW range and the TOOHIGH range will be 4 times the LOW range. The TOOHIGH range is aptly named. It should not be used because the internal logic of the ROSC will not run at that frequency.

The FREQA & FREQB registers control the drive strength of the stages in the ROSC loop. Increasing the drive strength reduces the delay through the stage and increases the oscillation frequency. Each stage has 3 drive strength control bits. Each bit turns on additional drive, therefore each stage has 4 drive strength settings equal to the number of bits set, with 0 being the default, 1 being double drive, 2 being triple drive and 3 being quadruple drive. Turning on extra drive will not have a linear effect on frequency, setting a second bit will have less impact than setting the first bit and so on. To ensure smooth transitions it is recommended to change one drive strength bit at a time. When FREQ_RANGE is used to shorten the ROSC loop, the bypassed stages still propagate the signal and therefore their drive strengths must be set to at least the same level as the lowest drive strength in the stages that are in the loop. This will not affect the oscillation frequency.

2.17.4. ROSC divider

The ROSC frequency is too fast to be used directly so is divided in an integer divider controlled by the DIV register. DIV can be changed while the ROSC is running, the output clock will change frequency without glitching. The default divisor is 16 which ensures the output clock is in the range 1.8 to 12MHz on chip startup.

The divider has 2 outputs, rosc_clksrc and rosc_clksrc_ph, the second being a phase shifted version of the first. This is primarily intended for use during product development and the outputs will be identical if the PHASE register is left in its default state.

2.17.5. Random Number Generator

If the system clocks are running from the XOSC and/or PLLs the ROSC can be used to generate random numbers. Simply enable the ROSC and read the RANDOMBIT register to get a 1-bit random number and read it n times to get an n-bit value. This does not meet the requirements of randomness for security systems because it can be compromised, but it may be useful in less critical applications. If the cores are running from the ROSC then the value will not be random because the timing of the register read will be correlated to the phase of the ROSC.

2.17.6. ROSC Counter

The COUNT register provides a method of managing short software delays. Writing a value to the COUNT register automatically triggers it to start counting down to zero at the ROSC frequency. The programmer then simply polls the register until it reaches zero. This is preferable to using NOPs in software loops because it is independent of the core clock frequency, the compiler and the execution time of the compiled code.

2.17.7. DORMANT mode

In DORMANT mode (see Section 2.11.3) all of the on-chip clocks can be paused to save power. This is particularly useful in battery-powered applications. The RP2040 is woken from DORMANT mode by an interrupt either from an external event such as an edge on a GPIO pin or from the on-chip RTC. This must be configured before entering DORMANT mode. If the RTC is being used to trigger wake-up then it must be clocked from an external source. To enter DORMANT mode the programmer must then switch all internal clocks to be driven from XOSC or ROSC and stop the PLLs. Then a specific 32-bit value must be written to the DORMANT register in the chosen oscillator (XOSC or ROSC) to stop it oscillating. When exiting DORMANT mode the chosen oscillator will restart. If XOSC is chosen then the frequency will be more precise but the restart time is longer due to the startup delay (>1ms on the RP2040 reference design (see the Minimal Design Example in Hardware design with RP2040)). If ROSC is chosen then the frequency is less precise but the start-up time is very short (approximately 1µs).

Pico Extras: https://github.com/raspberrypi/pico-extras/blob/master/src/rp2_common/hardware_rosc/rosc.c Lines 56 - 61

```
56 void rosc_set_dormant(void) {
57     // WARNING: This stops the rosc until woken up by an irq
58     rosc_write(&rosc_hw->dormant, ROSC_DORMANT_VALUE_DORMANT);
59     // Wait for it to become stable once woken up
60     while(!(rosc_hw->status & ROSC_STATUS_STABLE_BITS));
61 }
```

WARNING

If no IRQ is configured before going into dormant mode the ROSC will never restart.

See Section 2.11.5.2 for a some examples of dormant mode.

2.17.8. List of Registers

The ROSC registers start at a base address of `0x40060000` (defined as ROSC_BASE in SDK).

Table 264. List of ROSC registers

Offset	Name	Info
0x00	CTRL	Ring Oscillator control
0x04	FREQA	Ring Oscillator frequency control A
0x08	FREQB	Ring Oscillator frequency control B
0x0c	DORMANT	Ring Oscillator pause control
0x10	DIV	Controls the output divider
0x14	PHASE	Controls the phase shifted output
0x18	STATUS	Ring Oscillator Status
0x1c	RANDOMBIT	Returns a 1 bit random value
0x20	COUNT	A down counter running at the ROSC frequency which counts to zero and stops.

ROSC: CTRL Register

Offset: 0x00

Description

Ring Oscillator control

Table 265. CTRL Register

Bits	Description	Type	Reset
31:24	Reserved.	-	-
23:12	**ENABLE**: On power-up this field is initialised to ENABLE The system clock must be switched to another source before setting this field to DISABLE otherwise the chip will lock up The 12-bit code is intended to give some protection against accidental writes. An invalid setting will enable the oscillator.	RW	-
	Enumerated values:		
	0xd1e → DISABLE		
	0xfab → ENABLE		

Bits	Description	Type	Reset
11:0	**FREQ_RANGE**: Controls the number of delay stages in the ROSC ring LOW uses stages 0 to 7 MEDIUM uses stages 2 to 7 HIGH uses stages 4 to 7 TOOHIGH uses stages 6 to 7 and should not be used because its frequency exceeds design specifications The clock output will not glitch when changing the range up one step at a time The clock output will glitch when changing the range down Note: the values here are gray coded which is why HIGH comes before TOOHIGH	RW	0xaa0
	Enumerated values:		
	0xfa4 → LOW		
	0xfa5 → MEDIUM		
	0xfa7 → HIGH		
	0xfa6 → TOOHIGH		

ROSC: FREQA Register

Offset: 0x04

Description

The FREQA & FREQB registers control the frequency by controlling the drive strength of each stage
The drive strength has 4 levels determined by the number of bits set
Increasing the number of bits set increases the drive strength and increases the oscillation frequency
0 bits set is the default drive strength
1 bit set doubles the drive strength
2 bits set triples drive strength
3 bits set quadruples drive strength

Table 266. FREQA Register

Bits	Description	Type	Reset
31:16	**PASSWD**: Set to 0x9696 to apply the settings Any other value in this field will set all drive strengths to 0	RW	0x0000
	Enumerated values:		
	0x9696 → PASS		
15	Reserved.	-	-
14:12	**DS3**: Stage 3 drive strength	RW	0x0
11	Reserved.	-	-
10:8	**DS2**: Stage 2 drive strength	RW	0x0
7	Reserved.	-	-
6:4	**DS1**: Stage 1 drive strength	RW	0x0
3	Reserved.	-	-
2:0	**DS0**: Stage 0 drive strength	RW	0x0

ROSC: FREQB Register

Offset: 0x08

Description

For a detailed description see freqa register

Table 267. FREQB Register

Bits	Description	Type	Reset
31:16	**PASSWD**: Set to 0x9696 to apply the settings Any other value in this field will set all drive strengths to 0	RW	0x0000
	Enumerated values:		
	0x9696 → PASS		
15	Reserved.	-	-
14:12	**DS7**: Stage 7 drive strength	RW	0x0
11	Reserved.	-	-
10:8	**DS6**: Stage 6 drive strength	RW	0x0
7	Reserved.	-	-
6:4	**DS5**: Stage 5 drive strength	RW	0x0
3	Reserved.	-	-
2:0	**DS4**: Stage 4 drive strength	RW	0x0

ROSC: DORMANT Register

Offset: 0x0c

Description

Ring Oscillator pause control

Table 268. DORMANT Register

Bits	Description	Type	Reset
31:0	This is used to save power by pausing the ROSC On power-up this field is initialised to WAKE An invalid write will also select WAKE Warning: setup the irq before selecting dormant mode	RW	-
	Enumerated values:		
	0x636f6d61 → DORMANT		
	0x77616b65 → WAKE		

ROSC: DIV Register

Offset: 0x10

Description

Controls the output divider

Table 269. DIV Register

Bits	Description	Type	Reset
31:12	Reserved.	-	-
11:0	set to 0xaa0 + div where div = 0 divides by 32 div = 1-31 divides by div any other value sets div=31 this register resets to div=16	RW	-
	Enumerated values:		

Bits	Description	Type	Reset
	0xaa0 → PASS		

ROSC: PHASE Register

Offset: 0x14

Description

Controls the phase shifted output

Table 270. PHASE Register

Bits	Description	Type	Reset
31:12	Reserved.	-	-
11:4	**PASSWD**: set to 0xaa any other value enables the output with shift=0	RW	0x00
3	**ENABLE**: enable the phase-shifted output this can be changed on-the-fly	RW	0x1
2	**FLIP**: invert the phase-shifted output this is ignored when div=1	RW	0x0
1:0	**SHIFT**: phase shift the phase-shifted output by SHIFT input clocks this can be changed on-the-fly must be set to 0 before setting div=1	RW	0x0

ROSC: STATUS Register

Offset: 0x18

Description

Ring Oscillator Status

Table 271. STATUS Register

Bits	Description	Type	Reset
31	**STABLE**: Oscillator is running and stable	RO	0x0
30:25	Reserved.	-	-
24	**BADWRITE**: An invalid value has been written to CTRL_ENABLE or CTRL_FREQ_RANGE or FREQA or FREQB or DIV or PHASE or DORMANT	WC	0x0
23:17	Reserved.	-	-
16	**DIV_RUNNING**: post-divider is running this resets to 0 but transitions to 1 during chip startup	RO	-
15:13	Reserved.	-	-
12	**ENABLED**: Oscillator is enabled but not necessarily running and stable this resets to 0 but transitions to 1 during chip startup	RO	-
11:0	Reserved.	-	-

ROSC: RANDOMBIT Register

Offset: 0x1c

Table 272. RANDOMBIT Register

Bits	Description	Type	Reset
31:1	Reserved.	-	-

Bits	Description	Type	Reset
0	This just reads the state of the oscillator output so randomness is compromised if the ring oscillator is stopped or run at a harmonic of the bus frequency	RO	0x1

ROSC: COUNT Register

Offset: 0x20

Table 273. COUNT Register

Bits	Description	Type	Reset
31:8	Reserved.	-	-
7:0	A down counter running at the ROSC frequency which counts to zero and stops. To start the counter write a non-zero value. Can be used for short software pauses when setting up time sensitive hardware.	RW	0x00

2.18. PLL

2.18.1. Overview

The PLL is designed to take a reference clock, and multiply it using a VCO (Voltage Controlled Oscillator) with a feedback loop. The VCO must run at high frequencies (between 750 and 1600MHz), so there are two dividers, known as post dividers that can divide the VCO frequency before it is distributed to the clock generators on the chip.

There are two PLLs in RP2040. They are:

- `pll_sys` - Used to generate up to a 133MHz system clock
- `pll_usb` - Used to generate a 48MHz USB reference clock

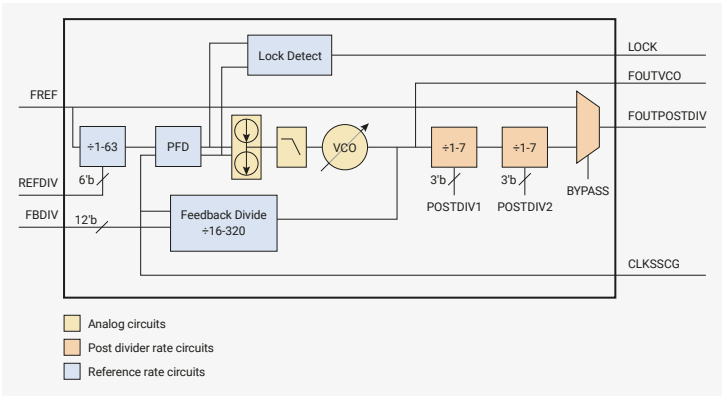

Figure 35. On both PLLs, the FREF (reference) input is connected to the crystal oscillator's XI input. The PLL contains a VCO, which is locked to a constant ratio of the reference clock via the feedback loop (phase-frequency detector and loop filter). This can synthesise very high frequencies, which may be divided down by the post-dividers.

2.18.2. Calculating PLL parameters

To configure the PLL, you must know the frequency of the reference clock, which on RP2040 is routed directly from the crystal oscillator. This will often be a 12MHz crystal, for compatibility with RP2040's USB bootrom. The PLL's final output frequency `FOUTPOSTDIV` can then be calculated as (`FREF` / `REFDIV`) × `FBDIV` / (`POSTDIV1` × `POSTDIV2`). With a desired output frequency in mind, you must select PLL parameters according to the following constraints of the PLL design:

- Minimum reference frequency (`FREF` / `REFDIV`) is 5MHz

- Oscillator frequency (FOUTVCO) must be in the range 750MHz → 1600MHz
- Feedback divider (FBDIV) must be in the range 16 → 320
- The post dividers POSTDIV1 and POSTDIV2 must be in the range 1 → 7
- Maximum input frequency (FREF / REFDIV) is VCO frequency divided by 16, due to minimum feedback divisor

Additionally, the maximum frequencies of the chip's clock generators (attached to FOUTPOSTDIV) must be respected. For the system PLL this is 133MHz, and for the USB PLL, 48MHz.

NOTE

The crystal oscillator on RP2040 is designed for crystals between 5 and 15MHz, so typically REFDIV should be 1. If the application circuit drives a faster reference directly into the XI input, and a low VCO frequency is desired, the reference divisor can be increased to keep the PLL input within a suitable range.

TIP

When two different values are required for POSTDIV1 and POSTDIV2, it's preferable to assign the higher value to POSTDIV1, for lower power consumption.

In the RP2040 reference design (see the Minimal Design Example in Hardware design with RP2040), which attaches a 12MHz crystal to the crystal oscillator, this implies that the minimum achievable and legal VCO frequency is 12MHz × 63 = 756MHz, and the maximum VCO is 12MHz × 133 = 1596MHz, so FBDIV must remain in the range 63 → 133. For example, setting FBDIV to 100 would synthesise a 1200MHz VCO frequency. A POSTDIV1 value of 6 and a POSTDIV2 value of 2 would divide this by 12 in total, producing a clean 100MHz at the PLL's final output.

2.18.2.1. Jitter vs Power Consumption

There are often several sets of PLL configuration parameters which achieve, or are very close to, the desired output frequency. It is up to the programmer to decide whether to prioritise low PLL power consumption, or lower *jitter*, which is cycle-to-cycle variation in the PLL's output clock period. This is not a concern as far as system stability is concerned, because RP2040's digital logic is designed with margin for the worst-case possible jitter on the system clock, but a highly accurate clock is often needed for audio and video applications, or where data is being transmitted and received in accordance with a specification. For example, the USB specification defines a maximum amount of allowable jitter.

Jitter is minimised by running the VCO at the highest possible frequency, so that higher post-divide values can be used. For example, 1500MHz VCO / 6 / 2 = 125MHz. To reduce power consumption, the VCO frequency should be as low as possible. For example: 750MHz VCO / 6 / 1 = 125MHz.

Another consideration here is that slightly adjusting the output frequency may allow a much lower VCO frequency to be achieved, by bringing the output to a closer rational multiple of the input. Indeed the exact desired frequency may not be exactly achievable with any allowable VCO frequency, or combination of divisors.

SDK provides a Python script that searches for the best VCO and post divider options for a desired output frequency:

SDK: https://github.com/raspberrypi/pico-sdk/blob/master/src/rp2_common/hardware_clocks/scripts/vcocalc.py

```
#!/usr/bin/env python3

import argparse
import sys

# Fixed hardware parameters
fbdiv_range = range(16, 320 + 1)
postdiv_range = range(1, 7 + 1)
ref_min = 5
refdiv_min = 1
refdiv_max = 63
```

```
12
13 def validRefdiv(string):
14     if ((int(string) < refdiv_min) or (int(string) > refdiv_max)):
15         raise ValueError("REFDIV must be in the range {} to {}".format(refdiv_min,
   refdiv_max))
16     return int(string)
17
18 parser = argparse.ArgumentParser(description="PLL parameter calculator")
19 parser.add_argument("--input", "-i", default=12, help="Input (reference) frequency. Default
   12 MHz", type=float)
20 parser.add_argument("--ref-min", default=5, help="Override minimum reference frequency.
   Default 5 MHz", type=float)
21 parser.add_argument("--vco-max", default=1600, help="Override maximum VCO frequency. Default
   1600 MHz", type=float)
22 parser.add_argument("--vco-min", default=750, help="Override minimum VCO frequency. Default
   750 MHz", type=float)
23 parser.add_argument("--cmake", action="store_true", help="Print out a CMake snippet to apply
   the selected PLL parameters to your program")
24 parser.add_argument("--cmake-only", action="store_true", help="Same as --cmake, but do not
   print anything other than the CMake output")
25 parser.add_argument("--cmake-executable-name", default="<program>", help="Set the executable
   name to use in the generated CMake output")
26 parser.add_argument("--lock-refdiv", help="Lock REFDIV to specified number in the range {} to
   {}".format(refdiv_min, refdiv_max), type=validRefdiv)
27 parser.add_argument("--low-vco", "-l", action="store_true", help="Use a lower VCO frequency
   when possible. This reduces power consumption, at the cost of increased jitter")
28 parser.add_argument("output", help="Output frequency in MHz.", type=float)
29 args = parser.parse_args()
30
31 refdiv_range = range(refdiv_min, max(refdiv_min, min(refdiv_max, int(args.input / args
   .ref_min))) + 1)
32 if args.lock_refdiv:
33     print("Locking REFDIV to", args.lock_refdiv)
34     refdiv_range = [args.lock_refdiv]
35
36 best = (0, 0, 0, 0, 0, 0)
37 best_margin = args.output
38
39 for refdiv in refdiv_range:
40     for fbdiv in fbdiv_range:
41         vco = args.input / refdiv * fbdiv
42         if vco < args.vco_min or vco > args.vco_max:
43             continue
44         # pd1 is inner loop so that we prefer higher ratios of pd1:pd2
45         for pd2 in postdiv_range:
46             for pd1 in postdiv_range:
47                 out = vco / pd1 / pd2
48                 margin = abs(out - args.output)
49                 vco_is_better = vco < best[5] if args.low_vco else vco > best[5]
50                 if ((vco * 1000) % (pd1 * pd2)):
51                     continue
52                 if margin < best_margin or (abs(margin - best_margin) < 1e-9 and
   vco_is_better):
53                     best = (out, fbdiv, pd1, pd2, refdiv, vco)
54                     best_margin = margin
55
56 best_out, best_fbdiv, best_pd1, best_pd2, best_refdiv, best_vco = best
57
58 if best[0] > 0:
59     cmake_output = \
60 f"""target_compile_definitions({args.cmake_executable_name} PRIVATE
61     PLL_SYS_REFDIV={best_refdiv}
62     PLL_SYS_VCO_FREQ_HZ={int((args.input * 1_000_000) / best_refdiv * best_fbdiv)}
63     PLL_SYS_POSTDIV1={best_pd1}
```

```
64      PLL_SYS_POSTDIV2={best_pd2}
65      SYS_CLK_HZ={int((args.input * 1_000_000) / (best_refdiv * best_pd1 * best_pd2) *
    best_fbdiv)}
66  )
67  """
68      if not args.cmake_only:
69          print("Requested: {} MHz".format(args.output))
70          print("Achieved:  {} MHz".format(best_out))
71          print("REFDIV:    {}".format(best_refdiv))
72          print("FBDIV:     {} (VCO = {} MHz)".format(best_fbdiv, args.input / best_refdiv *
    best_fbdiv))
73          print("PD1:       {}".format(best_pd1))
74          print("PD2:       {}".format(best_pd2))
75          if best_refdiv != 1:
76              print(
77                  "\nThis requires a non-default REFDIV value.\n"
78                  "Add the following to your CMakeLists.txt to apply the REFDIV:\n"
79              )
80          elif args.cmake or args.cmake_only:
81              print("")
82      if args.cmake or args.cmake_only or best_refdiv != 1:
83          print(cmake_output)
84  else:
85      sys.exit("No solution found")
```

Given an input and output frequency, this script will find the best possible set of PLL parameters to get as close as possible. Where multiple equally good combinations are found, it returns the parameters which yield the highest VCO frequency, for best output stability. The `-l` or `--low-vco` flag will instead prefer lower frequencies, for reduced power consumption.

Here a 48MHz output is requested:

```
$ ./vcocalc.py 48
Requested: 48.0 MHz
Achieved: 48.0 MHz
FBDIV: 120 (VCO = 1440 MHz)
PD1: 6
PD2: 5
```

Asking for a 48MHz output with a lower VCO frequency, if possible:

```
$ ./vcocalc.py -l 48
Requested: 48.0 MHz
Achieved: 48.0 MHz
FBDIV: 64 (VCO = 768 MHz)
PD1: 4
PD2: 4
```

For a 125MHz system clock with a 12MHz input, the minimum VCO frequency is quite high.

```
$ ./vcocalc.py -l 125
Requested: 125.0 MHz
Achieved: 125.0 MHz
FBDIV: 125 (VCO = 1500 MHz)
PD1: 6
```

```
PD2: 2
```

We can restrict the search to lower VCO frequencies, so that the script will consider looser frequency matches. Note that, whilst a 750MHz VCO would be ideal here, we can't achieve exactly 750MHz by multiplying the 12MHz input by an integer, which is why the previous invocation returned such a high VCO frequency.

```
$ ./vcocalc.py -l 125 --vco-max 800
Requested: 125.0 MHz
Achieved: 126.0 MHz
FBDIV: 63 (VCO = 756 MHz)
PD1: 6
PD2: 1
```

A 126MHz system clock may be a tolerable deviation from the desired 125MHz, and generating this clock consumes less power at the PLL.

2.18.3. Configuration

The SDK uses the following PLL settings:

SDK: https://github.com/raspberrypi/pico-sdk/blob/master/src/rp2_common/hardware_clocks/include/hardware/clocks.h Lines 143 - 164

```
143 // There are two PLLs in RP-series microcontrollers:
144 // 1. The 'SYS PLL' generates the system clock, the frequency is defined by `SYS_CLK_KHZ`.
145 // 2. The 'USB PLL' generates the USB clock, the frequency is defined by `USB_CLK_KHZ`.
146 //
147 // The two PLLs use the crystal oscillator output directly as their reference frequency input;
    the PLLs reference
148 // frequency cannot be reduced by the dividers present in the clocks block. The crystal
    frequency is defined by `XOSC_HZ` (or
149 // `XOSC_KHZ` or `XOSC_MHZ`).
150 //
151 // The system's default definitions are correct for the above frequencies with a 12MHz
152 // crystal frequency.  If different frequencies are required, these must be defined in
153 // the board configuration file together with the revised PLL settings
154 // Use `vcocalc.py` to check and calculate new PLL settings if you change any of these
    frequencies.
155 //
156 // Default PLL configuration RP2040:
157 //                   REF     FBDIV VCO            POSTDIV
158 // PLL SYS: 12 / 1 = 12MHz * 125 = 1500MHz / 6 / 2 = 125MHz
159 // PLL USB: 12 / 1 = 12MHz * 100 = 1200MHz / 5 / 5 =  48MHz
160 //
161 // Default PLL configuration RP2350:
162 //                   REF     FBDIV VCO            POSTDIV
163 // PLL SYS: 12 / 1 = 12MHz * 125 = 1500MHz / 5 / 2 = 150MHz
164 // PLL USB: 12 / 1 = 12MHz * 100 = 1200MHz / 5 / 5 =  48MHz
```

The `pll_init` function in the SDK, which we will examine below, asserts that all of these conditions are true before attempting to configure the PLL.

The SDK defines the PLL control registers as a struct. It then maps them into memory for each instance of the PLL.

SDK: https://github.com/raspberrypi/pico-sdk/blob/master/src/rp2040/hardware_structs/include/hardware/structs/pll.h Lines 27 - 53

```
27 typedef struct {
28     _REG_(PLL_CS_OFFSET) // PLL_CS
29     // Control and Status
30     // 0x80000000 [31]    LOCK         (0) PLL is locked
31     // 0x00000100 [8]     BYPASS       (0) Passes the reference clock to the output instead of
   the...
32     // 0x0000003f [5:0]   REFDIV       (0x01) Divides the PLL input reference clock
33     io_rw_32 cs;
34
35     _REG_(PLL_PWR_OFFSET) // PLL_PWR
36     // Controls the PLL power modes
37     // 0x00000020 [5]     VCOPD        (1) PLL VCO powerdown +
38     // 0x00000008 [3]     POSTDIVPD    (1) PLL post divider powerdown +
39     // 0x00000004 [2]     DSMPD        (1) PLL DSM powerdown +
40     // 0x00000001 [0]     PD           (1) PLL powerdown +
41     io_rw_32 pwr;
42
43     _REG_(PLL_FBDIV_INT_OFFSET) // PLL_FBDIV_INT
44     // Feedback divisor
45     // 0x00000fff [11:0]  FBDIV_INT    (0x000) see ctrl reg description for constraints
46     io_rw_32 fbdiv_int;
47
48     _REG_(PLL_PRIM_OFFSET) // PLL_PRIM
49     // Controls the PLL post dividers for the primary output
50     // 0x00070000 [18:16] POSTDIV1     (0x7) divide by 1-7
51     // 0x00007000 [14:12] POSTDIV2     (0x7) divide by 1-7
52     io_rw_32 prim;
53 } pll_hw_t;
```

The SDK defines `pll_init` which is used to configure, or reconfigure a PLL. It starts by clearing any previous power state in the PLL, then calculates the appropriate feedback divider value. There are assertions to check these values satisfy the constraints above.

SDK: https://github.com/raspberrypi/pico-sdk/blob/master/src/rp2_common/hardware_pll/pll.c Lines 13 - 21

```
13 void pll_init(PLL pll, uint refdiv, uint vco_freq, uint post_div1, uint post_div2) {
14     uint32_t ref_freq = XOSC_HZ / refdiv;
15
16     // Check vco freq is in an acceptable range
17     assert(vco_freq >= PICO_PLL_VCO_MIN_FREQ_HZ && vco_freq <= PICO_PLL_VCO_MAX_FREQ_HZ);
18
19     // What are we multiplying the reference clock by to get the vco freq
20     // (The regs are called div, because you divide the vco output and compare it to the
   refclk)
21     uint32_t fbdiv = vco_freq / ref_freq;
```

The programming sequence for the PLL is as follows:

- Program the reference clock divider (is a divide by 1 in the RP2040 case)
- Program the feedback divider
- Turn on the main power and VCO
- Wait for the VCO to lock (i.e. keep its output frequency stable)
- Set up post dividers and turn them on

SDK: https://github.com/raspberrypi/pico-sdk/blob/master/src/rp2_common/hardware_pll/pll.c Lines 42 - 69

```
42     if ((pll->cs & PLL_CS_LOCK_BITS) &&
43         (refdiv == (pll->cs & PLL_CS_REFDIV_BITS)) &&
44         (fbdiv  == (pll->fbdiv_int & PLL_FBDIV_INT_BITS)) &&
45         (pdiv   == (pll->prim & (PLL_PRIM_POSTDIV1_BITS | PLL_PRIM_POSTDIV2_BITS)))) {
46         // do not disrupt PLL that is already correctly configured and operating
47         return;
48     }
49
50     reset_unreset_block_num_wait_blocking(PLL_RESET_NUM(pll));
51
52     // Load VCO-related dividers before starting VCO
53     pll->cs = refdiv;
54     pll->fbdiv_int = fbdiv;
55
56     // Turn on PLL
57     uint32_t power = PLL_PWR_PD_BITS | // Main power
58                      PLL_PWR_VCOPD_BITS; // VCO Power
59
60     hw_clear_bits(&pll->pwr, power);
61
62     // Wait for PLL to lock
63     while (!(pll->cs & PLL_CS_LOCK_BITS)) tight_loop_contents();
64
65     // Set up post dividers
66     pll->prim = pdiv;
67
68     // Turn on post divider
69     hw_clear_bits(&pll->pwr, PLL_PWR_POSTDIVPD_BITS);
```

Note the VCO is turned on first, followed by the post dividers so the PLL does not output a dirty clock while the VCO is locking.

2.18.4. List of Registers

The PLL_SYS and PLL_USB registers start at base addresses of `0x40028000` and `0x4002c000` respectively (defined as PLL_SYS_BASE and PLL_USB_BASE in SDK).

Table 274. List of PLL registers

Offset	Name	Info
0x0	CS	Control and Status
0x4	PWR	Controls the PLL power modes.
0x8	FBDIV_INT	Feedback divisor
0xc	PRIM	Controls the PLL post dividers for the primary output

PLL: CS Register

Offset: 0x0

Description

Control and Status
GENERAL CONSTRAINTS:
Reference clock frequency min=5MHz, max=800MHz
Feedback divider min=16, max=320
VCO frequency min=750MHz, max=1600MHz

Table 275. CS Register

Bits	Description	Type	Reset
31	**LOCK**: PLL is locked	RO	0x0
30:9	Reserved.	-	-
8	**BYPASS**: Passes the reference clock to the output instead of the divided VCO. The VCO continues to run so the user can switch between the reference clock and the divided VCO but the output will glitch when doing so.	RW	0x0
7:6	Reserved.	-	-
5:0	**REFDIV**: Divides the PLL input reference clock. Behaviour is undefined for div=0. PLL output will be unpredictable during refdiv changes, wait for lock=1 before using it.	RW	0x01

PLL: PWR Register

Offset: 0x4

Description

Controls the PLL power modes.

Table 276. PWR Register

Bits	Description	Type	Reset
31:6	Reserved.	-	-
5	**VCOPD**: PLL VCO powerdown To save power set high when PLL output not required or bypass=1.	RW	0x1
4	Reserved.	-	-
3	**POSTDIVPD**: PLL post divider powerdown To save power set high when PLL output not required or bypass=1.	RW	0x1
2	**DSMPD**: PLL DSM powerdown Nothing is achieved by setting this low.	RW	0x1
1	Reserved.	-	-
0	**PD**: PLL powerdown To save power set high when PLL output not required.	RW	0x1

PLL: FBDIV_INT Register

Offset: 0x8

Description

Feedback divisor
(note: this PLL does not support fractional division)

Table 277. FBDIV_INT Register

Bits	Description	Type	Reset
31:12	Reserved.	-	-
11:0	see ctrl reg description for constraints	RW	0x000

PLL: PRIM Register

Offset: 0xc

Description

Controls the PLL post dividers for the primary output

(note: this PLL does not have a secondary output)
the primary output is driven from VCO divided by postdiv1*postdiv2

Table 278. PRIM Register

Bits	Description	Type	Reset
31:19	Reserved.	-	-
18:16	**POSTDIV1**: divide by 1-7	RW	0x7
15	Reserved.	-	-
14:12	**POSTDIV2**: divide by 1-7	RW	0x7
11:0	Reserved.	-	-

2.19. GPIO

2.19.1. Overview

RP2040 has 36 multi-functional General Purpose Input / Output (GPIO) pins, divided into two banks. In a typical use case, the pins in the QSPI bank (QSPI_SS, QSPI_SCLK and QSPI_SD0 to QSPI_SD3) are used to execute code from an external flash device, leaving the User bank (GPIO0 to GPIO29) for the programmer to use. All GPIOs support digital input and output, but GPIO26 to GPIO29 can also be used as inputs to the chip's Analogue to Digital Converter (ADC). Each GPIO can be controlled directly by software running on the processors, or by a number of other functional blocks.

The User GPIO bank supports the following functions:

- Software control via SIO (Single-Cycle IO) - Section 2.3.1.2, "GPIO Control"
- Programmable IO (PIO) - Chapter 3, *PIO*
- 2 × SPI - Section 4.4, "SPI"
- 2 × UART - Section 4.2, "UART"
- 2 × I2C (two-wire serial interface) - Section 4.3, "I2C"
- 8 × two-channel PWM - Section 4.5, "PWM"
- 2 × external clock inputs - Section 2.15.2.3, "External Clocks"
- 4 × general purpose clock output - Section 2.15, "Clocks"
- 4 × input to ADC - Section 4.9, "ADC and Temperature Sensor"
- USB VBUS management - Section 4.1.2.10, "VBUS Control"
- External interrupt requests, level or edge-sensitive

The QSPI bank supports the following functions:

- Software control via SIO (Single-Cycle IO) - Section 2.3.1.2, "GPIO Control"
- Flash execute in place (XIP) - Section 2.6.3, "Flash"

The logical structure of an example IO is shown in Figure 36.

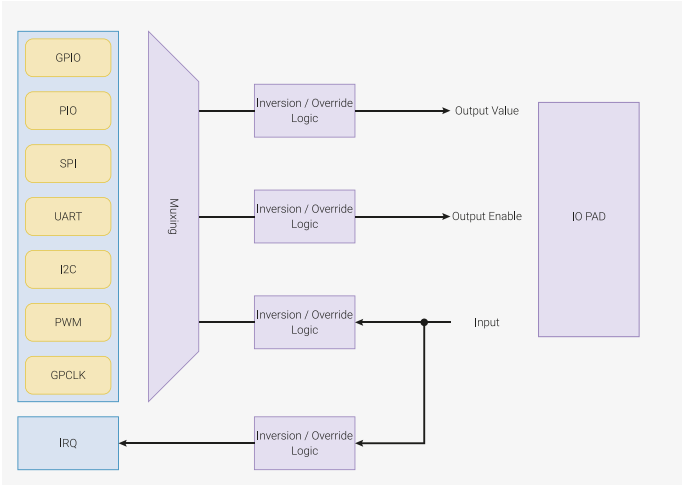

Figure 36. Logical structure of a GPIO. Each GPIO can be controlled by one of a number of peripherals, or by software control registers in the SIO. The function select (FSEL) selects which peripheral output is in control of the GPIO's direction and output level, and/or which peripheral input can see this GPIO's input level. These three signals (output level, output enable, input level) can also be inverted, or forced high or low, using the GPIO control registers.

2.19.2. Function Select

The function allocated to each GPIO is selected by writing to the `FUNCSEL` field in the GPIO's `CTRL` register. See GPIO0_CTRL as an example. The functions available on each IO are shown in Table 279 and Table 281.

Table 279. General Purpose Input/Output (GPIO) User Bank Functions

	Function								
GPIO	F1	F2	F3	F4	F5	F6	F7	F8	F9
0	SPI0 RX	UART0 TX	I2C0 SDA	PWM0 A	SIO	PIO0	PIO1		USB OVCUR DET
1	SPI0 CSn	UART0 RX	I2C0 SCL	PWM0 B	SIO	PIO0	PIO1		USB VBUS DET
2	SPI0 SCK	UART0 CTS	I2C1 SDA	PWM1 A	SIO	PIO0	PIO1		USB VBUS EN
3	SPI0 TX	UART0 RTS	I2C1 SCL	PWM1 B	SIO	PIO0	PIO1		USB OVCUR DET
4	SPI0 RX	UART1 TX	I2C0 SDA	PWM2 A	SIO	PIO0	PIO1		USB VBUS DET
5	SPI0 CSn	UART1 RX	I2C0 SCL	PWM2 B	SIO	PIO0	PIO1		USB VBUS EN
6	SPI0 SCK	UART1 CTS	I2C1 SDA	PWM3 A	SIO	PIO0	PIO1		USB OVCUR DET
7	SPI0 TX	UART1 RTS	I2C1 SCL	PWM3 B	SIO	PIO0	PIO1		USB VBUS DET
8	SPI1 RX	UART1 TX	I2C0 SDA	PWM4 A	SIO	PIO0	PIO1		USB VBUS EN
9	SPI1 CSn	UART1 RX	I2C0 SCL	PWM4 B	SIO	PIO0	PIO1		USB OVCUR DET
10	SPI1 SCK	UART1 CTS	I2C1 SDA	PWM5 A	SIO	PIO0	PIO1		USB VBUS DET
11	SPI1 TX	UART1 RTS	I2C1 SCL	PWM5 B	SIO	PIO0	PIO1		USB VBUS EN
12	SPI1 RX	UART0 TX	I2C0 SDA	PWM6 A	SIO	PIO0	PIO1		USB OVCUR DET
13	SPI1 CSn	UART0 RX	I2C0 SCL	PWM6 B	SIO	PIO0	PIO1		USB VBUS DET
14	SPI1 SCK	UART0 CTS	I2C1 SDA	PWM7 A	SIO	PIO0	PIO1		USB VBUS EN
15	SPI1 TX	UART0 RTS	I2C1 SCL	PWM7 B	SIO	PIO0	PIO1		USB OVCUR DET
16	SPI0 RX	UART0 TX	I2C0 SDA	PWM0 A	SIO	PIO0	PIO1		USB VBUS DET
17	SPI0 CSn	UART0 RX	I2C0 SCL	PWM0 B	SIO	PIO0	PIO1		USB VBUS EN
18	SPI0 SCK	UART0 CTS	I2C1 SDA	PWM1 A	SIO	PIO0	PIO1		USB OVCUR DET
19	SPI0 TX	UART0 RTS	I2C1 SCL	PWM1 B	SIO	PIO0	PIO1		USB VBUS DET
20	SPI0 RX	UART1 TX	I2C0 SDA	PWM2 A	SIO	PIO0	PIO1	CLOCK GPIN0	USB VBUS EN

	Function								
21	SPI0 CSn	UART1 RX	I2C0 SCL	PWM2 B	SIO	PIO0	PIO1	CLOCK GPOUT0	USB OVCUR DET
22	SPI0 SCK	UART1 CTS	I2C1 SDA	PWM3 A	SIO	PIO0	PIO1	CLOCK GPIN1	USB VBUS DET
23	SPI0 TX	UART1 RTS	I2C1 SCL	PWM3 B	SIO	PIO0	PIO1	CLOCK GPOUT1	USB VBUS EN
24	SPI1 RX	UART1 TX	I2C0 SDA	PWM4 A	SIO	PIO0	PIO1	CLOCK GPOUT2	USB OVCUR DET
25	SPI1 CSn	UART1 RX	I2C0 SCL	PWM4 B	SIO	PIO0	PIO1	CLOCK GPOUT3	USB VBUS DET
26	SPI1 SCK	UART1 CTS	I2C1 SDA	PWM5 A	SIO	PIO0	PIO1		USB VBUS EN
27	SPI1 TX	UART1 RTS	I2C1 SCL	PWM5 B	SIO	PIO0	PIO1		USB OVCUR DET
28	SPI1 RX	UART0 TX	I2C0 SDA	PWM6 A	SIO	PIO0	PIO1		USB VBUS DET
29	SPI1 CSn	UART0 RX	I2C0 SCL	PWM6 B	SIO	PIO0	PIO1		USB VBUS EN

Each GPIO can have one function selected at a time. Likewise, each peripheral input (e.g. UART0 RX) should only be selected on one *GPIO* at a time. If the same peripheral input is connected to multiple GPIOs, the peripheral sees the logical OR of these GPIO inputs.

Table 280. GPIO User Bank function descriptions

Function Name	Description
SPIx	Connect one of the internal PL022 SPI peripherals to GPIO
UARTx	Connect one of the internal PL011 UART peripherals to GPIO
I2Cx	Connect one of the internal DW I2C peripherals to GPIO
PWMx A/B	Connect a PWM slice to GPIO. There are eight PWM slices, each with two output channels (A/B). The B pin can also be used as an input, for frequency and duty cycle measurement.
SIO	Software control of GPIO, from the single-cycle IO (SIO) block. The SIO function (F5) must be selected for the processors to *drive* a GPIO, but the input is always connected, so software can check the state of GPIOs at any time.
PIOx	Connect one of the programmable IO blocks (PIO) to GPIO. PIO can implement a *wide* variety of interfaces, and has its own internal pin mapping hardware, allowing flexible placement of digital interfaces on user bank GPIOs. The PIO function (F6, F7) must be selected for PIO to *drive* a GPIO, but the input is always connected, so the PIOs can always see the state of all pins.
CLOCK GPINx	General purpose clock inputs. Can be routed to a number of internal clock domains on RP2040, e.g. to provide a 1Hz clock for the RTC, or can be connected to an internal frequency counter.
CLOCK GPOUTx	General purpose clock outputs. Can drive a number of internal clocks onto GPIOs, with optional integer divide.
USB OVCUR DET/VBUS DET/VBUS EN	USB power control signals to/from the internal USB controller

Table 281. General Purpose Input/Output (GPIO) QSPI Bank Functions

	Function									
IO	F0	F1	F2	F3	F4	F5	F6	F7	F8	F9
QSPI SCK	XIP SCK					SIO				
QSPI CSn	XIP CSn					SIO				
QSPI SD0	XIP SD0					SIO				

	Function									
QSPI SD1	XIP SD1					SIO				
QSPI SD2	XIP SD2					SIO				
QSPI SD3	XIP SD3					SIO				

Table 282. GPIO QSPI Bank function descriptions

Function Name	Description
XIP	Connection to the synchronous serial interface (SSI) inside the flash execute in place (XIP) subsystem. This allows processors to execute code directly from an external SPI, Dual-SPI or Quad-SPI flash
SIO	Software control of GPIO, from the single-cycle IO (SIO) block. The SIO function (`F5`) must be selected for the processors to *drive* a GPIO, but the input is always connected, so software can check the state of GPIOs at any time. The QSPI IOs are controlled via the `SIO_GPIO_HI_x` registers, and are mapped to register bits in the order SCK, CSn, SD0, SD1, SD2, SD3, starting at the LSB.

The six QSPI Bank GPIO pins are typically used by the XIP peripheral to communicate with an external flash device. However, there are two scenarios where the pins can be used as software-controlled GPIOs:

- If a SPI or Dual-SPI flash device is used for execute-in-place, then the SD2 and SD3 pins are not used for flash access, and can be used for other GPIO functions on the circuit board.
- If RP2040 is used in a flashless configuration (USB boot only), then all six pins can be used for software-controlled GPIO functions

2.19.3. Interrupts

An interrupt can be generated for every GPIO pin in four scenarios:

- Level High: the GPIO pin is a logical 1
- Level Low: the GPIO pin is a logical 0
- Edge High: the GPIO has transitioned from a logical 0 to a logical 1
- Edge Low: the GPIO has transitioned from a logical 1 to a logical 0

The level interrupts are not latched. This means that if the pin is a logical 1 and the level high interrupt is active, it will become inactive as soon as the pin changes to a logical 0. The edge interrupts are stored in the `INTR` register and can be cleared by writing to the `INTR` register.

There are enable, status, and force registers for three interrupt destinations: proc 0, proc 1, and dormant_wake. For proc 0 the registers are enable (PROC0_INTE0), status (PROC0_INTS0), and force (PROC0_INTF0). Dormant wake is used to wake the ROSC or XOSC up from dormant mode. See Section 2.11.5.2 for more information on dormant mode.

All interrupts are ORed together per-bank per-destination resulting in a total of six GPIO interrupts:

- IO bank 0 to dormant wake
- IO bank 0 to proc 0
- IO bank 0 to proc 1
- IO QSPI to dormant wake
- IO QSPI to proc 0
- IO QSPI to proc 1

This means the user can watch for several GPIO events at once.

2.19.4. Pads

Each GPIO is connected to the off-chip world via a "pad". Pads are the electrical interface between the chip's internal logic and external circuitry. They translate signal voltage levels, support higher currents and offer some protection against electrostatic discharge (ESD) events. Pad electrical behaviour can be adjusted to meet the requirements of the external circuitry. The following adjustments are available:

- Output drive strength can be set to 2mA, 4mA, 8mA or 12mA
- Output slew rate can be set to slow or fast
- Input hysteresis (schmitt trigger mode) can be enabled
- A pull-up or pull-down can be enabled, to set the output signal level when the output driver is disabled
- The input buffer can be disabled, to reduce current consumption when the pad is unused, unconnected or connected to an analogue signal.

An example pad is shown in Figure 37.

Figure 37. Diagram of a single IO pad.

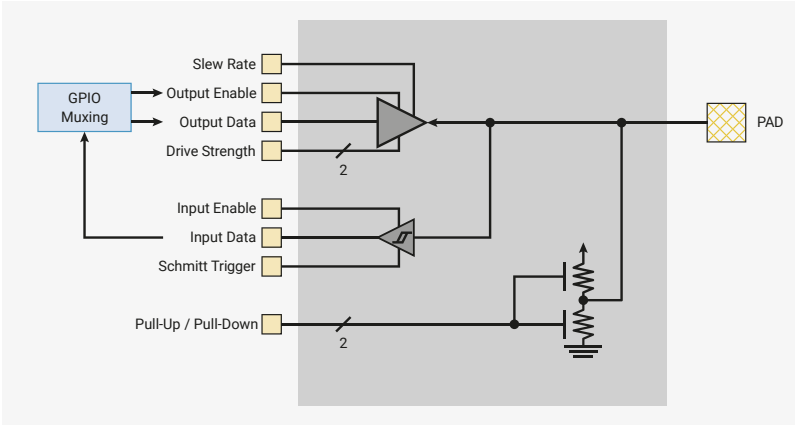

The pad's Output Enable, Output Data and Input Data ports are connected, via the IO mux, to the function controlling the pad. All other ports are controlled from the pad control register. The register also allows the pad's output driver to be disabled, by overriding the Output Enable signal from the function controlling the pad. See GPIO0 for an example of a pad control register.

Both the output signal level and acceptable input signal level at the pad are determined by the digital IO supply (IOVDD). IOVDD can be any nominal voltage between 1.8V and 3.3V, but to meet specification when powered at 1.8V, the pad input thresholds must be adjusted by writing a 1 to the pad `VOLTAGE_SELECT` registers. By default the pad input thresholds are valid for an IOVDD voltage between 2.5V and 3.3V. Using a voltage of 1.8V with the default input thresholds is a safe operating mode, though it will result in input thresholds that don't meet specification.

WARNING

Using IOVDD voltages greater than 1.8V, with the input thresholds set for 1.8V may result in damage to the chip.

Pad input threshold are adjusted on a per bank basis, with separate `VOLTAGE_SELECT` registers for the pads associated with the User IO bank (IO Bank 0) and the QSPI IO bank. However, both banks share the same digital IO supply (IOVDD), so both register should always be set to the same value.

Pad register details are available in Section 2.19.6.3, "Pad Control - User Bank" and Section 2.19.6.4, "Pad Control - QSPI Bank".

2.19.4.1. Bus Keeper Mode

For each pad, only the pull-up or the pull-down resistor can be enabled at any given time. It is impossible to enable both simultaneously. Instead, if you set both the GPIO0.PDE and GPIO0.PUE bits simultaneously then you enable **bus keeper**

mode, where the pad is:

- pulled up when its input is high, and
- pulled down when its input is low

When the output buffer is disabled, and the pad is not driven by any external source, this mode weakly retains the pad's current logical state. The pad does not float to mid-rail.

2.19.5. Software Examples

2.19.5.1. Select an IO function

An IO pin can perform many different functions and must be configured before use. For example, you may want it to be a `UART_TX` pin, or a `PWM` output. The SDK provides `gpio_set_function` for this purpose. Many SDK examples will call `gpio_set_function` at the beginning so that it can print to a UART.

The SDK starts by defining a structure to represent the registers of IO bank 0, the User IO bank. Each IO has a status register, followed by a control register. There are 30 IOs, so the structure containing a status and control register is instantiated as `io[30]` to repeat it 30 times.

SDK: https://github.com/raspberrypi/pico-sdk/blob/master/src/rp2040/hardware_structs/include/hardware/structs/io_bank0.h Lines 181 - 229

```
181 typedef struct {
182     io_bank0_status_ctrl_hw_t io[30];
183
184     // (Description copied from array index 0 register IO_BANK0_INTR0 applies similarly to
    other array indexes)
185     _REG_(IO_BANK0_INTR0_OFFSET) // IO_BANK0_INTR0
186     // Raw Interrupts
187     // 0x80000000 [31]    GPIO7_EDGE_HIGH (0)
188     // 0x40000000 [30]    GPIO7_EDGE_LOW (0)
189     // 0x20000000 [29]    GPIO7_LEVEL_HIGH (0)
190     // 0x10000000 [28]    GPIO7_LEVEL_LOW (0)
191     // 0x08000000 [27]    GPIO6_EDGE_HIGH (0)
192     // 0x04000000 [26]    GPIO6_EDGE_LOW (0)
193     // 0x02000000 [25]    GPIO6_LEVEL_HIGH (0)
194     // 0x01000000 [24]    GPIO6_LEVEL_LOW (0)
195     // 0x00800000 [23]    GPIO5_EDGE_HIGH (0)
196     // 0x00400000 [22]    GPIO5_EDGE_LOW (0)
197     // 0x00200000 [21]    GPIO5_LEVEL_HIGH (0)
198     // 0x00100000 [20]    GPIO5_LEVEL_LOW (0)
199     // 0x00080000 [19]    GPIO4_EDGE_HIGH (0)
200     // 0x00040000 [18]    GPIO4_EDGE_LOW (0)
201     // 0x00020000 [17]    GPIO4_LEVEL_HIGH (0)
202     // 0x00010000 [16]    GPIO4_LEVEL_LOW (0)
203     // 0x00008000 [15]    GPIO3_EDGE_HIGH (0)
204     // 0x00004000 [14]    GPIO3_EDGE_LOW (0)
205     // 0x00002000 [13]    GPIO3_LEVEL_HIGH (0)
206     // 0x00001000 [12]    GPIO3_LEVEL_LOW (0)
207     // 0x00000800 [11]    GPIO2_EDGE_HIGH (0)
208     // 0x00000400 [10]    GPIO2_EDGE_LOW (0)
209     // 0x00000200 [9]     GPIO2_LEVEL_HIGH (0)
210     // 0x00000100 [8]     GPIO2_LEVEL_LOW (0)
211     // 0x00000080 [7]     GPIO1_EDGE_HIGH (0)
212     // 0x00000040 [6]     GPIO1_EDGE_LOW (0)
213     // 0x00000020 [5]     GPIO1_LEVEL_HIGH (0)
214     // 0x00000010 [4]     GPIO1_LEVEL_LOW (0)
215     // 0x00000008 [3]     GPIO0_EDGE_HIGH (0)
216     // 0x00000004 [2]     GPIO0_EDGE_LOW (0)
```

```
217     // 0x00000002 [1]     GPIO0_LEVEL_HIGH (0)
218     // 0x00000001 [0]     GPIO0_LEVEL_LOW (0)
219     io_rw_32 intr[4];
220
221     union {
222         struct {
223             io_bank0_irq_ctrl_hw_t proc0_irq_ctrl;
224             io_bank0_irq_ctrl_hw_t proc1_irq_ctrl;
225             io_bank0_irq_ctrl_hw_t dormant_wake_irq_ctrl;
226         };
227         io_bank0_irq_ctrl_hw_t irq_ctrl[3];
228     };
229 } io_bank0_hw_t;
```

A similar structure is defined for the pad control registers for IO bank 1. By default, all pads come out of reset ready to use, with their input enabled and output disable set to 0. Regardless, `gpio_set_function` in the SDK sets these to make sure the pad is ready to use by the selected function. Finally, the desired function select is written to the IO control register (see GPIO0_CTRL for an example of an IO control register).

SDK: https://github.com/raspberrypi/pico-sdk/blob/master/src/rp2_common/hardware_gpio/gpio.c Lines 36 - 53

```
36 // Select function for this GPIO, and ensure input/output are enabled at the pad.
37 // This also clears the input/output/irq override bits.
38 void gpio_set_function(uint gpio, gpio_function_t fn) {
39     check_gpio_param(gpio);
40     invalid_params_if(HARDWARE_GPIO, ((uint32_t)fn << IO_BANK0_GPIO0_CTRL_FUNCSEL_LSB) &
   ~IO_BANK0_GPIO0_CTRL_FUNCSEL_BITS);
41     // Set input enable on, output disable off
42     hw_write_masked(&pads_bank0_hw->io[gpio],
43                     PADS_BANK0_GPIO0_IE_BITS,
44                     PADS_BANK0_GPIO0_IE_BITS | PADS_BANK0_GPIO0_OD_BITS
45     );
46     // Zero all fields apart from fsel; we want this IO to do what the peripheral tells it.
47     // This doesn't affect e.g. pullup/pulldown, as these are in pad controls.
48     io_bank0_hw->io[gpio].ctrl = fn << IO_BANK0_GPIO0_CTRL_FUNCSEL_LSB;
49 }
```

2.19.5.2. Enable a GPIO interrupt

The SDK provides a method of being interrupted when a GPIO pin changes state:

SDK: https://github.com/raspberrypi/pico-sdk/blob/master/src/rp2_common/hardware_gpio/gpio.c Lines 186 - 196

```
186 void gpio_set_irq_enabled(uint gpio, uint32_t events, bool enabled) {
187     // either this call disables the interrupt or callback should already be set.
188     // this protects against enabling the interrupt without callback set
189     assert(!enabled || irq_has_handler(IO_IRQ_BANK0));
190
191     // Separate mask/force/status per-core, so check which core called, and
192     // set the relevant IRQ controls.
193     io_bank0_irq_ctrl_hw_t *irq_ctrl_base = get_core_num() ?
194                                       &io_bank0_hw->proc1_irq_ctrl : &io_bank0_hw-
    >proc0_irq_ctrl;
195     _gpio_set_irq_enabled(gpio, events, enabled, irq_ctrl_base);
196 }
```

`gpio_set_irq_enabled` uses a lower level function `_gpio_set_irq_enabled`:

SDK: https://github.com/raspberrypi/pico-sdk/blob/master/src/rp2_common/hardware_gpio/gpio.c Lines 173 - 184

```
173 static void _gpio_set_irq_enabled(uint gpio, uint32_t events, bool enabled,
    io_bank0_irq_ctrl_hw_t *irq_ctrl_base) {
174     // Clear stale events which might cause immediate spurious handler entry
175     gpio_acknowledge_irq(gpio, events);
176
177     io_rw_32 *en_reg = &irq_ctrl_base->inte[gpio / 8];
178     events <<= 4 * (gpio % 8);
179
180     if (enabled)
181         hw_set_bits(en_reg, events);
182     else
183         hw_clear_bits(en_reg, events);
184 }
```

The user provides a pointer to a callback function that is called when the GPIO event happens. An example application that uses this system is hello_gpio_irq:

Pico Examples: https://github.com/raspberrypi/pico-examples/blob/master/gpio/hello_gpio_irq/hello_gpio_irq.c

```
 1 /**
 2  * Copyright (c) 2020 Raspberry Pi (Trading) Ltd.
 3  *
 4  * SPDX-License-Identifier: BSD-3-Clause
 5  */
 6
 7 #include <stdio.h>
 8 #include "pico/stdlib.h"
 9 #include "hardware/gpio.h"
10
11 #define GPIO_WATCH_PIN 2
12
13 static char event_str[128];
14
15 void gpio_event_string(char *buf, uint32_t events);
16
17 void gpio_callback(uint gpio, uint32_t events) {
18     // Put the GPIO event(s) that just happened into event_str
19     // so we can print it
20     gpio_event_string(event_str, events);
21     printf("GPIO %d %s\n", gpio, event_str);
22 }
23
24 int main() {
25     stdio_init_all();
26
27     printf("Hello GPIO IRQ\n");
28     gpio_init(GPIO_WATCH_PIN);
29     gpio_set_irq_enabled_with_callback(GPIO_WATCH_PIN, GPIO_IRQ_EDGE_RISE |
   GPIO_IRQ_EDGE_FALL, true, &gpio_callback);
30
31     // Wait forever
32     while (1);
33 }
34
35
36 static const char *gpio_irq_str[] = {
37         "LEVEL_LOW",  // 0x1
38         "LEVEL_HIGH", // 0x2
39         "EDGE_FALL",  // 0x4
40         "EDGE_RISE"   // 0x8
```

```
41 };
42
43 void gpio_event_string(char *buf, uint32_t events) {
44     for (uint i = 0; i < 4; i++) {
45         uint mask = (1 << i);
46         if (events & mask) {
47             // Copy this event string into the user string
48             const char *event_str = gpio_irq_str[i];
49             while (*event_str != '\0') {
50                 *buf++ = *event_str++;
51             }
52             events &= ~mask;
53
54             // If more events add ", "
55             if (events) {
56                 *buf++ = ',';
57                 *buf++ = ' ';
58             }
59         }
60     }
61     *buf++ = '\0';
62 }
```

2.19.6. List of Registers

2.19.6.1. IO - User Bank

The User Bank IO registers start at a base address of `0x40014000` (defined as IO_BANK0_BASE in SDK).

Table 283. List of IO_BANK0 registers

Offset	Name	Info
0x000	GPIO0_STATUS	GPIO status
0x004	GPIO0_CTRL	GPIO control including function select and overrides.
0x008	GPIO1_STATUS	GPIO status
0x00c	GPIO1_CTRL	GPIO control including function select and overrides.
0x010	GPIO2_STATUS	GPIO status
0x014	GPIO2_CTRL	GPIO control including function select and overrides.
0x018	GPIO3_STATUS	GPIO status
0x01c	GPIO3_CTRL	GPIO control including function select and overrides.
0x020	GPIO4_STATUS	GPIO status
0x024	GPIO4_CTRL	GPIO control including function select and overrides.
0x028	GPIO5_STATUS	GPIO status
0x02c	GPIO5_CTRL	GPIO control including function select and overrides.
0x030	GPIO6_STATUS	GPIO status
0x034	GPIO6_CTRL	GPIO control including function select and overrides.
0x038	GPIO7_STATUS	GPIO status
0x03c	GPIO7_CTRL	GPIO control including function select and overrides.
0x040	GPIO8_STATUS	GPIO status

Offset	Name	Info
0x044	GPIO8_CTRL	GPIO control including function select and overrides.
0x048	GPIO9_STATUS	GPIO status
0x04c	GPIO9_CTRL	GPIO control including function select and overrides.
0x050	GPIO10_STATUS	GPIO status
0x054	GPIO10_CTRL	GPIO control including function select and overrides.
0x058	GPIO11_STATUS	GPIO status
0x05c	GPIO11_CTRL	GPIO control including function select and overrides.
0x060	GPIO12_STATUS	GPIO status
0x064	GPIO12_CTRL	GPIO control including function select and overrides.
0x068	GPIO13_STATUS	GPIO status
0x06c	GPIO13_CTRL	GPIO control including function select and overrides.
0x070	GPIO14_STATUS	GPIO status
0x074	GPIO14_CTRL	GPIO control including function select and overrides.
0x078	GPIO15_STATUS	GPIO status
0x07c	GPIO15_CTRL	GPIO control including function select and overrides.
0x080	GPIO16_STATUS	GPIO status
0x084	GPIO16_CTRL	GPIO control including function select and overrides.
0x088	GPIO17_STATUS	GPIO status
0x08c	GPIO17_CTRL	GPIO control including function select and overrides.
0x090	GPIO18_STATUS	GPIO status
0x094	GPIO18_CTRL	GPIO control including function select and overrides.
0x098	GPIO19_STATUS	GPIO status
0x09c	GPIO19_CTRL	GPIO control including function select and overrides.
0x0a0	GPIO20_STATUS	GPIO status
0x0a4	GPIO20_CTRL	GPIO control including function select and overrides.
0x0a8	GPIO21_STATUS	GPIO status
0x0ac	GPIO21_CTRL	GPIO control including function select and overrides.
0x0b0	GPIO22_STATUS	GPIO status
0x0b4	GPIO22_CTRL	GPIO control including function select and overrides.
0x0b8	GPIO23_STATUS	GPIO status
0x0bc	GPIO23_CTRL	GPIO control including function select and overrides.
0x0c0	GPIO24_STATUS	GPIO status
0x0c4	GPIO24_CTRL	GPIO control including function select and overrides.
0x0c8	GPIO25_STATUS	GPIO status
0x0cc	GPIO25_CTRL	GPIO control including function select and overrides.
0x0d0	GPIO26_STATUS	GPIO status

Offset	Name	Info
0x0d4	GPIO26_CTRL	GPIO control including function select and overrides.
0x0d8	GPIO27_STATUS	GPIO status
0x0dc	GPIO27_CTRL	GPIO control including function select and overrides.
0x0e0	GPIO28_STATUS	GPIO status
0x0e4	GPIO28_CTRL	GPIO control including function select and overrides.
0x0e8	GPIO29_STATUS	GPIO status
0x0ec	GPIO29_CTRL	GPIO control including function select and overrides.
0x0f0	INTR0	Raw Interrupts
0x0f4	INTR1	Raw Interrupts
0x0f8	INTR2	Raw Interrupts
0x0fc	INTR3	Raw Interrupts
0x100	PROC0_INTE0	Interrupt Enable for proc0
0x104	PROC0_INTE1	Interrupt Enable for proc0
0x108	PROC0_INTE2	Interrupt Enable for proc0
0x10c	PROC0_INTE3	Interrupt Enable for proc0
0x110	PROC0_INTF0	Interrupt Force for proc0
0x114	PROC0_INTF1	Interrupt Force for proc0
0x118	PROC0_INTF2	Interrupt Force for proc0
0x11c	PROC0_INTF3	Interrupt Force for proc0
0x120	PROC0_INTS0	Interrupt status after masking & forcing for proc0
0x124	PROC0_INTS1	Interrupt status after masking & forcing for proc0
0x128	PROC0_INTS2	Interrupt status after masking & forcing for proc0
0x12c	PROC0_INTS3	Interrupt status after masking & forcing for proc0
0x130	PROC1_INTE0	Interrupt Enable for proc1
0x134	PROC1_INTE1	Interrupt Enable for proc1
0x138	PROC1_INTE2	Interrupt Enable for proc1
0x13c	PROC1_INTE3	Interrupt Enable for proc1
0x140	PROC1_INTF0	Interrupt Force for proc1
0x144	PROC1_INTF1	Interrupt Force for proc1
0x148	PROC1_INTF2	Interrupt Force for proc1
0x14c	PROC1_INTF3	Interrupt Force for proc1
0x150	PROC1_INTS0	Interrupt status after masking & forcing for proc1
0x154	PROC1_INTS1	Interrupt status after masking & forcing for proc1
0x158	PROC1_INTS2	Interrupt status after masking & forcing for proc1
0x15c	PROC1_INTS3	Interrupt status after masking & forcing for proc1
0x160	DORMANT_WAKE_INTE0	Interrupt Enable for dormant_wake

Offset	Name	Info
0x164	DORMANT_WAKE_INTE1	Interrupt Enable for dormant_wake
0x168	DORMANT_WAKE_INTE2	Interrupt Enable for dormant_wake
0x16c	DORMANT_WAKE_INTE3	Interrupt Enable for dormant_wake
0x170	DORMANT_WAKE_INTF0	Interrupt Force for dormant_wake
0x174	DORMANT_WAKE_INTF1	Interrupt Force for dormant_wake
0x178	DORMANT_WAKE_INTF2	Interrupt Force for dormant_wake
0x17c	DORMANT_WAKE_INTF3	Interrupt Force for dormant_wake
0x180	DORMANT_WAKE_INTS0	Interrupt status after masking & forcing for dormant_wake
0x184	DORMANT_WAKE_INTS1	Interrupt status after masking & forcing for dormant_wake
0x188	DORMANT_WAKE_INTS2	Interrupt status after masking & forcing for dormant_wake
0x18c	DORMANT_WAKE_INTS3	Interrupt status after masking & forcing for dormant_wake

IO_BANK0: GPIO0_STATUS, GPIO1_STATUS, ..., GPIO28_STATUS, GPIO29_STATUS Registers

Offsets: 0x000, 0x008, ..., 0x0e0, 0x0e8

Description

GPIO status

Table 284. GPIO0_STATUS, GPIO1_STATUS, ..., GPIO28_STATUS, GPIO29_STATUS Registers

Bits	Description	Type	Reset
31:27	Reserved.	-	-
26	**IRQTOPROC**: interrupt to processors, after override is applied	RO	0x0
25	Reserved.	-	-
24	**IRQFROMPAD**: interrupt from pad before override is applied	RO	0x0
23:20	Reserved.	-	-
19	**INTOPERI**: input signal to peripheral, after override is applied	RO	0x0
18	Reserved.	-	-
17	**INFROMPAD**: input signal from pad, before override is applied	RO	0x0
16:14	Reserved.	-	-
13	**OETOPAD**: output enable to pad after register override is applied	RO	0x0
12	**OEFROMPERI**: output enable from selected peripheral, before register override is applied	RO	0x0
11:10	Reserved.	-	-
9	**OUTTOPAD**: output signal to pad after register override is applied	RO	0x0
8	**OUTFROMPERI**: output signal from selected peripheral, before register override is applied	RO	0x0
7:0	Reserved.	-	-

IO_BANK0: GPIO0_CTRL, GPIO1_CTRL, ..., GPIO28_CTRL, GPIO29_CTRL

Registers

Offsets: 0x004, 0x00c, ..., 0x0e4, 0x0ec

Description

GPIO control including function select and overrides.

Table 285. GPIO0_CTRL, GPIO1_CTRL, ..., GPIO28_CTRL, GPIO29_CTRL Registers

Bits	Description	Type	Reset
31:30	Reserved.	-	-
29:28	**IRQOVER**	RW	0x0
	Enumerated values:		
	0x0 → NORMAL: don't invert the interrupt		
	0x1 → INVERT: invert the interrupt		
	0x2 → LOW: drive interrupt low		
	0x3 → HIGH: drive interrupt high		
27:18	Reserved.	-	-
17:16	**INOVER**	RW	0x0
	Enumerated values:		
	0x0 → NORMAL: don't invert the peri input		
	0x1 → INVERT: invert the peri input		
	0x2 → LOW: drive peri input low		
	0x3 → HIGH: drive peri input high		
15:14	Reserved.	-	-
13:12	**OEOVER**	RW	0x0
	Enumerated values:		
	0x0 → NORMAL: drive output enable from peripheral signal selected by funcsel		
	0x1 → INVERT: drive output enable from inverse of peripheral signal selected by funcsel		
	0x2 → DISABLE: disable output		
	0x3 → ENABLE: enable output		
11:10	Reserved.	-	-
9:8	**OUTOVER**	RW	0x0
	Enumerated values:		
	0x0 → NORMAL: drive output from peripheral signal selected by funcsel		
	0x1 → INVERT: drive output from inverse of peripheral signal selected by funcsel		
	0x2 → LOW: drive output low		
	0x3 → HIGH: drive output high		
7:5	Reserved.	-	-

Bits	Description	Type	Reset
4:0	**FUNCSEL**: Function select. 31 == NULL. See GPIO function table for available functions.	RW	0x1f

IO_BANK0: INTR0 Register

Offset: 0x0f0

Description

Raw Interrupts

Table 286. INTR0 Register

Bits	Description	Type	Reset
31	**GPIO7_EDGE_HIGH**	WC	0x0
30	**GPIO7_EDGE_LOW**	WC	0x0
29	**GPIO7_LEVEL_HIGH**	RO	0x0
28	**GPIO7_LEVEL_LOW**	RO	0x0
27	**GPIO6_EDGE_HIGH**	WC	0x0
26	**GPIO6_EDGE_LOW**	WC	0x0
25	**GPIO6_LEVEL_HIGH**	RO	0x0
24	**GPIO6_LEVEL_LOW**	RO	0x0
23	**GPIO5_EDGE_HIGH**	WC	0x0
22	**GPIO5_EDGE_LOW**	WC	0x0
21	**GPIO5_LEVEL_HIGH**	RO	0x0
20	**GPIO5_LEVEL_LOW**	RO	0x0
19	**GPIO4_EDGE_HIGH**	WC	0x0
18	**GPIO4_EDGE_LOW**	WC	0x0
17	**GPIO4_LEVEL_HIGH**	RO	0x0
16	**GPIO4_LEVEL_LOW**	RO	0x0
15	**GPIO3_EDGE_HIGH**	WC	0x0
14	**GPIO3_EDGE_LOW**	WC	0x0
13	**GPIO3_LEVEL_HIGH**	RO	0x0
12	**GPIO3_LEVEL_LOW**	RO	0x0
11	**GPIO2_EDGE_HIGH**	WC	0x0
10	**GPIO2_EDGE_LOW**	WC	0x0
9	**GPIO2_LEVEL_HIGH**	RO	0x0
8	**GPIO2_LEVEL_LOW**	RO	0x0
7	**GPIO1_EDGE_HIGH**	WC	0x0
6	**GPIO1_EDGE_LOW**	WC	0x0
5	**GPIO1_LEVEL_HIGH**	RO	0x0
4	**GPIO1_LEVEL_LOW**	RO	0x0
3	**GPIO0_EDGE_HIGH**	WC	0x0

Bits	Description	Type	Reset
2	**GPIO0_EDGE_LOW**	WC	0x0
1	**GPIO0_LEVEL_HIGH**	RO	0x0
0	**GPIO0_LEVEL_LOW**	RO	0x0

IO_BANK0: INTR1 Register

Offset: 0x0f4

Description

Raw Interrupts

Table 287. INTR1 Register

Bits	Description	Type	Reset
31	**GPIO15_EDGE_HIGH**	WC	0x0
30	**GPIO15_EDGE_LOW**	WC	0x0
29	**GPIO15_LEVEL_HIGH**	RO	0x0
28	**GPIO15_LEVEL_LOW**	RO	0x0
27	**GPIO14_EDGE_HIGH**	WC	0x0
26	**GPIO14_EDGE_LOW**	WC	0x0
25	**GPIO14_LEVEL_HIGH**	RO	0x0
24	**GPIO14_LEVEL_LOW**	RO	0x0
23	**GPIO13_EDGE_HIGH**	WC	0x0
22	**GPIO13_EDGE_LOW**	WC	0x0
21	**GPIO13_LEVEL_HIGH**	RO	0x0
20	**GPIO13_LEVEL_LOW**	RO	0x0
19	**GPIO12_EDGE_HIGH**	WC	0x0
18	**GPIO12_EDGE_LOW**	WC	0x0
17	**GPIO12_LEVEL_HIGH**	RO	0x0
16	**GPIO12_LEVEL_LOW**	RO	0x0
15	**GPIO11_EDGE_HIGH**	WC	0x0
14	**GPIO11_EDGE_LOW**	WC	0x0
13	**GPIO11_LEVEL_HIGH**	RO	0x0
12	**GPIO11_LEVEL_LOW**	RO	0x0
11	**GPIO10_EDGE_HIGH**	WC	0x0
10	**GPIO10_EDGE_LOW**	WC	0x0
9	**GPIO10_LEVEL_HIGH**	RO	0x0
8	**GPIO10_LEVEL_LOW**	RO	0x0
7	**GPIO9_EDGE_HIGH**	WC	0x0
6	**GPIO9_EDGE_LOW**	WC	0x0
5	**GPIO9_LEVEL_HIGH**	RO	0x0

Bits	Description	Type	Reset
4	**GPIO9_LEVEL_LOW**	RO	0x0
3	**GPIO8_EDGE_HIGH**	WC	0x0
2	**GPIO8_EDGE_LOW**	WC	0x0
1	**GPIO8_LEVEL_HIGH**	RO	0x0
0	**GPIO8_LEVEL_LOW**	RO	0x0

IO_BANK0: INTR2 Register

Offset: 0x0f8

Description

Raw Interrupts

Table 288. INTR2 Register

Bits	Description	Type	Reset
31	**GPIO23_EDGE_HIGH**	WC	0x0
30	**GPIO23_EDGE_LOW**	WC	0x0
29	**GPIO23_LEVEL_HIGH**	RO	0x0
28	**GPIO23_LEVEL_LOW**	RO	0x0
27	**GPIO22_EDGE_HIGH**	WC	0x0
26	**GPIO22_EDGE_LOW**	WC	0x0
25	**GPIO22_LEVEL_HIGH**	RO	0x0
24	**GPIO22_LEVEL_LOW**	RO	0x0
23	**GPIO21_EDGE_HIGH**	WC	0x0
22	**GPIO21_EDGE_LOW**	WC	0x0
21	**GPIO21_LEVEL_HIGH**	RO	0x0
20	**GPIO21_LEVEL_LOW**	RO	0x0
19	**GPIO20_EDGE_HIGH**	WC	0x0
18	**GPIO20_EDGE_LOW**	WC	0x0
17	**GPIO20_LEVEL_HIGH**	RO	0x0
16	**GPIO20_LEVEL_LOW**	RO	0x0
15	**GPIO19_EDGE_HIGH**	WC	0x0
14	**GPIO19_EDGE_LOW**	WC	0x0
13	**GPIO19_LEVEL_HIGH**	RO	0x0
12	**GPIO19_LEVEL_LOW**	RO	0x0
11	**GPIO18_EDGE_HIGH**	WC	0x0
10	**GPIO18_EDGE_LOW**	WC	0x0
9	**GPIO18_LEVEL_HIGH**	RO	0x0
8	**GPIO18_LEVEL_LOW**	RO	0x0
7	**GPIO17_EDGE_HIGH**	WC	0x0

Bits	Description	Type	Reset
6	**GPIO17_EDGE_LOW**	WC	0x0
5	**GPIO17_LEVEL_HIGH**	RO	0x0
4	**GPIO17_LEVEL_LOW**	RO	0x0
3	**GPIO16_EDGE_HIGH**	WC	0x0
2	**GPIO16_EDGE_LOW**	WC	0x0
1	**GPIO16_LEVEL_HIGH**	RO	0x0
0	**GPIO16_LEVEL_LOW**	RO	0x0

IO_BANK0: INTR3 Register

Offset: 0x0fc

Description

Raw Interrupts

Table 289. INTR3 Register

Bits	Description	Type	Reset
31:24	Reserved.	-	-
23	**GPIO29_EDGE_HIGH**	WC	0x0
22	**GPIO29_EDGE_LOW**	WC	0x0
21	**GPIO29_LEVEL_HIGH**	RO	0x0
20	**GPIO29_LEVEL_LOW**	RO	0x0
19	**GPIO28_EDGE_HIGH**	WC	0x0
18	**GPIO28_EDGE_LOW**	WC	0x0
17	**GPIO28_LEVEL_HIGH**	RO	0x0
16	**GPIO28_LEVEL_LOW**	RO	0x0
15	**GPIO27_EDGE_HIGH**	WC	0x0
14	**GPIO27_EDGE_LOW**	WC	0x0
13	**GPIO27_LEVEL_HIGH**	RO	0x0
12	**GPIO27_LEVEL_LOW**	RO	0x0
11	**GPIO26_EDGE_HIGH**	WC	0x0
10	**GPIO26_EDGE_LOW**	WC	0x0
9	**GPIO26_LEVEL_HIGH**	RO	0x0
8	**GPIO26_LEVEL_LOW**	RO	0x0
7	**GPIO25_EDGE_HIGH**	WC	0x0
6	**GPIO25_EDGE_LOW**	WC	0x0
5	**GPIO25_LEVEL_HIGH**	RO	0x0
4	**GPIO25_LEVEL_LOW**	RO	0x0
3	**GPIO24_EDGE_HIGH**	WC	0x0
2	**GPIO24_EDGE_LOW**	WC	0x0

Bits	Description	Type	Reset
1	**GPIO24_LEVEL_HIGH**	RO	0x0
0	**GPIO24_LEVEL_LOW**	RO	0x0

IO_BANK0: PROC0_INTE0 Register

Offset: 0x100

Description

Interrupt Enable for proc0

Table 290. PROC0_INTE0 Register

Bits	Description	Type	Reset
31	**GPIO7_EDGE_HIGH**	RW	0x0
30	**GPIO7_EDGE_LOW**	RW	0x0
29	**GPIO7_LEVEL_HIGH**	RW	0x0
28	**GPIO7_LEVEL_LOW**	RW	0x0
27	**GPIO6_EDGE_HIGH**	RW	0x0
26	**GPIO6_EDGE_LOW**	RW	0x0
25	**GPIO6_LEVEL_HIGH**	RW	0x0
24	**GPIO6_LEVEL_LOW**	RW	0x0
23	**GPIO5_EDGE_HIGH**	RW	0x0
22	**GPIO5_EDGE_LOW**	RW	0x0
21	**GPIO5_LEVEL_HIGH**	RW	0x0
20	**GPIO5_LEVEL_LOW**	RW	0x0
19	**GPIO4_EDGE_HIGH**	RW	0x0
18	**GPIO4_EDGE_LOW**	RW	0x0
17	**GPIO4_LEVEL_HIGH**	RW	0x0
16	**GPIO4_LEVEL_LOW**	RW	0x0
15	**GPIO3_EDGE_HIGH**	RW	0x0
14	**GPIO3_EDGE_LOW**	RW	0x0
13	**GPIO3_LEVEL_HIGH**	RW	0x0
12	**GPIO3_LEVEL_LOW**	RW	0x0
11	**GPIO2_EDGE_HIGH**	RW	0x0
10	**GPIO2_EDGE_LOW**	RW	0x0
9	**GPIO2_LEVEL_HIGH**	RW	0x0
8	**GPIO2_LEVEL_LOW**	RW	0x0
7	**GPIO1_EDGE_HIGH**	RW	0x0
6	**GPIO1_EDGE_LOW**	RW	0x0
5	**GPIO1_LEVEL_HIGH**	RW	0x0
4	**GPIO1_LEVEL_LOW**	RW	0x0

Bits	Description	Type	Reset
3	**GPIO0_EDGE_HIGH**	RW	0x0
2	**GPIO0_EDGE_LOW**	RW	0x0
1	**GPIO0_LEVEL_HIGH**	RW	0x0
0	**GPIO0_LEVEL_LOW**	RW	0x0

IO_BANK0: PROC0_INTE1 Register

Offset: 0x104

Description

Interrupt Enable for proc0

Table 291. PROC0_INTE1 Register

Bits	Description	Type	Reset
31	**GPIO15_EDGE_HIGH**	RW	0x0
30	**GPIO15_EDGE_LOW**	RW	0x0
29	**GPIO15_LEVEL_HIGH**	RW	0x0
28	**GPIO15_LEVEL_LOW**	RW	0x0
27	**GPIO14_EDGE_HIGH**	RW	0x0
26	**GPIO14_EDGE_LOW**	RW	0x0
25	**GPIO14_LEVEL_HIGH**	RW	0x0
24	**GPIO14_LEVEL_LOW**	RW	0x0
23	**GPIO13_EDGE_HIGH**	RW	0x0
22	**GPIO13_EDGE_LOW**	RW	0x0
21	**GPIO13_LEVEL_HIGH**	RW	0x0
20	**GPIO13_LEVEL_LOW**	RW	0x0
19	**GPIO12_EDGE_HIGH**	RW	0x0
18	**GPIO12_EDGE_LOW**	RW	0x0
17	**GPIO12_LEVEL_HIGH**	RW	0x0
16	**GPIO12_LEVEL_LOW**	RW	0x0
15	**GPIO11_EDGE_HIGH**	RW	0x0
14	**GPIO11_EDGE_LOW**	RW	0x0
13	**GPIO11_LEVEL_HIGH**	RW	0x0
12	**GPIO11_LEVEL_LOW**	RW	0x0
11	**GPIO10_EDGE_HIGH**	RW	0x0
10	**GPIO10_EDGE_LOW**	RW	0x0
9	**GPIO10_LEVEL_HIGH**	RW	0x0
8	**GPIO10_LEVEL_LOW**	RW	0x0
7	**GPIO9_EDGE_HIGH**	RW	0x0
6	**GPIO9_EDGE_LOW**	RW	0x0

Bits	Description	Type	Reset
5	**GPIO9_LEVEL_HIGH**	RW	0x0
4	**GPIO9_LEVEL_LOW**	RW	0x0
3	**GPIO8_EDGE_HIGH**	RW	0x0
2	**GPIO8_EDGE_LOW**	RW	0x0
1	**GPIO8_LEVEL_HIGH**	RW	0x0
0	**GPIO8_LEVEL_LOW**	RW	0x0

IO_BANK0: PROC0_INTE2 Register

Offset: 0x108

Description

Interrupt Enable for proc0

Table 292. PROC0_INTE2 Register

Bits	Description	Type	Reset
31	**GPIO23_EDGE_HIGH**	RW	0x0
30	**GPIO23_EDGE_LOW**	RW	0x0
29	**GPIO23_LEVEL_HIGH**	RW	0x0
28	**GPIO23_LEVEL_LOW**	RW	0x0
27	**GPIO22_EDGE_HIGH**	RW	0x0
26	**GPIO22_EDGE_LOW**	RW	0x0
25	**GPIO22_LEVEL_HIGH**	RW	0x0
24	**GPIO22_LEVEL_LOW**	RW	0x0
23	**GPIO21_EDGE_HIGH**	RW	0x0
22	**GPIO21_EDGE_LOW**	RW	0x0
21	**GPIO21_LEVEL_HIGH**	RW	0x0
20	**GPIO21_LEVEL_LOW**	RW	0x0
19	**GPIO20_EDGE_HIGH**	RW	0x0
18	**GPIO20_EDGE_LOW**	RW	0x0
17	**GPIO20_LEVEL_HIGH**	RW	0x0
16	**GPIO20_LEVEL_LOW**	RW	0x0
15	**GPIO19_EDGE_HIGH**	RW	0x0
14	**GPIO19_EDGE_LOW**	RW	0x0
13	**GPIO19_LEVEL_HIGH**	RW	0x0
12	**GPIO19_LEVEL_LOW**	RW	0x0
11	**GPIO18_EDGE_HIGH**	RW	0x0
10	**GPIO18_EDGE_LOW**	RW	0x0
9	**GPIO18_LEVEL_HIGH**	RW	0x0
8	**GPIO18_LEVEL_LOW**	RW	0x0

Bits	Description	Type	Reset
7	**GPIO17_EDGE_HIGH**	RW	0x0
6	**GPIO17_EDGE_LOW**	RW	0x0
5	**GPIO17_LEVEL_HIGH**	RW	0x0
4	**GPIO17_LEVEL_LOW**	RW	0x0
3	**GPIO16_EDGE_HIGH**	RW	0x0
2	**GPIO16_EDGE_LOW**	RW	0x0
1	**GPIO16_LEVEL_HIGH**	RW	0x0
0	**GPIO16_LEVEL_LOW**	RW	0x0

IO_BANK0: PROC0_INTE3 Register

Offset: 0x10c

Description

Interrupt Enable for proc0

Table 293. PROC0_INTE3 Register

Bits	Description	Type	Reset
31:24	Reserved.	-	-
23	**GPIO29_EDGE_HIGH**	RW	0x0
22	**GPIO29_EDGE_LOW**	RW	0x0
21	**GPIO29_LEVEL_HIGH**	RW	0x0
20	**GPIO29_LEVEL_LOW**	RW	0x0
19	**GPIO28_EDGE_HIGH**	RW	0x0
18	**GPIO28_EDGE_LOW**	RW	0x0
17	**GPIO28_LEVEL_HIGH**	RW	0x0
16	**GPIO28_LEVEL_LOW**	RW	0x0
15	**GPIO27_EDGE_HIGH**	RW	0x0
14	**GPIO27_EDGE_LOW**	RW	0x0
13	**GPIO27_LEVEL_HIGH**	RW	0x0
12	**GPIO27_LEVEL_LOW**	RW	0x0
11	**GPIO26_EDGE_HIGH**	RW	0x0
10	**GPIO26_EDGE_LOW**	RW	0x0
9	**GPIO26_LEVEL_HIGH**	RW	0x0
8	**GPIO26_LEVEL_LOW**	RW	0x0
7	**GPIO25_EDGE_HIGH**	RW	0x0
6	**GPIO25_EDGE_LOW**	RW	0x0
5	**GPIO25_LEVEL_HIGH**	RW	0x0
4	**GPIO25_LEVEL_LOW**	RW	0x0
3	**GPIO24_EDGE_HIGH**	RW	0x0

Bits	Description	Type	Reset
2	**GPIO24_EDGE_LOW**	RW	0x0
1	**GPIO24_LEVEL_HIGH**	RW	0x0
0	**GPIO24_LEVEL_LOW**	RW	0x0

IO_BANK0: PROC0_INTF0 Register

Offset: 0x110

Description

Interrupt Force for proc0

Table 294. PROC0_INTF0 Register

Bits	Description	Type	Reset
31	**GPIO7_EDGE_HIGH**	RW	0x0
30	**GPIO7_EDGE_LOW**	RW	0x0
29	**GPIO7_LEVEL_HIGH**	RW	0x0
28	**GPIO7_LEVEL_LOW**	RW	0x0
27	**GPIO6_EDGE_HIGH**	RW	0x0
26	**GPIO6_EDGE_LOW**	RW	0x0
25	**GPIO6_LEVEL_HIGH**	RW	0x0
24	**GPIO6_LEVEL_LOW**	RW	0x0
23	**GPIO5_EDGE_HIGH**	RW	0x0
22	**GPIO5_EDGE_LOW**	RW	0x0
21	**GPIO5_LEVEL_HIGH**	RW	0x0
20	**GPIO5_LEVEL_LOW**	RW	0x0
19	**GPIO4_EDGE_HIGH**	RW	0x0
18	**GPIO4_EDGE_LOW**	RW	0x0
17	**GPIO4_LEVEL_HIGH**	RW	0x0
16	**GPIO4_LEVEL_LOW**	RW	0x0
15	**GPIO3_EDGE_HIGH**	RW	0x0
14	**GPIO3_EDGE_LOW**	RW	0x0
13	**GPIO3_LEVEL_HIGH**	RW	0x0
12	**GPIO3_LEVEL_LOW**	RW	0x0
11	**GPIO2_EDGE_HIGH**	RW	0x0
10	**GPIO2_EDGE_LOW**	RW	0x0
9	**GPIO2_LEVEL_HIGH**	RW	0x0
8	**GPIO2_LEVEL_LOW**	RW	0x0
7	**GPIO1_EDGE_HIGH**	RW	0x0
6	**GPIO1_EDGE_LOW**	RW	0x0
5	**GPIO1_LEVEL_HIGH**	RW	0x0

Bits	Description	Type	Reset
4	**GPIO1_LEVEL_LOW**	RW	0x0
3	**GPIO0_EDGE_HIGH**	RW	0x0
2	**GPIO0_EDGE_LOW**	RW	0x0
1	**GPIO0_LEVEL_HIGH**	RW	0x0
0	**GPIO0_LEVEL_LOW**	RW	0x0

IO_BANK0: PROC0_INTF1 Register

Offset: 0x114

Description

Interrupt Force for proc0

Table 295. PROC0_INTF1 Register

Bits	Description	Type	Reset
31	**GPIO15_EDGE_HIGH**	RW	0x0
30	**GPIO15_EDGE_LOW**	RW	0x0
29	**GPIO15_LEVEL_HIGH**	RW	0x0
28	**GPIO15_LEVEL_LOW**	RW	0x0
27	**GPIO14_EDGE_HIGH**	RW	0x0
26	**GPIO14_EDGE_LOW**	RW	0x0
25	**GPIO14_LEVEL_HIGH**	RW	0x0
24	**GPIO14_LEVEL_LOW**	RW	0x0
23	**GPIO13_EDGE_HIGH**	RW	0x0
22	**GPIO13_EDGE_LOW**	RW	0x0
21	**GPIO13_LEVEL_HIGH**	RW	0x0
20	**GPIO13_LEVEL_LOW**	RW	0x0
19	**GPIO12_EDGE_HIGH**	RW	0x0
18	**GPIO12_EDGE_LOW**	RW	0x0
17	**GPIO12_LEVEL_HIGH**	RW	0x0
16	**GPIO12_LEVEL_LOW**	RW	0x0
15	**GPIO11_EDGE_HIGH**	RW	0x0
14	**GPIO11_EDGE_LOW**	RW	0x0
13	**GPIO11_LEVEL_HIGH**	RW	0x0
12	**GPIO11_LEVEL_LOW**	RW	0x0
11	**GPIO10_EDGE_HIGH**	RW	0x0
10	**GPIO10_EDGE_LOW**	RW	0x0
9	**GPIO10_LEVEL_HIGH**	RW	0x0
8	**GPIO10_LEVEL_LOW**	RW	0x0
7	**GPIO9_EDGE_HIGH**	RW	0x0

Bits	Description	Type	Reset
6	**GPIO9_EDGE_LOW**	RW	0x0
5	**GPIO9_LEVEL_HIGH**	RW	0x0
4	**GPIO9_LEVEL_LOW**	RW	0x0
3	**GPIO8_EDGE_HIGH**	RW	0x0
2	**GPIO8_EDGE_LOW**	RW	0x0
1	**GPIO8_LEVEL_HIGH**	RW	0x0
0	**GPIO8_LEVEL_LOW**	RW	0x0

IO_BANK0: PROC0_INTF2 Register

Offset: 0x118

Description

Interrupt Force for proc0

Table 296. PROC0_INTF2 Register

Bits	Description	Type	Reset
31	**GPIO23_EDGE_HIGH**	RW	0x0
30	**GPIO23_EDGE_LOW**	RW	0x0
29	**GPIO23_LEVEL_HIGH**	RW	0x0
28	**GPIO23_LEVEL_LOW**	RW	0x0
27	**GPIO22_EDGE_HIGH**	RW	0x0
26	**GPIO22_EDGE_LOW**	RW	0x0
25	**GPIO22_LEVEL_HIGH**	RW	0x0
24	**GPIO22_LEVEL_LOW**	RW	0x0
23	**GPIO21_EDGE_HIGH**	RW	0x0
22	**GPIO21_EDGE_LOW**	RW	0x0
21	**GPIO21_LEVEL_HIGH**	RW	0x0
20	**GPIO21_LEVEL_LOW**	RW	0x0
19	**GPIO20_EDGE_HIGH**	RW	0x0
18	**GPIO20_EDGE_LOW**	RW	0x0
17	**GPIO20_LEVEL_HIGH**	RW	0x0
16	**GPIO20_LEVEL_LOW**	RW	0x0
15	**GPIO19_EDGE_HIGH**	RW	0x0
14	**GPIO19_EDGE_LOW**	RW	0x0
13	**GPIO19_LEVEL_HIGH**	RW	0x0
12	**GPIO19_LEVEL_LOW**	RW	0x0
11	**GPIO18_EDGE_HIGH**	RW	0x0
10	**GPIO18_EDGE_LOW**	RW	0x0
9	**GPIO18_LEVEL_HIGH**	RW	0x0

Bits	Description	Type	Reset
8	**GPIO18_LEVEL_LOW**	RW	0x0
7	**GPIO17_EDGE_HIGH**	RW	0x0
6	**GPIO17_EDGE_LOW**	RW	0x0
5	**GPIO17_LEVEL_HIGH**	RW	0x0
4	**GPIO17_LEVEL_LOW**	RW	0x0
3	**GPIO16_EDGE_HIGH**	RW	0x0
2	**GPIO16_EDGE_LOW**	RW	0x0
1	**GPIO16_LEVEL_HIGH**	RW	0x0
0	**GPIO16_LEVEL_LOW**	RW	0x0

IO_BANK0: PROC0_INTF3 Register

Offset: 0x11c

Description

Interrupt Force for proc0

Table 297. PROC0_INTF3 Register

Bits	Description	Type	Reset
31:24	Reserved.	-	-
23	**GPIO29_EDGE_HIGH**	RW	0x0
22	**GPIO29_EDGE_LOW**	RW	0x0
21	**GPIO29_LEVEL_HIGH**	RW	0x0
20	**GPIO29_LEVEL_LOW**	RW	0x0
19	**GPIO28_EDGE_HIGH**	RW	0x0
18	**GPIO28_EDGE_LOW**	RW	0x0
17	**GPIO28_LEVEL_HIGH**	RW	0x0
16	**GPIO28_LEVEL_LOW**	RW	0x0
15	**GPIO27_EDGE_HIGH**	RW	0x0
14	**GPIO27_EDGE_LOW**	RW	0x0
13	**GPIO27_LEVEL_HIGH**	RW	0x0
12	**GPIO27_LEVEL_LOW**	RW	0x0
11	**GPIO26_EDGE_HIGH**	RW	0x0
10	**GPIO26_EDGE_LOW**	RW	0x0
9	**GPIO26_LEVEL_HIGH**	RW	0x0
8	**GPIO26_LEVEL_LOW**	RW	0x0
7	**GPIO25_EDGE_HIGH**	RW	0x0
6	**GPIO25_EDGE_LOW**	RW	0x0
5	**GPIO25_LEVEL_HIGH**	RW	0x0
4	**GPIO25_LEVEL_LOW**	RW	0x0

Bits	Description	Type	Reset
3	**GPIO24_EDGE_HIGH**	RW	0x0
2	**GPIO24_EDGE_LOW**	RW	0x0
1	**GPIO24_LEVEL_HIGH**	RW	0x0
0	**GPIO24_LEVEL_LOW**	RW	0x0

IO_BANK0: PROC0_INTS0 Register

Offset: 0x120

Description

Interrupt status after masking & forcing for proc0

Table 298. PROC0_INTS0 Register

Bits	Description	Type	Reset
31	**GPIO7_EDGE_HIGH**	RO	0x0
30	**GPIO7_EDGE_LOW**	RO	0x0
29	**GPIO7_LEVEL_HIGH**	RO	0x0
28	**GPIO7_LEVEL_LOW**	RO	0x0
27	**GPIO6_EDGE_HIGH**	RO	0x0
26	**GPIO6_EDGE_LOW**	RO	0x0
25	**GPIO6_LEVEL_HIGH**	RO	0x0
24	**GPIO6_LEVEL_LOW**	RO	0x0
23	**GPIO5_EDGE_HIGH**	RO	0x0
22	**GPIO5_EDGE_LOW**	RO	0x0
21	**GPIO5_LEVEL_HIGH**	RO	0x0
20	**GPIO5_LEVEL_LOW**	RO	0x0
19	**GPIO4_EDGE_HIGH**	RO	0x0
18	**GPIO4_EDGE_LOW**	RO	0x0
17	**GPIO4_LEVEL_HIGH**	RO	0x0
16	**GPIO4_LEVEL_LOW**	RO	0x0
15	**GPIO3_EDGE_HIGH**	RO	0x0
14	**GPIO3_EDGE_LOW**	RO	0x0
13	**GPIO3_LEVEL_HIGH**	RO	0x0
12	**GPIO3_LEVEL_LOW**	RO	0x0
11	**GPIO2_EDGE_HIGH**	RO	0x0
10	**GPIO2_EDGE_LOW**	RO	0x0
9	**GPIO2_LEVEL_HIGH**	RO	0x0
8	**GPIO2_LEVEL_LOW**	RO	0x0
7	**GPIO1_EDGE_HIGH**	RO	0x0
6	**GPIO1_EDGE_LOW**	RO	0x0

Bits	Description	Type	Reset
5	**GPIO1_LEVEL_HIGH**	RO	0x0
4	**GPIO1_LEVEL_LOW**	RO	0x0
3	**GPIO0_EDGE_HIGH**	RO	0x0
2	**GPIO0_EDGE_LOW**	RO	0x0
1	**GPIO0_LEVEL_HIGH**	RO	0x0
0	**GPIO0_LEVEL_LOW**	RO	0x0

IO_BANK0: PROC0_INTS1 Register

Offset: 0x124

Description

Interrupt status after masking & forcing for proc0

Table 299. PROC0_INTS1 Register

Bits	Description	Type	Reset
31	**GPIO15_EDGE_HIGH**	RO	0x0
30	**GPIO15_EDGE_LOW**	RO	0x0
29	**GPIO15_LEVEL_HIGH**	RO	0x0
28	**GPIO15_LEVEL_LOW**	RO	0x0
27	**GPIO14_EDGE_HIGH**	RO	0x0
26	**GPIO14_EDGE_LOW**	RO	0x0
25	**GPIO14_LEVEL_HIGH**	RO	0x0
24	**GPIO14_LEVEL_LOW**	RO	0x0
23	**GPIO13_EDGE_HIGH**	RO	0x0
22	**GPIO13_EDGE_LOW**	RO	0x0
21	**GPIO13_LEVEL_HIGH**	RO	0x0
20	**GPIO13_LEVEL_LOW**	RO	0x0
19	**GPIO12_EDGE_HIGH**	RO	0x0
18	**GPIO12_EDGE_LOW**	RO	0x0
17	**GPIO12_LEVEL_HIGH**	RO	0x0
16	**GPIO12_LEVEL_LOW**	RO	0x0
15	**GPIO11_EDGE_HIGH**	RO	0x0
14	**GPIO11_EDGE_LOW**	RO	0x0
13	**GPIO11_LEVEL_HIGH**	RO	0x0
12	**GPIO11_LEVEL_LOW**	RO	0x0
11	**GPIO10_EDGE_HIGH**	RO	0x0
10	**GPIO10_EDGE_LOW**	RO	0x0
9	**GPIO10_LEVEL_HIGH**	RO	0x0
8	**GPIO10_LEVEL_LOW**	RO	0x0

Bits	Description	Type	Reset
7	**GPIO9_EDGE_HIGH**	RO	0x0
6	**GPIO9_EDGE_LOW**	RO	0x0
5	**GPIO9_LEVEL_HIGH**	RO	0x0
4	**GPIO9_LEVEL_LOW**	RO	0x0
3	**GPIO8_EDGE_HIGH**	RO	0x0
2	**GPIO8_EDGE_LOW**	RO	0x0
1	**GPIO8_LEVEL_HIGH**	RO	0x0
0	**GPIO8_LEVEL_LOW**	RO	0x0

IO_BANK0: PROC0_INTS2 Register

Offset: 0x128

Description

Interrupt status after masking & forcing for proc0

Table 300. PROC0_INTS2 Register

Bits	Description	Type	Reset
31	**GPIO23_EDGE_HIGH**	RO	0x0
30	**GPIO23_EDGE_LOW**	RO	0x0
29	**GPIO23_LEVEL_HIGH**	RO	0x0
28	**GPIO23_LEVEL_LOW**	RO	0x0
27	**GPIO22_EDGE_HIGH**	RO	0x0
26	**GPIO22_EDGE_LOW**	RO	0x0
25	**GPIO22_LEVEL_HIGH**	RO	0x0
24	**GPIO22_LEVEL_LOW**	RO	0x0
23	**GPIO21_EDGE_HIGH**	RO	0x0
22	**GPIO21_EDGE_LOW**	RO	0x0
21	**GPIO21_LEVEL_HIGH**	RO	0x0
20	**GPIO21_LEVEL_LOW**	RO	0x0
19	**GPIO20_EDGE_HIGH**	RO	0x0
18	**GPIO20_EDGE_LOW**	RO	0x0
17	**GPIO20_LEVEL_HIGH**	RO	0x0
16	**GPIO20_LEVEL_LOW**	RO	0x0
15	**GPIO19_EDGE_HIGH**	RO	0x0
14	**GPIO19_EDGE_LOW**	RO	0x0
13	**GPIO19_LEVEL_HIGH**	RO	0x0
12	**GPIO19_LEVEL_LOW**	RO	0x0
11	**GPIO18_EDGE_HIGH**	RO	0x0
10	**GPIO18_EDGE_LOW**	RO	0x0

Bits	Description	Type	Reset
9	**GPIO18_LEVEL_HIGH**	RO	0x0
8	**GPIO18_LEVEL_LOW**	RO	0x0
7	**GPIO17_EDGE_HIGH**	RO	0x0
6	**GPIO17_EDGE_LOW**	RO	0x0
5	**GPIO17_LEVEL_HIGH**	RO	0x0
4	**GPIO17_LEVEL_LOW**	RO	0x0
3	**GPIO16_EDGE_HIGH**	RO	0x0
2	**GPIO16_EDGE_LOW**	RO	0x0
1	**GPIO16_LEVEL_HIGH**	RO	0x0
0	**GPIO16_LEVEL_LOW**	RO	0x0

IO_BANK0: PROC0_INTS3 Register

Offset: 0x12c

Description

Interrupt status after masking & forcing for proc0

Table 301. PROC0_INTS3 Register

Bits	Description	Type	Reset
31:24	Reserved.	-	-
23	**GPIO29_EDGE_HIGH**	RO	0x0
22	**GPIO29_EDGE_LOW**	RO	0x0
21	**GPIO29_LEVEL_HIGH**	RO	0x0
20	**GPIO29_LEVEL_LOW**	RO	0x0
19	**GPIO28_EDGE_HIGH**	RO	0x0
18	**GPIO28_EDGE_LOW**	RO	0x0
17	**GPIO28_LEVEL_HIGH**	RO	0x0
16	**GPIO28_LEVEL_LOW**	RO	0x0
15	**GPIO27_EDGE_HIGH**	RO	0x0
14	**GPIO27_EDGE_LOW**	RO	0x0
13	**GPIO27_LEVEL_HIGH**	RO	0x0
12	**GPIO27_LEVEL_LOW**	RO	0x0
11	**GPIO26_EDGE_HIGH**	RO	0x0
10	**GPIO26_EDGE_LOW**	RO	0x0
9	**GPIO26_LEVEL_HIGH**	RO	0x0
8	**GPIO26_LEVEL_LOW**	RO	0x0
7	**GPIO25_EDGE_HIGH**	RO	0x0
6	**GPIO25_EDGE_LOW**	RO	0x0
5	**GPIO25_LEVEL_HIGH**	RO	0x0

Bits	Description	Type	Reset
4	**GPIO25_LEVEL_LOW**	RO	0x0
3	**GPIO24_EDGE_HIGH**	RO	0x0
2	**GPIO24_EDGE_LOW**	RO	0x0
1	**GPIO24_LEVEL_HIGH**	RO	0x0
0	**GPIO24_LEVEL_LOW**	RO	0x0

IO_BANK0: PROC1_INTE0 Register

Offset: 0x130

Description

Interrupt Enable for proc1

Table 302. PROC1_INTE0 Register

Bits	Description	Type	Reset
31	**GPIO7_EDGE_HIGH**	RW	0x0
30	**GPIO7_EDGE_LOW**	RW	0x0
29	**GPIO7_LEVEL_HIGH**	RW	0x0
28	**GPIO7_LEVEL_LOW**	RW	0x0
27	**GPIO6_EDGE_HIGH**	RW	0x0
26	**GPIO6_EDGE_LOW**	RW	0x0
25	**GPIO6_LEVEL_HIGH**	RW	0x0
24	**GPIO6_LEVEL_LOW**	RW	0x0
23	**GPIO5_EDGE_HIGH**	RW	0x0
22	**GPIO5_EDGE_LOW**	RW	0x0
21	**GPIO5_LEVEL_HIGH**	RW	0x0
20	**GPIO5_LEVEL_LOW**	RW	0x0
19	**GPIO4_EDGE_HIGH**	RW	0x0
18	**GPIO4_EDGE_LOW**	RW	0x0
17	**GPIO4_LEVEL_HIGH**	RW	0x0
16	**GPIO4_LEVEL_LOW**	RW	0x0
15	**GPIO3_EDGE_HIGH**	RW	0x0
14	**GPIO3_EDGE_LOW**	RW	0x0
13	**GPIO3_LEVEL_HIGH**	RW	0x0
12	**GPIO3_LEVEL_LOW**	RW	0x0
11	**GPIO2_EDGE_HIGH**	RW	0x0
10	**GPIO2_EDGE_LOW**	RW	0x0
9	**GPIO2_LEVEL_HIGH**	RW	0x0
8	**GPIO2_LEVEL_LOW**	RW	0x0
7	**GPIO1_EDGE_HIGH**	RW	0x0

Bits	Description	Type	Reset
6	**GPIO1_EDGE_LOW**	RW	0x0
5	**GPIO1_LEVEL_HIGH**	RW	0x0
4	**GPIO1_LEVEL_LOW**	RW	0x0
3	**GPIO0_EDGE_HIGH**	RW	0x0
2	**GPIO0_EDGE_LOW**	RW	0x0
1	**GPIO0_LEVEL_HIGH**	RW	0x0
0	**GPIO0_LEVEL_LOW**	RW	0x0

IO_BANK0: PROC1_INTE1 Register

Offset: 0x134

Description

Interrupt Enable for proc1

Table 303. PROC1_INTE1 Register

Bits	Description	Type	Reset
31	**GPIO15_EDGE_HIGH**	RW	0x0
30	**GPIO15_EDGE_LOW**	RW	0x0
29	**GPIO15_LEVEL_HIGH**	RW	0x0
28	**GPIO15_LEVEL_LOW**	RW	0x0
27	**GPIO14_EDGE_HIGH**	RW	0x0
26	**GPIO14_EDGE_LOW**	RW	0x0
25	**GPIO14_LEVEL_HIGH**	RW	0x0
24	**GPIO14_LEVEL_LOW**	RW	0x0
23	**GPIO13_EDGE_HIGH**	RW	0x0
22	**GPIO13_EDGE_LOW**	RW	0x0
21	**GPIO13_LEVEL_HIGH**	RW	0x0
20	**GPIO13_LEVEL_LOW**	RW	0x0
19	**GPIO12_EDGE_HIGH**	RW	0x0
18	**GPIO12_EDGE_LOW**	RW	0x0
17	**GPIO12_LEVEL_HIGH**	RW	0x0
16	**GPIO12_LEVEL_LOW**	RW	0x0
15	**GPIO11_EDGE_HIGH**	RW	0x0
14	**GPIO11_EDGE_LOW**	RW	0x0
13	**GPIO11_LEVEL_HIGH**	RW	0x0
12	**GPIO11_LEVEL_LOW**	RW	0x0
11	**GPIO10_EDGE_HIGH**	RW	0x0
10	**GPIO10_EDGE_LOW**	RW	0x0
9	**GPIO10_LEVEL_HIGH**	RW	0x0

Bits	Description	Type	Reset
8	**GPIO10_LEVEL_LOW**	RW	0x0
7	**GPIO9_EDGE_HIGH**	RW	0x0
6	**GPIO9_EDGE_LOW**	RW	0x0
5	**GPIO9_LEVEL_HIGH**	RW	0x0
4	**GPIO9_LEVEL_LOW**	RW	0x0
3	**GPIO8_EDGE_HIGH**	RW	0x0
2	**GPIO8_EDGE_LOW**	RW	0x0
1	**GPIO8_LEVEL_HIGH**	RW	0x0
0	**GPIO8_LEVEL_LOW**	RW	0x0

IO_BANK0: PROC1_INTE2 Register

Offset: 0x138

Description

Interrupt Enable for proc1

Table 304. PROC1_INTE2 Register

Bits	Description	Type	Reset
31	**GPIO23_EDGE_HIGH**	RW	0x0
30	**GPIO23_EDGE_LOW**	RW	0x0
29	**GPIO23_LEVEL_HIGH**	RW	0x0
28	**GPIO23_LEVEL_LOW**	RW	0x0
27	**GPIO22_EDGE_HIGH**	RW	0x0
26	**GPIO22_EDGE_LOW**	RW	0x0
25	**GPIO22_LEVEL_HIGH**	RW	0x0
24	**GPIO22_LEVEL_LOW**	RW	0x0
23	**GPIO21_EDGE_HIGH**	RW	0x0
22	**GPIO21_EDGE_LOW**	RW	0x0
21	**GPIO21_LEVEL_HIGH**	RW	0x0
20	**GPIO21_LEVEL_LOW**	RW	0x0
19	**GPIO20_EDGE_HIGH**	RW	0x0
18	**GPIO20_EDGE_LOW**	RW	0x0
17	**GPIO20_LEVEL_HIGH**	RW	0x0
16	**GPIO20_LEVEL_LOW**	RW	0x0
15	**GPIO19_EDGE_HIGH**	RW	0x0
14	**GPIO19_EDGE_LOW**	RW	0x0
13	**GPIO19_LEVEL_HIGH**	RW	0x0
12	**GPIO19_LEVEL_LOW**	RW	0x0
11	**GPIO18_EDGE_HIGH**	RW	0x0

Bits	Description	Type	Reset
10	**GPIO18_EDGE_LOW**	RW	0x0
9	**GPIO18_LEVEL_HIGH**	RW	0x0
8	**GPIO18_LEVEL_LOW**	RW	0x0
7	**GPIO17_EDGE_HIGH**	RW	0x0
6	**GPIO17_EDGE_LOW**	RW	0x0
5	**GPIO17_LEVEL_HIGH**	RW	0x0
4	**GPIO17_LEVEL_LOW**	RW	0x0
3	**GPIO16_EDGE_HIGH**	RW	0x0
2	**GPIO16_EDGE_LOW**	RW	0x0
1	**GPIO16_LEVEL_HIGH**	RW	0x0
0	**GPIO16_LEVEL_LOW**	RW	0x0

IO_BANK0: PROC1_INTE3 Register

Offset: 0x13c

Description

Interrupt Enable for proc1

Table 305. PROC1_INTE3 Register

Bits	Description	Type	Reset
31:24	Reserved.	-	-
23	**GPIO29_EDGE_HIGH**	RW	0x0
22	**GPIO29_EDGE_LOW**	RW	0x0
21	**GPIO29_LEVEL_HIGH**	RW	0x0
20	**GPIO29_LEVEL_LOW**	RW	0x0
19	**GPIO28_EDGE_HIGH**	RW	0x0
18	**GPIO28_EDGE_LOW**	RW	0x0
17	**GPIO28_LEVEL_HIGH**	RW	0x0
16	**GPIO28_LEVEL_LOW**	RW	0x0
15	**GPIO27_EDGE_HIGH**	RW	0x0
14	**GPIO27_EDGE_LOW**	RW	0x0
13	**GPIO27_LEVEL_HIGH**	RW	0x0
12	**GPIO27_LEVEL_LOW**	RW	0x0
11	**GPIO26_EDGE_HIGH**	RW	0x0
10	**GPIO26_EDGE_LOW**	RW	0x0
9	**GPIO26_LEVEL_HIGH**	RW	0x0
8	**GPIO26_LEVEL_LOW**	RW	0x0
7	**GPIO25_EDGE_HIGH**	RW	0x0
6	**GPIO25_EDGE_LOW**	RW	0x0

Bits	Description	Type	Reset
5	**GPIO25_LEVEL_HIGH**	RW	0x0
4	**GPIO25_LEVEL_LOW**	RW	0x0
3	**GPIO24_EDGE_HIGH**	RW	0x0
2	**GPIO24_EDGE_LOW**	RW	0x0
1	**GPIO24_LEVEL_HIGH**	RW	0x0
0	**GPIO24_LEVEL_LOW**	RW	0x0

IO_BANK0: PROC1_INTF0 Register

Offset: 0x140

Description

Interrupt Force for proc1

Table 306. PROC1_INTF0 Register

Bits	Description	Type	Reset
31	**GPIO7_EDGE_HIGH**	RW	0x0
30	**GPIO7_EDGE_LOW**	RW	0x0
29	**GPIO7_LEVEL_HIGH**	RW	0x0
28	**GPIO7_LEVEL_LOW**	RW	0x0
27	**GPIO6_EDGE_HIGH**	RW	0x0
26	**GPIO6_EDGE_LOW**	RW	0x0
25	**GPIO6_LEVEL_HIGH**	RW	0x0
24	**GPIO6_LEVEL_LOW**	RW	0x0
23	**GPIO5_EDGE_HIGH**	RW	0x0
22	**GPIO5_EDGE_LOW**	RW	0x0
21	**GPIO5_LEVEL_HIGH**	RW	0x0
20	**GPIO5_LEVEL_LOW**	RW	0x0
19	**GPIO4_EDGE_HIGH**	RW	0x0
18	**GPIO4_EDGE_LOW**	RW	0x0
17	**GPIO4_LEVEL_HIGH**	RW	0x0
16	**GPIO4_LEVEL_LOW**	RW	0x0
15	**GPIO3_EDGE_HIGH**	RW	0x0
14	**GPIO3_EDGE_LOW**	RW	0x0
13	**GPIO3_LEVEL_HIGH**	RW	0x0
12	**GPIO3_LEVEL_LOW**	RW	0x0
11	**GPIO2_EDGE_HIGH**	RW	0x0
10	**GPIO2_EDGE_LOW**	RW	0x0
9	**GPIO2_LEVEL_HIGH**	RW	0x0
8	**GPIO2_LEVEL_LOW**	RW	0x0

Bits	Description	Type	Reset
7	**GPIO1_EDGE_HIGH**	RW	0x0
6	**GPIO1_EDGE_LOW**	RW	0x0
5	**GPIO1_LEVEL_HIGH**	RW	0x0
4	**GPIO1_LEVEL_LOW**	RW	0x0
3	**GPIO0_EDGE_HIGH**	RW	0x0
2	**GPIO0_EDGE_LOW**	RW	0x0
1	**GPIO0_LEVEL_HIGH**	RW	0x0
0	**GPIO0_LEVEL_LOW**	RW	0x0

IO_BANK0: PROC1_INTF1 Register

Offset: 0x144

Description

Interrupt Force for proc1

Table 307. PROC1_INTF1 Register

Bits	Description	Type	Reset
31	**GPIO15_EDGE_HIGH**	RW	0x0
30	**GPIO15_EDGE_LOW**	RW	0x0
29	**GPIO15_LEVEL_HIGH**	RW	0x0
28	**GPIO15_LEVEL_LOW**	RW	0x0
27	**GPIO14_EDGE_HIGH**	RW	0x0
26	**GPIO14_EDGE_LOW**	RW	0x0
25	**GPIO14_LEVEL_HIGH**	RW	0x0
24	**GPIO14_LEVEL_LOW**	RW	0x0
23	**GPIO13_EDGE_HIGH**	RW	0x0
22	**GPIO13_EDGE_LOW**	RW	0x0
21	**GPIO13_LEVEL_HIGH**	RW	0x0
20	**GPIO13_LEVEL_LOW**	RW	0x0
19	**GPIO12_EDGE_HIGH**	RW	0x0
18	**GPIO12_EDGE_LOW**	RW	0x0
17	**GPIO12_LEVEL_HIGH**	RW	0x0
16	**GPIO12_LEVEL_LOW**	RW	0x0
15	**GPIO11_EDGE_HIGH**	RW	0x0
14	**GPIO11_EDGE_LOW**	RW	0x0
13	**GPIO11_LEVEL_HIGH**	RW	0x0
12	**GPIO11_LEVEL_LOW**	RW	0x0
11	**GPIO10_EDGE_HIGH**	RW	0x0
10	**GPIO10_EDGE_LOW**	RW	0x0

Bits	Description	Type	Reset
9	**GPIO10_LEVEL_HIGH**	RW	0x0
8	**GPIO10_LEVEL_LOW**	RW	0x0
7	**GPIO9_EDGE_HIGH**	RW	0x0
6	**GPIO9_EDGE_LOW**	RW	0x0
5	**GPIO9_LEVEL_HIGH**	RW	0x0
4	**GPIO9_LEVEL_LOW**	RW	0x0
3	**GPIO8_EDGE_HIGH**	RW	0x0
2	**GPIO8_EDGE_LOW**	RW	0x0
1	**GPIO8_LEVEL_HIGH**	RW	0x0
0	**GPIO8_LEVEL_LOW**	RW	0x0

IO_BANK0: PROC1_INTF2 Register

Offset: 0x148

Description

Interrupt Force for proc1

Table 308. PROC1_INTF2 Register

Bits	Description	Type	Reset
31	**GPIO23_EDGE_HIGH**	RW	0x0
30	**GPIO23_EDGE_LOW**	RW	0x0
29	**GPIO23_LEVEL_HIGH**	RW	0x0
28	**GPIO23_LEVEL_LOW**	RW	0x0
27	**GPIO22_EDGE_HIGH**	RW	0x0
26	**GPIO22_EDGE_LOW**	RW	0x0
25	**GPIO22_LEVEL_HIGH**	RW	0x0
24	**GPIO22_LEVEL_LOW**	RW	0x0
23	**GPIO21_EDGE_HIGH**	RW	0x0
22	**GPIO21_EDGE_LOW**	RW	0x0
21	**GPIO21_LEVEL_HIGH**	RW	0x0
20	**GPIO21_LEVEL_LOW**	RW	0x0
19	**GPIO20_EDGE_HIGH**	RW	0x0
18	**GPIO20_EDGE_LOW**	RW	0x0
17	**GPIO20_LEVEL_HIGH**	RW	0x0
16	**GPIO20_LEVEL_LOW**	RW	0x0
15	**GPIO19_EDGE_HIGH**	RW	0x0
14	**GPIO19_EDGE_LOW**	RW	0x0
13	**GPIO19_LEVEL_HIGH**	RW	0x0
12	**GPIO19_LEVEL_LOW**	RW	0x0

Bits	Description	Type	Reset
11	**GPIO18_EDGE_HIGH**	RW	0x0
10	**GPIO18_EDGE_LOW**	RW	0x0
9	**GPIO18_LEVEL_HIGH**	RW	0x0
8	**GPIO18_LEVEL_LOW**	RW	0x0
7	**GPIO17_EDGE_HIGH**	RW	0x0
6	**GPIO17_EDGE_LOW**	RW	0x0
5	**GPIO17_LEVEL_HIGH**	RW	0x0
4	**GPIO17_LEVEL_LOW**	RW	0x0
3	**GPIO16_EDGE_HIGH**	RW	0x0
2	**GPIO16_EDGE_LOW**	RW	0x0
1	**GPIO16_LEVEL_HIGH**	RW	0x0
0	**GPIO16_LEVEL_LOW**	RW	0x0

IO_BANK0: PROC1_INTF3 Register

Offset: 0x14c

Description

Interrupt Force for proc1

Table 309. PROC1_INTF3 Register

Bits	Description	Type	Reset
31:24	Reserved.	-	-
23	**GPIO29_EDGE_HIGH**	RW	0x0
22	**GPIO29_EDGE_LOW**	RW	0x0
21	**GPIO29_LEVEL_HIGH**	RW	0x0
20	**GPIO29_LEVEL_LOW**	RW	0x0
19	**GPIO28_EDGE_HIGH**	RW	0x0
18	**GPIO28_EDGE_LOW**	RW	0x0
17	**GPIO28_LEVEL_HIGH**	RW	0x0
16	**GPIO28_LEVEL_LOW**	RW	0x0
15	**GPIO27_EDGE_HIGH**	RW	0x0
14	**GPIO27_EDGE_LOW**	RW	0x0
13	**GPIO27_LEVEL_HIGH**	RW	0x0
12	**GPIO27_LEVEL_LOW**	RW	0x0
11	**GPIO26_EDGE_HIGH**	RW	0x0
10	**GPIO26_EDGE_LOW**	RW	0x0
9	**GPIO26_LEVEL_HIGH**	RW	0x0
8	**GPIO26_LEVEL_LOW**	RW	0x0
7	**GPIO25_EDGE_HIGH**	RW	0x0

Bits	Description	Type	Reset
6	**GPIO25_EDGE_LOW**	RW	0x0
5	**GPIO25_LEVEL_HIGH**	RW	0x0
4	**GPIO25_LEVEL_LOW**	RW	0x0
3	**GPIO24_EDGE_HIGH**	RW	0x0
2	**GPIO24_EDGE_LOW**	RW	0x0
1	**GPIO24_LEVEL_HIGH**	RW	0x0
0	**GPIO24_LEVEL_LOW**	RW	0x0

IO_BANK0: PROC1_INTS0 Register

Offset: 0x150

Description

Interrupt status after masking & forcing for proc1

Table 310. PROC1_INTS0 Register

Bits	Description	Type	Reset
31	**GPIO7_EDGE_HIGH**	RO	0x0
30	**GPIO7_EDGE_LOW**	RO	0x0
29	**GPIO7_LEVEL_HIGH**	RO	0x0
28	**GPIO7_LEVEL_LOW**	RO	0x0
27	**GPIO6_EDGE_HIGH**	RO	0x0
26	**GPIO6_EDGE_LOW**	RO	0x0
25	**GPIO6_LEVEL_HIGH**	RO	0x0
24	**GPIO6_LEVEL_LOW**	RO	0x0
23	**GPIO5_EDGE_HIGH**	RO	0x0
22	**GPIO5_EDGE_LOW**	RO	0x0
21	**GPIO5_LEVEL_HIGH**	RO	0x0
20	**GPIO5_LEVEL_LOW**	RO	0x0
19	**GPIO4_EDGE_HIGH**	RO	0x0
18	**GPIO4_EDGE_LOW**	RO	0x0
17	**GPIO4_LEVEL_HIGH**	RO	0x0
16	**GPIO4_LEVEL_LOW**	RO	0x0
15	**GPIO3_EDGE_HIGH**	RO	0x0
14	**GPIO3_EDGE_LOW**	RO	0x0
13	**GPIO3_LEVEL_HIGH**	RO	0x0
12	**GPIO3_LEVEL_LOW**	RO	0x0
11	**GPIO2_EDGE_HIGH**	RO	0x0
10	**GPIO2_EDGE_LOW**	RO	0x0
9	**GPIO2_LEVEL_HIGH**	RO	0x0

Bits	Description	Type	Reset
8	**GPIO2_LEVEL_LOW**	RO	0x0
7	**GPIO1_EDGE_HIGH**	RO	0x0
6	**GPIO1_EDGE_LOW**	RO	0x0
5	**GPIO1_LEVEL_HIGH**	RO	0x0
4	**GPIO1_LEVEL_LOW**	RO	0x0
3	**GPIO0_EDGE_HIGH**	RO	0x0
2	**GPIO0_EDGE_LOW**	RO	0x0
1	**GPIO0_LEVEL_HIGH**	RO	0x0
0	**GPIO0_LEVEL_LOW**	RO	0x0

IO_BANK0: PROC1_INTS1 Register

Offset: 0x154

Description

Interrupt status after masking & forcing for proc1

Table 311. PROC1_INTS1 Register

Bits	Description	Type	Reset
31	**GPIO15_EDGE_HIGH**	RO	0x0
30	**GPIO15_EDGE_LOW**	RO	0x0
29	**GPIO15_LEVEL_HIGH**	RO	0x0
28	**GPIO15_LEVEL_LOW**	RO	0x0
27	**GPIO14_EDGE_HIGH**	RO	0x0
26	**GPIO14_EDGE_LOW**	RO	0x0
25	**GPIO14_LEVEL_HIGH**	RO	0x0
24	**GPIO14_LEVEL_LOW**	RO	0x0
23	**GPIO13_EDGE_HIGH**	RO	0x0
22	**GPIO13_EDGE_LOW**	RO	0x0
21	**GPIO13_LEVEL_HIGH**	RO	0x0
20	**GPIO13_LEVEL_LOW**	RO	0x0
19	**GPIO12_EDGE_HIGH**	RO	0x0
18	**GPIO12_EDGE_LOW**	RO	0x0
17	**GPIO12_LEVEL_HIGH**	RO	0x0
16	**GPIO12_LEVEL_LOW**	RO	0x0
15	**GPIO11_EDGE_HIGH**	RO	0x0
14	**GPIO11_EDGE_LOW**	RO	0x0
13	**GPIO11_LEVEL_HIGH**	RO	0x0
12	**GPIO11_LEVEL_LOW**	RO	0x0
11	**GPIO10_EDGE_HIGH**	RO	0x0

Bits	Description	Type	Reset
10	**GPIO10_EDGE_LOW**	RO	0x0
9	**GPIO10_LEVEL_HIGH**	RO	0x0
8	**GPIO10_LEVEL_LOW**	RO	0x0
7	**GPIO9_EDGE_HIGH**	RO	0x0
6	**GPIO9_EDGE_LOW**	RO	0x0
5	**GPIO9_LEVEL_HIGH**	RO	0x0
4	**GPIO9_LEVEL_LOW**	RO	0x0
3	**GPIO8_EDGE_HIGH**	RO	0x0
2	**GPIO8_EDGE_LOW**	RO	0x0
1	**GPIO8_LEVEL_HIGH**	RO	0x0
0	**GPIO8_LEVEL_LOW**	RO	0x0

IO_BANK0: PROC1_INTS2 Register

Offset: 0x158

Description

Interrupt status after masking & forcing for proc1

Table 312. PROC1_INTS2 Register

Bits	Description	Type	Reset
31	**GPIO23_EDGE_HIGH**	RO	0x0
30	**GPIO23_EDGE_LOW**	RO	0x0
29	**GPIO23_LEVEL_HIGH**	RO	0x0
28	**GPIO23_LEVEL_LOW**	RO	0x0
27	**GPIO22_EDGE_HIGH**	RO	0x0
26	**GPIO22_EDGE_LOW**	RO	0x0
25	**GPIO22_LEVEL_HIGH**	RO	0x0
24	**GPIO22_LEVEL_LOW**	RO	0x0
23	**GPIO21_EDGE_HIGH**	RO	0x0
22	**GPIO21_EDGE_LOW**	RO	0x0
21	**GPIO21_LEVEL_HIGH**	RO	0x0
20	**GPIO21_LEVEL_LOW**	RO	0x0
19	**GPIO20_EDGE_HIGH**	RO	0x0
18	**GPIO20_EDGE_LOW**	RO	0x0
17	**GPIO20_LEVEL_HIGH**	RO	0x0
16	**GPIO20_LEVEL_LOW**	RO	0x0
15	**GPIO19_EDGE_HIGH**	RO	0x0
14	**GPIO19_EDGE_LOW**	RO	0x0
13	**GPIO19_LEVEL_HIGH**	RO	0x0

Bits	Description	Type	Reset
12	**GPIO19_LEVEL_LOW**	RO	0x0
11	**GPIO18_EDGE_HIGH**	RO	0x0
10	**GPIO18_EDGE_LOW**	RO	0x0
9	**GPIO18_LEVEL_HIGH**	RO	0x0
8	**GPIO18_LEVEL_LOW**	RO	0x0
7	**GPIO17_EDGE_HIGH**	RO	0x0
6	**GPIO17_EDGE_LOW**	RO	0x0
5	**GPIO17_LEVEL_HIGH**	RO	0x0
4	**GPIO17_LEVEL_LOW**	RO	0x0
3	**GPIO16_EDGE_HIGH**	RO	0x0
2	**GPIO16_EDGE_LOW**	RO	0x0
1	**GPIO16_LEVEL_HIGH**	RO	0x0
0	**GPIO16_LEVEL_LOW**	RO	0x0

IO_BANK0: PROC1_INTS3 Register

Offset: 0x15c

Description

Interrupt status after masking & forcing for proc1

Table 313. PROC1_INTS3 Register

Bits	Description	Type	Reset
31:24	Reserved.	-	-
23	**GPIO29_EDGE_HIGH**	RO	0x0
22	**GPIO29_EDGE_LOW**	RO	0x0
21	**GPIO29_LEVEL_HIGH**	RO	0x0
20	**GPIO29_LEVEL_LOW**	RO	0x0
19	**GPIO28_EDGE_HIGH**	RO	0x0
18	**GPIO28_EDGE_LOW**	RO	0x0
17	**GPIO28_LEVEL_HIGH**	RO	0x0
16	**GPIO28_LEVEL_LOW**	RO	0x0
15	**GPIO27_EDGE_HIGH**	RO	0x0
14	**GPIO27_EDGE_LOW**	RO	0x0
13	**GPIO27_LEVEL_HIGH**	RO	0x0
12	**GPIO27_LEVEL_LOW**	RO	0x0
11	**GPIO26_EDGE_HIGH**	RO	0x0
10	**GPIO26_EDGE_LOW**	RO	0x0
9	**GPIO26_LEVEL_HIGH**	RO	0x0
8	**GPIO26_LEVEL_LOW**	RO	0x0

Bits	Description	Type	Reset
7	**GPIO25_EDGE_HIGH**	RO	0x0
6	**GPIO25_EDGE_LOW**	RO	0x0
5	**GPIO25_LEVEL_HIGH**	RO	0x0
4	**GPIO25_LEVEL_LOW**	RO	0x0
3	**GPIO24_EDGE_HIGH**	RO	0x0
2	**GPIO24_EDGE_LOW**	RO	0x0
1	**GPIO24_LEVEL_HIGH**	RO	0x0
0	**GPIO24_LEVEL_LOW**	RO	0x0

IO_BANK0: DORMANT_WAKE_INTE0 Register

Offset: 0x160

Description

Interrupt Enable for dormant_wake

Table 314. DORMANT_WAKE_INTE0 Register

Bits	Description	Type	Reset
31	**GPIO7_EDGE_HIGH**	RW	0x0
30	**GPIO7_EDGE_LOW**	RW	0x0
29	**GPIO7_LEVEL_HIGH**	RW	0x0
28	**GPIO7_LEVEL_LOW**	RW	0x0
27	**GPIO6_EDGE_HIGH**	RW	0x0
26	**GPIO6_EDGE_LOW**	RW	0x0
25	**GPIO6_LEVEL_HIGH**	RW	0x0
24	**GPIO6_LEVEL_LOW**	RW	0x0
23	**GPIO5_EDGE_HIGH**	RW	0x0
22	**GPIO5_EDGE_LOW**	RW	0x0
21	**GPIO5_LEVEL_HIGH**	RW	0x0
20	**GPIO5_LEVEL_LOW**	RW	0x0
19	**GPIO4_EDGE_HIGH**	RW	0x0
18	**GPIO4_EDGE_LOW**	RW	0x0
17	**GPIO4_LEVEL_HIGH**	RW	0x0
16	**GPIO4_LEVEL_LOW**	RW	0x0
15	**GPIO3_EDGE_HIGH**	RW	0x0
14	**GPIO3_EDGE_LOW**	RW	0x0
13	**GPIO3_LEVEL_HIGH**	RW	0x0
12	**GPIO3_LEVEL_LOW**	RW	0x0
11	**GPIO2_EDGE_HIGH**	RW	0x0
10	**GPIO2_EDGE_LOW**	RW	0x0

Bits	Description	Type	Reset
9	**GPIO2_LEVEL_HIGH**	RW	0x0
8	**GPIO2_LEVEL_LOW**	RW	0x0
7	**GPIO1_EDGE_HIGH**	RW	0x0
6	**GPIO1_EDGE_LOW**	RW	0x0
5	**GPIO1_LEVEL_HIGH**	RW	0x0
4	**GPIO1_LEVEL_LOW**	RW	0x0
3	**GPIO0_EDGE_HIGH**	RW	0x0
2	**GPIO0_EDGE_LOW**	RW	0x0
1	**GPIO0_LEVEL_HIGH**	RW	0x0
0	**GPIO0_LEVEL_LOW**	RW	0x0

IO_BANK0: DORMANT_WAKE_INTE1 Register

Offset: 0x164

Description

Interrupt Enable for dormant_wake

Table 315. DORMANT_WAKE_INTE1 Register

Bits	Description	Type	Reset
31	**GPIO15_EDGE_HIGH**	RW	0x0
30	**GPIO15_EDGE_LOW**	RW	0x0
29	**GPIO15_LEVEL_HIGH**	RW	0x0
28	**GPIO15_LEVEL_LOW**	RW	0x0
27	**GPIO14_EDGE_HIGH**	RW	0x0
26	**GPIO14_EDGE_LOW**	RW	0x0
25	**GPIO14_LEVEL_HIGH**	RW	0x0
24	**GPIO14_LEVEL_LOW**	RW	0x0
23	**GPIO13_EDGE_HIGH**	RW	0x0
22	**GPIO13_EDGE_LOW**	RW	0x0
21	**GPIO13_LEVEL_HIGH**	RW	0x0
20	**GPIO13_LEVEL_LOW**	RW	0x0
19	**GPIO12_EDGE_HIGH**	RW	0x0
18	**GPIO12_EDGE_LOW**	RW	0x0
17	**GPIO12_LEVEL_HIGH**	RW	0x0
16	**GPIO12_LEVEL_LOW**	RW	0x0
15	**GPIO11_EDGE_HIGH**	RW	0x0
14	**GPIO11_EDGE_LOW**	RW	0x0
13	**GPIO11_LEVEL_HIGH**	RW	0x0
12	**GPIO11_LEVEL_LOW**	RW	0x0

Bits	Description	Type	Reset
11	**GPIO10_EDGE_HIGH**	RW	0x0
10	**GPIO10_EDGE_LOW**	RW	0x0
9	**GPIO10_LEVEL_HIGH**	RW	0x0
8	**GPIO10_LEVEL_LOW**	RW	0x0
7	**GPIO9_EDGE_HIGH**	RW	0x0
6	**GPIO9_EDGE_LOW**	RW	0x0
5	**GPIO9_LEVEL_HIGH**	RW	0x0
4	**GPIO9_LEVEL_LOW**	RW	0x0
3	**GPIO8_EDGE_HIGH**	RW	0x0
2	**GPIO8_EDGE_LOW**	RW	0x0
1	**GPIO8_LEVEL_HIGH**	RW	0x0
0	**GPIO8_LEVEL_LOW**	RW	0x0

IO_BANK0: DORMANT_WAKE_INTE2 Register

Offset: 0x168

Description

Interrupt Enable for dormant_wake

Table 316. DORMANT_WAKE_INTE2 Register

Bits	Description	Type	Reset
31	**GPIO23_EDGE_HIGH**	RW	0x0
30	**GPIO23_EDGE_LOW**	RW	0x0
29	**GPIO23_LEVEL_HIGH**	RW	0x0
28	**GPIO23_LEVEL_LOW**	RW	0x0
27	**GPIO22_EDGE_HIGH**	RW	0x0
26	**GPIO22_EDGE_LOW**	RW	0x0
25	**GPIO22_LEVEL_HIGH**	RW	0x0
24	**GPIO22_LEVEL_LOW**	RW	0x0
23	**GPIO21_EDGE_HIGH**	RW	0x0
22	**GPIO21_EDGE_LOW**	RW	0x0
21	**GPIO21_LEVEL_HIGH**	RW	0x0
20	**GPIO21_LEVEL_LOW**	RW	0x0
19	**GPIO20_EDGE_HIGH**	RW	0x0
18	**GPIO20_EDGE_LOW**	RW	0x0
17	**GPIO20_LEVEL_HIGH**	RW	0x0
16	**GPIO20_LEVEL_LOW**	RW	0x0
15	**GPIO19_EDGE_HIGH**	RW	0x0
14	**GPIO19_EDGE_LOW**	RW	0x0

Bits	Description	Type	Reset
13	**GPIO19_LEVEL_HIGH**	RW	0x0
12	**GPIO19_LEVEL_LOW**	RW	0x0
11	**GPIO18_EDGE_HIGH**	RW	0x0
10	**GPIO18_EDGE_LOW**	RW	0x0
9	**GPIO18_LEVEL_HIGH**	RW	0x0
8	**GPIO18_LEVEL_LOW**	RW	0x0
7	**GPIO17_EDGE_HIGH**	RW	0x0
6	**GPIO17_EDGE_LOW**	RW	0x0
5	**GPIO17_LEVEL_HIGH**	RW	0x0
4	**GPIO17_LEVEL_LOW**	RW	0x0
3	**GPIO16_EDGE_HIGH**	RW	0x0
2	**GPIO16_EDGE_LOW**	RW	0x0
1	**GPIO16_LEVEL_HIGH**	RW	0x0
0	**GPIO16_LEVEL_LOW**	RW	0x0

IO_BANK0: DORMANT_WAKE_INTE3 Register

Offset: 0x16c

Description

Interrupt Enable for dormant_wake

Table 317. DORMANT_WAKE_INTE3 Register

Bits	Description	Type	Reset
31:24	Reserved.	-	-
23	**GPIO29_EDGE_HIGH**	RW	0x0
22	**GPIO29_EDGE_LOW**	RW	0x0
21	**GPIO29_LEVEL_HIGH**	RW	0x0
20	**GPIO29_LEVEL_LOW**	RW	0x0
19	**GPIO28_EDGE_HIGH**	RW	0x0
18	**GPIO28_EDGE_LOW**	RW	0x0
17	**GPIO28_LEVEL_HIGH**	RW	0x0
16	**GPIO28_LEVEL_LOW**	RW	0x0
15	**GPIO27_EDGE_HIGH**	RW	0x0
14	**GPIO27_EDGE_LOW**	RW	0x0
13	**GPIO27_LEVEL_HIGH**	RW	0x0
12	**GPIO27_LEVEL_LOW**	RW	0x0
11	**GPIO26_EDGE_HIGH**	RW	0x0
10	**GPIO26_EDGE_LOW**	RW	0x0
9	**GPIO26_LEVEL_HIGH**	RW	0x0

Bits	Description	Type	Reset
8	**GPIO26_LEVEL_LOW**	RW	0x0
7	**GPIO25_EDGE_HIGH**	RW	0x0
6	**GPIO25_EDGE_LOW**	RW	0x0
5	**GPIO25_LEVEL_HIGH**	RW	0x0
4	**GPIO25_LEVEL_LOW**	RW	0x0
3	**GPIO24_EDGE_HIGH**	RW	0x0
2	**GPIO24_EDGE_LOW**	RW	0x0
1	**GPIO24_LEVEL_HIGH**	RW	0x0
0	**GPIO24_LEVEL_LOW**	RW	0x0

IO_BANK0: DORMANT_WAKE_INTF0 Register

Offset: 0x170

Description

Interrupt Force for dormant_wake

Table 318. DORMANT_WAKE_INTF0 Register

Bits	Description	Type	Reset
31	**GPIO7_EDGE_HIGH**	RW	0x0
30	**GPIO7_EDGE_LOW**	RW	0x0
29	**GPIO7_LEVEL_HIGH**	RW	0x0
28	**GPIO7_LEVEL_LOW**	RW	0x0
27	**GPIO6_EDGE_HIGH**	RW	0x0
26	**GPIO6_EDGE_LOW**	RW	0x0
25	**GPIO6_LEVEL_HIGH**	RW	0x0
24	**GPIO6_LEVEL_LOW**	RW	0x0
23	**GPIO5_EDGE_HIGH**	RW	0x0
22	**GPIO5_EDGE_LOW**	RW	0x0
21	**GPIO5_LEVEL_HIGH**	RW	0x0
20	**GPIO5_LEVEL_LOW**	RW	0x0
19	**GPIO4_EDGE_HIGH**	RW	0x0
18	**GPIO4_EDGE_LOW**	RW	0x0
17	**GPIO4_LEVEL_HIGH**	RW	0x0
16	**GPIO4_LEVEL_LOW**	RW	0x0
15	**GPIO3_EDGE_HIGH**	RW	0x0
14	**GPIO3_EDGE_LOW**	RW	0x0
13	**GPIO3_LEVEL_HIGH**	RW	0x0
12	**GPIO3_LEVEL_LOW**	RW	0x0
11	**GPIO2_EDGE_HIGH**	RW	0x0

Bits	Description	Type	Reset
10	**GPIO2_EDGE_LOW**	RW	0x0
9	**GPIO2_LEVEL_HIGH**	RW	0x0
8	**GPIO2_LEVEL_LOW**	RW	0x0
7	**GPIO1_EDGE_HIGH**	RW	0x0
6	**GPIO1_EDGE_LOW**	RW	0x0
5	**GPIO1_LEVEL_HIGH**	RW	0x0
4	**GPIO1_LEVEL_LOW**	RW	0x0
3	**GPIO0_EDGE_HIGH**	RW	0x0
2	**GPIO0_EDGE_LOW**	RW	0x0
1	**GPIO0_LEVEL_HIGH**	RW	0x0
0	**GPIO0_LEVEL_LOW**	RW	0x0

IO_BANK0: DORMANT_WAKE_INTF1 Register

Offset: 0x174

Description

Interrupt Force for dormant_wake

Table 319. DORMANT_WAKE_INTF1 Register

Bits	Description	Type	Reset
31	**GPIO15_EDGE_HIGH**	RW	0x0
30	**GPIO15_EDGE_LOW**	RW	0x0
29	**GPIO15_LEVEL_HIGH**	RW	0x0
28	**GPIO15_LEVEL_LOW**	RW	0x0
27	**GPIO14_EDGE_HIGH**	RW	0x0
26	**GPIO14_EDGE_LOW**	RW	0x0
25	**GPIO14_LEVEL_HIGH**	RW	0x0
24	**GPIO14_LEVEL_LOW**	RW	0x0
23	**GPIO13_EDGE_HIGH**	RW	0x0
22	**GPIO13_EDGE_LOW**	RW	0x0
21	**GPIO13_LEVEL_HIGH**	RW	0x0
20	**GPIO13_LEVEL_LOW**	RW	0x0
19	**GPIO12_EDGE_HIGH**	RW	0x0
18	**GPIO12_EDGE_LOW**	RW	0x0
17	**GPIO12_LEVEL_HIGH**	RW	0x0
16	**GPIO12_LEVEL_LOW**	RW	0x0
15	**GPIO11_EDGE_HIGH**	RW	0x0
14	**GPIO11_EDGE_LOW**	RW	0x0
13	**GPIO11_LEVEL_HIGH**	RW	0x0

Bits	Description	Type	Reset
12	**GPIO11_LEVEL_LOW**	RW	0x0
11	**GPIO10_EDGE_HIGH**	RW	0x0
10	**GPIO10_EDGE_LOW**	RW	0x0
9	**GPIO10_LEVEL_HIGH**	RW	0x0
8	**GPIO10_LEVEL_LOW**	RW	0x0
7	**GPIO9_EDGE_HIGH**	RW	0x0
6	**GPIO9_EDGE_LOW**	RW	0x0
5	**GPIO9_LEVEL_HIGH**	RW	0x0
4	**GPIO9_LEVEL_LOW**	RW	0x0
3	**GPIO8_EDGE_HIGH**	RW	0x0
2	**GPIO8_EDGE_LOW**	RW	0x0
1	**GPIO8_LEVEL_HIGH**	RW	0x0
0	**GPIO8_LEVEL_LOW**	RW	0x0

IO_BANK0: DORMANT_WAKE_INTF2 Register

Offset: 0x178

Description

Interrupt Force for dormant_wake

Table 320. DORMANT_WAKE_INTF2 Register

Bits	Description	Type	Reset
31	**GPIO23_EDGE_HIGH**	RW	0x0
30	**GPIO23_EDGE_LOW**	RW	0x0
29	**GPIO23_LEVEL_HIGH**	RW	0x0
28	**GPIO23_LEVEL_LOW**	RW	0x0
27	**GPIO22_EDGE_HIGH**	RW	0x0
26	**GPIO22_EDGE_LOW**	RW	0x0
25	**GPIO22_LEVEL_HIGH**	RW	0x0
24	**GPIO22_LEVEL_LOW**	RW	0x0
23	**GPIO21_EDGE_HIGH**	RW	0x0
22	**GPIO21_EDGE_LOW**	RW	0x0
21	**GPIO21_LEVEL_HIGH**	RW	0x0
20	**GPIO21_LEVEL_LOW**	RW	0x0
19	**GPIO20_EDGE_HIGH**	RW	0x0
18	**GPIO20_EDGE_LOW**	RW	0x0
17	**GPIO20_LEVEL_HIGH**	RW	0x0
16	**GPIO20_LEVEL_LOW**	RW	0x0
15	**GPIO19_EDGE_HIGH**	RW	0x0

Bits	Description	Type	Reset
14	**GPIO19_EDGE_LOW**	RW	0x0
13	**GPIO19_LEVEL_HIGH**	RW	0x0
12	**GPIO19_LEVEL_LOW**	RW	0x0
11	**GPIO18_EDGE_HIGH**	RW	0x0
10	**GPIO18_EDGE_LOW**	RW	0x0
9	**GPIO18_LEVEL_HIGH**	RW	0x0
8	**GPIO18_LEVEL_LOW**	RW	0x0
7	**GPIO17_EDGE_HIGH**	RW	0x0
6	**GPIO17_EDGE_LOW**	RW	0x0
5	**GPIO17_LEVEL_HIGH**	RW	0x0
4	**GPIO17_LEVEL_LOW**	RW	0x0
3	**GPIO16_EDGE_HIGH**	RW	0x0
2	**GPIO16_EDGE_LOW**	RW	0x0
1	**GPIO16_LEVEL_HIGH**	RW	0x0
0	**GPIO16_LEVEL_LOW**	RW	0x0

IO_BANK0: DORMANT_WAKE_INTF3 Register

Offset: 0x17c

Description

Interrupt Force for dormant_wake

Table 321. DORMANT_WAKE_INTF3 Register

Bits	Description	Type	Reset
31:24	Reserved.	-	-
23	**GPIO29_EDGE_HIGH**	RW	0x0
22	**GPIO29_EDGE_LOW**	RW	0x0
21	**GPIO29_LEVEL_HIGH**	RW	0x0
20	**GPIO29_LEVEL_LOW**	RW	0x0
19	**GPIO28_EDGE_HIGH**	RW	0x0
18	**GPIO28_EDGE_LOW**	RW	0x0
17	**GPIO28_LEVEL_HIGH**	RW	0x0
16	**GPIO28_LEVEL_LOW**	RW	0x0
15	**GPIO27_EDGE_HIGH**	RW	0x0
14	**GPIO27_EDGE_LOW**	RW	0x0
13	**GPIO27_LEVEL_HIGH**	RW	0x0
12	**GPIO27_LEVEL_LOW**	RW	0x0
11	**GPIO26_EDGE_HIGH**	RW	0x0
10	**GPIO26_EDGE_LOW**	RW	0x0

Bits	Description	Type	Reset
9	**GPIO26_LEVEL_HIGH**	RW	0x0
8	**GPIO26_LEVEL_LOW**	RW	0x0
7	**GPIO25_EDGE_HIGH**	RW	0x0
6	**GPIO25_EDGE_LOW**	RW	0x0
5	**GPIO25_LEVEL_HIGH**	RW	0x0
4	**GPIO25_LEVEL_LOW**	RW	0x0
3	**GPIO24_EDGE_HIGH**	RW	0x0
2	**GPIO24_EDGE_LOW**	RW	0x0
1	**GPIO24_LEVEL_HIGH**	RW	0x0
0	**GPIO24_LEVEL_LOW**	RW	0x0

IO_BANK0: DORMANT_WAKE_INTS0 Register

Offset: 0x180

Description

Interrupt status after masking & forcing for dormant_wake

Table 322. DORMANT_WAKE_INTS0 Register

Bits	Description	Type	Reset
31	**GPIO7_EDGE_HIGH**	RO	0x0
30	**GPIO7_EDGE_LOW**	RO	0x0
29	**GPIO7_LEVEL_HIGH**	RO	0x0
28	**GPIO7_LEVEL_LOW**	RO	0x0
27	**GPIO6_EDGE_HIGH**	RO	0x0
26	**GPIO6_EDGE_LOW**	RO	0x0
25	**GPIO6_LEVEL_HIGH**	RO	0x0
24	**GPIO6_LEVEL_LOW**	RO	0x0
23	**GPIO5_EDGE_HIGH**	RO	0x0
22	**GPIO5_EDGE_LOW**	RO	0x0
21	**GPIO5_LEVEL_HIGH**	RO	0x0
20	**GPIO5_LEVEL_LOW**	RO	0x0
19	**GPIO4_EDGE_HIGH**	RO	0x0
18	**GPIO4_EDGE_LOW**	RO	0x0
17	**GPIO4_LEVEL_HIGH**	RO	0x0
16	**GPIO4_LEVEL_LOW**	RO	0x0
15	**GPIO3_EDGE_HIGH**	RO	0x0
14	**GPIO3_EDGE_LOW**	RO	0x0
13	**GPIO3_LEVEL_HIGH**	RO	0x0
12	**GPIO3_LEVEL_LOW**	RO	0x0

Bits	Description	Type	Reset
11	**GPIO2_EDGE_HIGH**	RO	0x0
10	**GPIO2_EDGE_LOW**	RO	0x0
9	**GPIO2_LEVEL_HIGH**	RO	0x0
8	**GPIO2_LEVEL_LOW**	RO	0x0
7	**GPIO1_EDGE_HIGH**	RO	0x0
6	**GPIO1_EDGE_LOW**	RO	0x0
5	**GPIO1_LEVEL_HIGH**	RO	0x0
4	**GPIO1_LEVEL_LOW**	RO	0x0
3	**GPIO0_EDGE_HIGH**	RO	0x0
2	**GPIO0_EDGE_LOW**	RO	0x0
1	**GPIO0_LEVEL_HIGH**	RO	0x0
0	**GPIO0_LEVEL_LOW**	RO	0x0

IO_BANK0: DORMANT_WAKE_INTS1 Register

Offset: 0x184

Description

Interrupt status after masking & forcing for dormant_wake

Table 323. DORMANT_WAKE_INTS1 Register

Bits	Description	Type	Reset
31	**GPIO15_EDGE_HIGH**	RO	0x0
30	**GPIO15_EDGE_LOW**	RO	0x0
29	**GPIO15_LEVEL_HIGH**	RO	0x0
28	**GPIO15_LEVEL_LOW**	RO	0x0
27	**GPIO14_EDGE_HIGH**	RO	0x0
26	**GPIO14_EDGE_LOW**	RO	0x0
25	**GPIO14_LEVEL_HIGH**	RO	0x0
24	**GPIO14_LEVEL_LOW**	RO	0x0
23	**GPIO13_EDGE_HIGH**	RO	0x0
22	**GPIO13_EDGE_LOW**	RO	0x0
21	**GPIO13_LEVEL_HIGH**	RO	0x0
20	**GPIO13_LEVEL_LOW**	RO	0x0
19	**GPIO12_EDGE_HIGH**	RO	0x0
18	**GPIO12_EDGE_LOW**	RO	0x0
17	**GPIO12_LEVEL_HIGH**	RO	0x0
16	**GPIO12_LEVEL_LOW**	RO	0x0
15	**GPIO11_EDGE_HIGH**	RO	0x0
14	**GPIO11_EDGE_LOW**	RO	0x0

Bits	Description	Type	Reset
13	**GPIO11_LEVEL_HIGH**	RO	0x0
12	**GPIO11_LEVEL_LOW**	RO	0x0
11	**GPIO10_EDGE_HIGH**	RO	0x0
10	**GPIO10_EDGE_LOW**	RO	0x0
9	**GPIO10_LEVEL_HIGH**	RO	0x0
8	**GPIO10_LEVEL_LOW**	RO	0x0
7	**GPIO9_EDGE_HIGH**	RO	0x0
6	**GPIO9_EDGE_LOW**	RO	0x0
5	**GPIO9_LEVEL_HIGH**	RO	0x0
4	**GPIO9_LEVEL_LOW**	RO	0x0
3	**GPIO8_EDGE_HIGH**	RO	0x0
2	**GPIO8_EDGE_LOW**	RO	0x0
1	**GPIO8_LEVEL_HIGH**	RO	0x0
0	**GPIO8_LEVEL_LOW**	RO	0x0

IO_BANK0: DORMANT_WAKE_INTS2 Register

Offset: 0x188

Description

Interrupt status after masking & forcing for dormant_wake

Table 324. DORMANT_WAKE_INTS2 Register

Bits	Description	Type	Reset
31	**GPIO23_EDGE_HIGH**	RO	0x0
30	**GPIO23_EDGE_LOW**	RO	0x0
29	**GPIO23_LEVEL_HIGH**	RO	0x0
28	**GPIO23_LEVEL_LOW**	RO	0x0
27	**GPIO22_EDGE_HIGH**	RO	0x0
26	**GPIO22_EDGE_LOW**	RO	0x0
25	**GPIO22_LEVEL_HIGH**	RO	0x0
24	**GPIO22_LEVEL_LOW**	RO	0x0
23	**GPIO21_EDGE_HIGH**	RO	0x0
22	**GPIO21_EDGE_LOW**	RO	0x0
21	**GPIO21_LEVEL_HIGH**	RO	0x0
20	**GPIO21_LEVEL_LOW**	RO	0x0
19	**GPIO20_EDGE_HIGH**	RO	0x0
18	**GPIO20_EDGE_LOW**	RO	0x0
17	**GPIO20_LEVEL_HIGH**	RO	0x0
16	**GPIO20_LEVEL_LOW**	RO	0x0

Bits	Description	Type	Reset
15	**GPIO19_EDGE_HIGH**	RO	0x0
14	**GPIO19_EDGE_LOW**	RO	0x0
13	**GPIO19_LEVEL_HIGH**	RO	0x0
12	**GPIO19_LEVEL_LOW**	RO	0x0
11	**GPIO18_EDGE_HIGH**	RO	0x0
10	**GPIO18_EDGE_LOW**	RO	0x0
9	**GPIO18_LEVEL_HIGH**	RO	0x0
8	**GPIO18_LEVEL_LOW**	RO	0x0
7	**GPIO17_EDGE_HIGH**	RO	0x0
6	**GPIO17_EDGE_LOW**	RO	0x0
5	**GPIO17_LEVEL_HIGH**	RO	0x0
4	**GPIO17_LEVEL_LOW**	RO	0x0
3	**GPIO16_EDGE_HIGH**	RO	0x0
2	**GPIO16_EDGE_LOW**	RO	0x0
1	**GPIO16_LEVEL_HIGH**	RO	0x0
0	**GPIO16_LEVEL_LOW**	RO	0x0

IO_BANK0: DORMANT_WAKE_INTS3 Register

Offset: 0x18c

Description

Interrupt status after masking & forcing for dormant_wake

Table 325. DORMANT_WAKE_INTS3 Register

Bits	Description	Type	Reset
31:24	Reserved.	-	-
23	**GPIO29_EDGE_HIGH**	RO	0x0
22	**GPIO29_EDGE_LOW**	RO	0x0
21	**GPIO29_LEVEL_HIGH**	RO	0x0
20	**GPIO29_LEVEL_LOW**	RO	0x0
19	**GPIO28_EDGE_HIGH**	RO	0x0
18	**GPIO28_EDGE_LOW**	RO	0x0
17	**GPIO28_LEVEL_HIGH**	RO	0x0
16	**GPIO28_LEVEL_LOW**	RO	0x0
15	**GPIO27_EDGE_HIGH**	RO	0x0
14	**GPIO27_EDGE_LOW**	RO	0x0
13	**GPIO27_LEVEL_HIGH**	RO	0x0
12	**GPIO27_LEVEL_LOW**	RO	0x0
11	**GPIO26_EDGE_HIGH**	RO	0x0

Bits	Description	Type	Reset
10	**GPIO26_EDGE_LOW**	RO	0x0
9	**GPIO26_LEVEL_HIGH**	RO	0x0
8	**GPIO26_LEVEL_LOW**	RO	0x0
7	**GPIO25_EDGE_HIGH**	RO	0x0
6	**GPIO25_EDGE_LOW**	RO	0x0
5	**GPIO25_LEVEL_HIGH**	RO	0x0
4	**GPIO25_LEVEL_LOW**	RO	0x0
3	**GPIO24_EDGE_HIGH**	RO	0x0
2	**GPIO24_EDGE_LOW**	RO	0x0
1	**GPIO24_LEVEL_HIGH**	RO	0x0
0	**GPIO24_LEVEL_LOW**	RO	0x0

2.19.6.2. IO - QSPI Bank

The QSPI Bank IO registers start at a base address of `0x40018000` (defined as IO_QSPI_BASE in SDK).

Table 326. List of IO_QSPI registers

Offset	Name	Info
0x00	GPIO_QSPI_SCLK_STATUS	GPIO status
0x04	GPIO_QSPI_SCLK_CTRL	GPIO control including function select and overrides.
0x08	GPIO_QSPI_SS_STATUS	GPIO status
0x0c	GPIO_QSPI_SS_CTRL	GPIO control including function select and overrides.
0x10	GPIO_QSPI_SD0_STATUS	GPIO status
0x14	GPIO_QSPI_SD0_CTRL	GPIO control including function select and overrides.
0x18	GPIO_QSPI_SD1_STATUS	GPIO status
0x1c	GPIO_QSPI_SD1_CTRL	GPIO control including function select and overrides.
0x20	GPIO_QSPI_SD2_STATUS	GPIO status
0x24	GPIO_QSPI_SD2_CTRL	GPIO control including function select and overrides.
0x28	GPIO_QSPI_SD3_STATUS	GPIO status
0x2c	GPIO_QSPI_SD3_CTRL	GPIO control including function select and overrides.
0x30	INTR	Raw Interrupts
0x34	PROC0_INTE	Interrupt Enable for proc0
0x38	PROC0_INTF	Interrupt Force for proc0
0x3c	PROC0_INTS	Interrupt status after masking & forcing for proc0
0x40	PROC1_INTE	Interrupt Enable for proc1
0x44	PROC1_INTF	Interrupt Force for proc1
0x48	PROC1_INTS	Interrupt status after masking & forcing for proc1
0x4c	DORMANT_WAKE_INTE	Interrupt Enable for dormant_wake

Offset	Name	Info
0x50	DORMANT_WAKE_INTF	Interrupt Force for dormant_wake
0x54	DORMANT_WAKE_INTS	Interrupt status after masking & forcing for dormant_wake

IO_QSPI: GPIO_QSPI_SCLK_STATUS, GPIO_QSPI_SS_STATUS, ..., GPIO_QSPI_SD2_STATUS, GPIO_QSPI_SD3_STATUS Registers

Offsets: 0x00, 0x08, ..., 0x20, 0x28

Description

GPIO status

Table 327. GPIO_QSPI_SCLK_STATUS, GPIO_QSPI_SS_STATUS, ..., GPIO_QSPI_SD2_STATUS, GPIO_QSPI_SD3_STATUS Registers

Bits	Description	Type	Reset
31:27	Reserved.	-	-
26	**IRQTOPROC**: interrupt to processors, after override is applied	RO	0x0
25	Reserved.	-	-
24	**IRQFROMPAD**: interrupt from pad before override is applied	RO	0x0
23:20	Reserved.	-	-
19	**INTOPERI**: input signal to peripheral, after override is applied	RO	0x0
18	Reserved.	-	-
17	**INFROMPAD**: input signal from pad, before override is applied	RO	0x0
16:14	Reserved.	-	-
13	**OETOPAD**: output enable to pad after register override is applied	RO	0x0
12	**OEFROMPERI**: output enable from selected peripheral, before register override is applied	RO	0x0
11:10	Reserved.	-	-
9	**OUTTOPAD**: output signal to pad after register override is applied	RO	0x0
8	**OUTFROMPERI**: output signal from selected peripheral, before register override is applied	RO	0x0
7:0	Reserved.	-	-

IO_QSPI: GPIO_QSPI_SCLK_CTRL, GPIO_QSPI_SS_CTRL, ..., GPIO_QSPI_SD2_CTRL, GPIO_QSPI_SD3_CTRL Registers

Offsets: 0x04, 0x0c, ..., 0x24, 0x2c

Description

GPIO control including function select and overrides.

Table 328. GPIO_QSPI_SCLK_CTRL, GPIO_QSPI_SS_CTRL, ..., GPIO_QSPI_SD2_CTRL, GPIO_QSPI_SD3_CTRL Registers

Bits	Description	Type	Reset
31:30	Reserved.	-	-
29:28	**IRQOVER**	RW	0x0
	Enumerated values:		
	0x0 → NORMAL: don't invert the interrupt		

Bits	Description	Type	Reset
	0x1 → INVERT: invert the interrupt		
	0x2 → LOW: drive interrupt low		
	0x3 → HIGH: drive interrupt high		
27:18	Reserved.	-	-
17:16	**INOVER**	RW	0x0
	Enumerated values:		
	0x0 → NORMAL: don't invert the peri input		
	0x1 → INVERT: invert the peri input		
	0x2 → LOW: drive peri input low		
	0x3 → HIGH: drive peri input high		
15:14	Reserved.	-	-
13:12	**OEOVER**	RW	0x0
	Enumerated values:		
	0x0 → NORMAL: drive output enable from peripheral signal selected by funcsel		
	0x1 → INVERT: drive output enable from inverse of peripheral signal selected by funcsel		
	0x2 → DISABLE: disable output		
	0x3 → ENABLE: enable output		
11:10	Reserved.	-	-
9:8	**OUTOVER**	RW	0x0
	Enumerated values:		
	0x0 → NORMAL: drive output from peripheral signal selected by funcsel		
	0x1 → INVERT: drive output from inverse of peripheral signal selected by funcsel		
	0x2 → LOW: drive output low		
	0x3 → HIGH: drive output high		
7:5	Reserved.	-	-
4:0	**FUNCSEL**: Function select. 31 == NULL. See GPIO function table for available functions.	RW	0x1f

IO_QSPI: INTR Register

Offset: 0x30

Description

Raw Interrupts

Table 329. INTR Register

Bits	Description	Type	Reset
31:24	Reserved.	-	-
23	**GPIO_QSPI_SD3_EDGE_HIGH**	WC	0x0

Bits	Description	Type	Reset
22	**GPIO_QSPI_SD3_EDGE_LOW**	WC	0x0
21	**GPIO_QSPI_SD3_LEVEL_HIGH**	RO	0x0
20	**GPIO_QSPI_SD3_LEVEL_LOW**	RO	0x0
19	**GPIO_QSPI_SD2_EDGE_HIGH**	WC	0x0
18	**GPIO_QSPI_SD2_EDGE_LOW**	WC	0x0
17	**GPIO_QSPI_SD2_LEVEL_HIGH**	RO	0x0
16	**GPIO_QSPI_SD2_LEVEL_LOW**	RO	0x0
15	**GPIO_QSPI_SD1_EDGE_HIGH**	WC	0x0
14	**GPIO_QSPI_SD1_EDGE_LOW**	WC	0x0
13	**GPIO_QSPI_SD1_LEVEL_HIGH**	RO	0x0
12	**GPIO_QSPI_SD1_LEVEL_LOW**	RO	0x0
11	**GPIO_QSPI_SD0_EDGE_HIGH**	WC	0x0
10	**GPIO_QSPI_SD0_EDGE_LOW**	WC	0x0
9	**GPIO_QSPI_SD0_LEVEL_HIGH**	RO	0x0
8	**GPIO_QSPI_SD0_LEVEL_LOW**	RO	0x0
7	**GPIO_QSPI_SS_EDGE_HIGH**	WC	0x0
6	**GPIO_QSPI_SS_EDGE_LOW**	WC	0x0
5	**GPIO_QSPI_SS_LEVEL_HIGH**	RO	0x0
4	**GPIO_QSPI_SS_LEVEL_LOW**	RO	0x0
3	**GPIO_QSPI_SCLK_EDGE_HIGH**	WC	0x0
2	**GPIO_QSPI_SCLK_EDGE_LOW**	WC	0x0
1	**GPIO_QSPI_SCLK_LEVEL_HIGH**	RO	0x0
0	**GPIO_QSPI_SCLK_LEVEL_LOW**	RO	0x0

IO_QSPI: PROC0_INTE Register

Offset: 0x34

Description

Interrupt Enable for proc0

Table 330. PROC0_INTE Register

Bits	Description	Type	Reset
31:24	Reserved.	-	-
23	**GPIO_QSPI_SD3_EDGE_HIGH**	RW	0x0
22	**GPIO_QSPI_SD3_EDGE_LOW**	RW	0x0
21	**GPIO_QSPI_SD3_LEVEL_HIGH**	RW	0x0
20	**GPIO_QSPI_SD3_LEVEL_LOW**	RW	0x0
19	**GPIO_QSPI_SD2_EDGE_HIGH**	RW	0x0
18	**GPIO_QSPI_SD2_EDGE_LOW**	RW	0x0

Bits	Description	Type	Reset
17	**GPIO_QSPI_SD2_LEVEL_HIGH**	RW	0x0
16	**GPIO_QSPI_SD2_LEVEL_LOW**	RW	0x0
15	**GPIO_QSPI_SD1_EDGE_HIGH**	RW	0x0
14	**GPIO_QSPI_SD1_EDGE_LOW**	RW	0x0
13	**GPIO_QSPI_SD1_LEVEL_HIGH**	RW	0x0
12	**GPIO_QSPI_SD1_LEVEL_LOW**	RW	0x0
11	**GPIO_QSPI_SD0_EDGE_HIGH**	RW	0x0
10	**GPIO_QSPI_SD0_EDGE_LOW**	RW	0x0
9	**GPIO_QSPI_SD0_LEVEL_HIGH**	RW	0x0
8	**GPIO_QSPI_SD0_LEVEL_LOW**	RW	0x0
7	**GPIO_QSPI_SS_EDGE_HIGH**	RW	0x0
6	**GPIO_QSPI_SS_EDGE_LOW**	RW	0x0
5	**GPIO_QSPI_SS_LEVEL_HIGH**	RW	0x0
4	**GPIO_QSPI_SS_LEVEL_LOW**	RW	0x0
3	**GPIO_QSPI_SCLK_EDGE_HIGH**	RW	0x0
2	**GPIO_QSPI_SCLK_EDGE_LOW**	RW	0x0
1	**GPIO_QSPI_SCLK_LEVEL_HIGH**	RW	0x0
0	**GPIO_QSPI_SCLK_LEVEL_LOW**	RW	0x0

IO_QSPI: PROC0_INTF Register

Offset: 0x38

Description

Interrupt Force for proc0

Table 331. PROC0_INTF Register

Bits	Description	Type	Reset
31:24	Reserved.	-	-
23	**GPIO_QSPI_SD3_EDGE_HIGH**	RW	0x0
22	**GPIO_QSPI_SD3_EDGE_LOW**	RW	0x0
21	**GPIO_QSPI_SD3_LEVEL_HIGH**	RW	0x0
20	**GPIO_QSPI_SD3_LEVEL_LOW**	RW	0x0
19	**GPIO_QSPI_SD2_EDGE_HIGH**	RW	0x0
18	**GPIO_QSPI_SD2_EDGE_LOW**	RW	0x0
17	**GPIO_QSPI_SD2_LEVEL_HIGH**	RW	0x0
16	**GPIO_QSPI_SD2_LEVEL_LOW**	RW	0x0
15	**GPIO_QSPI_SD1_EDGE_HIGH**	RW	0x0
14	**GPIO_QSPI_SD1_EDGE_LOW**	RW	0x0
13	**GPIO_QSPI_SD1_LEVEL_HIGH**	RW	0x0

Bits	Description	Type	Reset
12	**GPIO_QSPI_SD1_LEVEL_LOW**	RW	0x0
11	**GPIO_QSPI_SD0_EDGE_HIGH**	RW	0x0
10	**GPIO_QSPI_SD0_EDGE_LOW**	RW	0x0
9	**GPIO_QSPI_SD0_LEVEL_HIGH**	RW	0x0
8	**GPIO_QSPI_SD0_LEVEL_LOW**	RW	0x0
7	**GPIO_QSPI_SS_EDGE_HIGH**	RW	0x0
6	**GPIO_QSPI_SS_EDGE_LOW**	RW	0x0
5	**GPIO_QSPI_SS_LEVEL_HIGH**	RW	0x0
4	**GPIO_QSPI_SS_LEVEL_LOW**	RW	0x0
3	**GPIO_QSPI_SCLK_EDGE_HIGH**	RW	0x0
2	**GPIO_QSPI_SCLK_EDGE_LOW**	RW	0x0
1	**GPIO_QSPI_SCLK_LEVEL_HIGH**	RW	0x0
0	**GPIO_QSPI_SCLK_LEVEL_LOW**	RW	0x0

IO_QSPI: PROC0_INTS Register

Offset: 0x3c

Description

Interrupt status after masking & forcing for proc0

Table 332. PROC0_INTS Register

Bits	Description	Type	Reset
31:24	Reserved.	-	-
23	**GPIO_QSPI_SD3_EDGE_HIGH**	RO	0x0
22	**GPIO_QSPI_SD3_EDGE_LOW**	RO	0x0
21	**GPIO_QSPI_SD3_LEVEL_HIGH**	RO	0x0
20	**GPIO_QSPI_SD3_LEVEL_LOW**	RO	0x0
19	**GPIO_QSPI_SD2_EDGE_HIGH**	RO	0x0
18	**GPIO_QSPI_SD2_EDGE_LOW**	RO	0x0
17	**GPIO_QSPI_SD2_LEVEL_HIGH**	RO	0x0
16	**GPIO_QSPI_SD2_LEVEL_LOW**	RO	0x0
15	**GPIO_QSPI_SD1_EDGE_HIGH**	RO	0x0
14	**GPIO_QSPI_SD1_EDGE_LOW**	RO	0x0
13	**GPIO_QSPI_SD1_LEVEL_HIGH**	RO	0x0
12	**GPIO_QSPI_SD1_LEVEL_LOW**	RO	0x0
11	**GPIO_QSPI_SD0_EDGE_HIGH**	RO	0x0
10	**GPIO_QSPI_SD0_EDGE_LOW**	RO	0x0
9	**GPIO_QSPI_SD0_LEVEL_HIGH**	RO	0x0
8	**GPIO_QSPI_SD0_LEVEL_LOW**	RO	0x0

Bits	Description	Type	Reset
7	**GPIO_QSPI_SS_EDGE_HIGH**	RO	0x0
6	**GPIO_QSPI_SS_EDGE_LOW**	RO	0x0
5	**GPIO_QSPI_SS_LEVEL_HIGH**	RO	0x0
4	**GPIO_QSPI_SS_LEVEL_LOW**	RO	0x0
3	**GPIO_QSPI_SCLK_EDGE_HIGH**	RO	0x0
2	**GPIO_QSPI_SCLK_EDGE_LOW**	RO	0x0
1	**GPIO_QSPI_SCLK_LEVEL_HIGH**	RO	0x0
0	**GPIO_QSPI_SCLK_LEVEL_LOW**	RO	0x0

IO_QSPI: PROC1_INTE Register

Offset: 0x40

Description

Interrupt Enable for proc1

Table 333. PROC1_INTE Register

Bits	Description	Type	Reset
31:24	Reserved.	-	-
23	**GPIO_QSPI_SD3_EDGE_HIGH**	RW	0x0
22	**GPIO_QSPI_SD3_EDGE_LOW**	RW	0x0
21	**GPIO_QSPI_SD3_LEVEL_HIGH**	RW	0x0
20	**GPIO_QSPI_SD3_LEVEL_LOW**	RW	0x0
19	**GPIO_QSPI_SD2_EDGE_HIGH**	RW	0x0
18	**GPIO_QSPI_SD2_EDGE_LOW**	RW	0x0
17	**GPIO_QSPI_SD2_LEVEL_HIGH**	RW	0x0
16	**GPIO_QSPI_SD2_LEVEL_LOW**	RW	0x0
15	**GPIO_QSPI_SD1_EDGE_HIGH**	RW	0x0
14	**GPIO_QSPI_SD1_EDGE_LOW**	RW	0x0
13	**GPIO_QSPI_SD1_LEVEL_HIGH**	RW	0x0
12	**GPIO_QSPI_SD1_LEVEL_LOW**	RW	0x0
11	**GPIO_QSPI_SD0_EDGE_HIGH**	RW	0x0
10	**GPIO_QSPI_SD0_EDGE_LOW**	RW	0x0
9	**GPIO_QSPI_SD0_LEVEL_HIGH**	RW	0x0
8	**GPIO_QSPI_SD0_LEVEL_LOW**	RW	0x0
7	**GPIO_QSPI_SS_EDGE_HIGH**	RW	0x0
6	**GPIO_QSPI_SS_EDGE_LOW**	RW	0x0
5	**GPIO_QSPI_SS_LEVEL_HIGH**	RW	0x0
4	**GPIO_QSPI_SS_LEVEL_LOW**	RW	0x0
3	**GPIO_QSPI_SCLK_EDGE_HIGH**	RW	0x0

Bits	Description	Type	Reset
2	**GPIO_QSPI_SCLK_EDGE_LOW**	RW	0x0
1	**GPIO_QSPI_SCLK_LEVEL_HIGH**	RW	0x0
0	**GPIO_QSPI_SCLK_LEVEL_LOW**	RW	0x0

IO_QSPI: PROC1_INTF Register

Offset: 0x44

Description

Interrupt Force for proc1

Table 334. PROC1_INTF Register

Bits	Description	Type	Reset
31:24	Reserved.	-	-
23	**GPIO_QSPI_SD3_EDGE_HIGH**	RW	0x0
22	**GPIO_QSPI_SD3_EDGE_LOW**	RW	0x0
21	**GPIO_QSPI_SD3_LEVEL_HIGH**	RW	0x0
20	**GPIO_QSPI_SD3_LEVEL_LOW**	RW	0x0
19	**GPIO_QSPI_SD2_EDGE_HIGH**	RW	0x0
18	**GPIO_QSPI_SD2_EDGE_LOW**	RW	0x0
17	**GPIO_QSPI_SD2_LEVEL_HIGH**	RW	0x0
16	**GPIO_QSPI_SD2_LEVEL_LOW**	RW	0x0
15	**GPIO_QSPI_SD1_EDGE_HIGH**	RW	0x0
14	**GPIO_QSPI_SD1_EDGE_LOW**	RW	0x0
13	**GPIO_QSPI_SD1_LEVEL_HIGH**	RW	0x0
12	**GPIO_QSPI_SD1_LEVEL_LOW**	RW	0x0
11	**GPIO_QSPI_SD0_EDGE_HIGH**	RW	0x0
10	**GPIO_QSPI_SD0_EDGE_LOW**	RW	0x0
9	**GPIO_QSPI_SD0_LEVEL_HIGH**	RW	0x0
8	**GPIO_QSPI_SD0_LEVEL_LOW**	RW	0x0
7	**GPIO_QSPI_SS_EDGE_HIGH**	RW	0x0
6	**GPIO_QSPI_SS_EDGE_LOW**	RW	0x0
5	**GPIO_QSPI_SS_LEVEL_HIGH**	RW	0x0
4	**GPIO_QSPI_SS_LEVEL_LOW**	RW	0x0
3	**GPIO_QSPI_SCLK_EDGE_HIGH**	RW	0x0
2	**GPIO_QSPI_SCLK_EDGE_LOW**	RW	0x0
1	**GPIO_QSPI_SCLK_LEVEL_HIGH**	RW	0x0
0	**GPIO_QSPI_SCLK_LEVEL_LOW**	RW	0x0

IO_QSPI: PROC1_INTS Register

Offset: 0x48

Description

Interrupt status after masking & forcing for proc1

Table 335. PROC1_INTS Register

Bits	Description	Type	Reset
31:24	Reserved.	-	-
23	**GPIO_QSPI_SD3_EDGE_HIGH**	RO	0x0
22	**GPIO_QSPI_SD3_EDGE_LOW**	RO	0x0
21	**GPIO_QSPI_SD3_LEVEL_HIGH**	RO	0x0
20	**GPIO_QSPI_SD3_LEVEL_LOW**	RO	0x0
19	**GPIO_QSPI_SD2_EDGE_HIGH**	RO	0x0
18	**GPIO_QSPI_SD2_EDGE_LOW**	RO	0x0
17	**GPIO_QSPI_SD2_LEVEL_HIGH**	RO	0x0
16	**GPIO_QSPI_SD2_LEVEL_LOW**	RO	0x0
15	**GPIO_QSPI_SD1_EDGE_HIGH**	RO	0x0
14	**GPIO_QSPI_SD1_EDGE_LOW**	RO	0x0
13	**GPIO_QSPI_SD1_LEVEL_HIGH**	RO	0x0
12	**GPIO_QSPI_SD1_LEVEL_LOW**	RO	0x0
11	**GPIO_QSPI_SD0_EDGE_HIGH**	RO	0x0
10	**GPIO_QSPI_SD0_EDGE_LOW**	RO	0x0
9	**GPIO_QSPI_SD0_LEVEL_HIGH**	RO	0x0
8	**GPIO_QSPI_SD0_LEVEL_LOW**	RO	0x0
7	**GPIO_QSPI_SS_EDGE_HIGH**	RO	0x0
6	**GPIO_QSPI_SS_EDGE_LOW**	RO	0x0
5	**GPIO_QSPI_SS_LEVEL_HIGH**	RO	0x0
4	**GPIO_QSPI_SS_LEVEL_LOW**	RO	0x0
3	**GPIO_QSPI_SCLK_EDGE_HIGH**	RO	0x0
2	**GPIO_QSPI_SCLK_EDGE_LOW**	RO	0x0
1	**GPIO_QSPI_SCLK_LEVEL_HIGH**	RO	0x0
0	**GPIO_QSPI_SCLK_LEVEL_LOW**	RO	0x0

IO_QSPI: DORMANT_WAKE_INTE Register

Offset: 0x4c

Description

Interrupt Enable for dormant_wake

Table 336. DORMANT_WAKE_INTE Register

Bits	Description	Type	Reset
31:24	Reserved.	-	-
23	**GPIO_QSPI_SD3_EDGE_HIGH**	RW	0x0
22	**GPIO_QSPI_SD3_EDGE_LOW**	RW	0x0

Bits	Description	Type	Reset
21	**GPIO_QSPI_SD3_LEVEL_HIGH**	RW	0x0
20	**GPIO_QSPI_SD3_LEVEL_LOW**	RW	0x0
19	**GPIO_QSPI_SD2_EDGE_HIGH**	RW	0x0
18	**GPIO_QSPI_SD2_EDGE_LOW**	RW	0x0
17	**GPIO_QSPI_SD2_LEVEL_HIGH**	RW	0x0
16	**GPIO_QSPI_SD2_LEVEL_LOW**	RW	0x0
15	**GPIO_QSPI_SD1_EDGE_HIGH**	RW	0x0
14	**GPIO_QSPI_SD1_EDGE_LOW**	RW	0x0
13	**GPIO_QSPI_SD1_LEVEL_HIGH**	RW	0x0
12	**GPIO_QSPI_SD1_LEVEL_LOW**	RW	0x0
11	**GPIO_QSPI_SD0_EDGE_HIGH**	RW	0x0
10	**GPIO_QSPI_SD0_EDGE_LOW**	RW	0x0
9	**GPIO_QSPI_SD0_LEVEL_HIGH**	RW	0x0
8	**GPIO_QSPI_SD0_LEVEL_LOW**	RW	0x0
7	**GPIO_QSPI_SS_EDGE_HIGH**	RW	0x0
6	**GPIO_QSPI_SS_EDGE_LOW**	RW	0x0
5	**GPIO_QSPI_SS_LEVEL_HIGH**	RW	0x0
4	**GPIO_QSPI_SS_LEVEL_LOW**	RW	0x0
3	**GPIO_QSPI_SCLK_EDGE_HIGH**	RW	0x0
2	**GPIO_QSPI_SCLK_EDGE_LOW**	RW	0x0
1	**GPIO_QSPI_SCLK_LEVEL_HIGH**	RW	0x0
0	**GPIO_QSPI_SCLK_LEVEL_LOW**	RW	0x0

IO_QSPI: DORMANT_WAKE_INTF Register

Offset: 0x50

Description

Interrupt Force for dormant_wake

Table 337. DORMANT_WAKE_INTF Register

Bits	Description	Type	Reset
31:24	Reserved.	-	-
23	**GPIO_QSPI_SD3_EDGE_HIGH**	RW	0x0
22	**GPIO_QSPI_SD3_EDGE_LOW**	RW	0x0
21	**GPIO_QSPI_SD3_LEVEL_HIGH**	RW	0x0
20	**GPIO_QSPI_SD3_LEVEL_LOW**	RW	0x0
19	**GPIO_QSPI_SD2_EDGE_HIGH**	RW	0x0
18	**GPIO_QSPI_SD2_EDGE_LOW**	RW	0x0
17	**GPIO_QSPI_SD2_LEVEL_HIGH**	RW	0x0

Bits	Description	Type	Reset
16	**GPIO_QSPI_SD2_LEVEL_LOW**	RW	0x0
15	**GPIO_QSPI_SD1_EDGE_HIGH**	RW	0x0
14	**GPIO_QSPI_SD1_EDGE_LOW**	RW	0x0
13	**GPIO_QSPI_SD1_LEVEL_HIGH**	RW	0x0
12	**GPIO_QSPI_SD1_LEVEL_LOW**	RW	0x0
11	**GPIO_QSPI_SD0_EDGE_HIGH**	RW	0x0
10	**GPIO_QSPI_SD0_EDGE_LOW**	RW	0x0
9	**GPIO_QSPI_SD0_LEVEL_HIGH**	RW	0x0
8	**GPIO_QSPI_SD0_LEVEL_LOW**	RW	0x0
7	**GPIO_QSPI_SS_EDGE_HIGH**	RW	0x0
6	**GPIO_QSPI_SS_EDGE_LOW**	RW	0x0
5	**GPIO_QSPI_SS_LEVEL_HIGH**	RW	0x0
4	**GPIO_QSPI_SS_LEVEL_LOW**	RW	0x0
3	**GPIO_QSPI_SCLK_EDGE_HIGH**	RW	0x0
2	**GPIO_QSPI_SCLK_EDGE_LOW**	RW	0x0
1	**GPIO_QSPI_SCLK_LEVEL_HIGH**	RW	0x0
0	**GPIO_QSPI_SCLK_LEVEL_LOW**	RW	0x0

IO_QSPI: DORMANT_WAKE_INTS Register

Offset: 0x54

Description

Interrupt status after masking & forcing for dormant_wake

Table 338. DORMANT_WAKE_INTS Register

Bits	Description	Type	Reset
31:24	Reserved.	-	-
23	**GPIO_QSPI_SD3_EDGE_HIGH**	RO	0x0
22	**GPIO_QSPI_SD3_EDGE_LOW**	RO	0x0
21	**GPIO_QSPI_SD3_LEVEL_HIGH**	RO	0x0
20	**GPIO_QSPI_SD3_LEVEL_LOW**	RO	0x0
19	**GPIO_QSPI_SD2_EDGE_HIGH**	RO	0x0
18	**GPIO_QSPI_SD2_EDGE_LOW**	RO	0x0
17	**GPIO_QSPI_SD2_LEVEL_HIGH**	RO	0x0
16	**GPIO_QSPI_SD2_LEVEL_LOW**	RO	0x0
15	**GPIO_QSPI_SD1_EDGE_HIGH**	RO	0x0
14	**GPIO_QSPI_SD1_EDGE_LOW**	RO	0x0
13	**GPIO_QSPI_SD1_LEVEL_HIGH**	RO	0x0
12	**GPIO_QSPI_SD1_LEVEL_LOW**	RO	0x0

Bits	Description	Type	Reset
11	**GPIO_QSPI_SD0_EDGE_HIGH**	RO	0x0
10	**GPIO_QSPI_SD0_EDGE_LOW**	RO	0x0
9	**GPIO_QSPI_SD0_LEVEL_HIGH**	RO	0x0
8	**GPIO_QSPI_SD0_LEVEL_LOW**	RO	0x0
7	**GPIO_QSPI_SS_EDGE_HIGH**	RO	0x0
6	**GPIO_QSPI_SS_EDGE_LOW**	RO	0x0
5	**GPIO_QSPI_SS_LEVEL_HIGH**	RO	0x0
4	**GPIO_QSPI_SS_LEVEL_LOW**	RO	0x0
3	**GPIO_QSPI_SCLK_EDGE_HIGH**	RO	0x0
2	**GPIO_QSPI_SCLK_EDGE_LOW**	RO	0x0
1	**GPIO_QSPI_SCLK_LEVEL_HIGH**	RO	0x0
0	**GPIO_QSPI_SCLK_LEVEL_LOW**	RO	0x0

2.19.6.3. Pad Control - User Bank

The User Bank Pad Control registers start at a base address of `0x4001c000` (defined as PADS_BANK0_BASE in SDK).

Table 339. List of PADS_BANK0 registers

Offset	Name	Info
0x00	VOLTAGE_SELECT	Voltage select. Per bank control
0x04	GPIO0	Pad control register
0x08	GPIO1	Pad control register
0x0c	GPIO2	Pad control register
0x10	GPIO3	Pad control register
0x14	GPIO4	Pad control register
0x18	GPIO5	Pad control register
0x1c	GPIO6	Pad control register
0x20	GPIO7	Pad control register
0x24	GPIO8	Pad control register
0x28	GPIO9	Pad control register
0x2c	GPIO10	Pad control register
0x30	GPIO11	Pad control register
0x34	GPIO12	Pad control register
0x38	GPIO13	Pad control register
0x3c	GPIO14	Pad control register
0x40	GPIO15	Pad control register
0x44	GPIO16	Pad control register
0x48	GPIO17	Pad control register

Offset	Name	Info
0x4c	GPIO18	Pad control register
0x50	GPIO19	Pad control register
0x54	GPIO20	Pad control register
0x58	GPIO21	Pad control register
0x5c	GPIO22	Pad control register
0x60	GPIO23	Pad control register
0x64	GPIO24	Pad control register
0x68	GPIO25	Pad control register
0x6c	GPIO26	Pad control register
0x70	GPIO27	Pad control register
0x74	GPIO28	Pad control register
0x78	GPIO29	Pad control register
0x7c	SWCLK	Pad control register
0x80	SWD	Pad control register

PADS_BANK0: VOLTAGE_SELECT Register

Offset: 0x00

Table 340. VOLTAGE_SELECT Register

Bits	Description	Type	Reset
31:1	Reserved.	-	-
0	Voltage select. Per bank control	RW	0x0
	Enumerated values:		
	0x0 → 3V3: Set voltage to 3.3V (DVDD >= 2V5)		
	0x1 → 1V8: Set voltage to 1.8V (DVDD ⇐ 1V8)		

PADS_BANK0: GPIO0, GPIO1, ..., GPIO28, GPIO29 Registers

Offsets: 0x04, 0x08, ..., 0x74, 0x78

Description

Pad control register

Table 341. GPIO0, GPIO1, ..., GPIO28, GPIO29 Registers

Bits	Description	Type	Reset
31:8	Reserved.	-	-
7	**OD**: Output disable. Has priority over output enable from peripherals	RW	0x0
6	**IE**: Input enable	RW	0x1
5:4	**DRIVE**: Drive strength.	RW	0x1
	Enumerated values:		
	0x0 → 2MA		
	0x1 → 4MA		

Bits	Description	Type	Reset
	0x2 → 8MA		
	0x3 → 12MA		
3	**PUE**: Pull up enable	RW	0x0
2	**PDE**: Pull down enable	RW	0x1
1	**SCHMITT**: Enable schmitt trigger	RW	0x1
0	**SLEWFAST**: Slew rate control. 1 = Fast, 0 = Slow	RW	0x0

PADS_BANK0: SWCLK Register

Offset: 0x7c

Description

Pad control register

Table 342. SWCLK Register

Bits	Description	Type	Reset
31:8	Reserved.	-	-
7	**OD**: Output disable. Has priority over output enable from peripherals	RW	0x1
6	**IE**: Input enable	RW	0x1
5:4	**DRIVE**: Drive strength.	RW	0x1
	Enumerated values:		
	0x0 → 2MA		
	0x1 → 4MA		
	0x2 → 8MA		
	0x3 → 12MA		
3	**PUE**: Pull up enable	RW	0x1
2	**PDE**: Pull down enable	RW	0x0
1	**SCHMITT**: Enable schmitt trigger	RW	0x1
0	**SLEWFAST**: Slew rate control. 1 = Fast, 0 = Slow	RW	0x0

PADS_BANK0: SWD Register

Offset: 0x80

Description

Pad control register

Table 343. SWD Register

Bits	Description	Type	Reset
31:8	Reserved.	-	-
7	**OD**: Output disable. Has priority over output enable from peripherals	RW	0x0
6	**IE**: Input enable	RW	0x1
5:4	**DRIVE**: Drive strength.	RW	0x1
	Enumerated values:		
	0x0 → 2MA		

Bits	Description	Type	Reset
	0x1 → 4MA		
	0x2 → 8MA		
	0x3 → 12MA		
3	**PUE**: Pull up enable	RW	0x1
2	**PDE**: Pull down enable	RW	0x0
1	**SCHMITT**: Enable schmitt trigger	RW	0x1
0	**SLEWFAST**: Slew rate control. 1 = Fast, 0 = Slow	RW	0x0

2.19.6.4. Pad Control - QSPI Bank

The QSPI Bank Pad Control registers start at a base address of `0x40020000` (defined as PADS_QSPI_BASE in SDK).

Table 344. List of PADS_QSPI registers

Offset	Name	Info
0x00	VOLTAGE_SELECT	Voltage select. Per bank control
0x04	GPIO_QSPI_SCLK	Pad control register
0x08	GPIO_QSPI_SD0	Pad control register
0x0c	GPIO_QSPI_SD1	Pad control register
0x10	GPIO_QSPI_SD2	Pad control register
0x14	GPIO_QSPI_SD3	Pad control register
0x18	GPIO_QSPI_SS	Pad control register

PADS_QSPI: VOLTAGE_SELECT Register

Offset: 0x00

Table 345. VOLTAGE_SELECT Register

Bits	Description	Type	Reset
31:1	Reserved.	-	-
0	Voltage select. Per bank control	RW	0x0
	Enumerated values:		
	0x0 → 3V3: Set voltage to 3.3V (DVDD >= 2V5)		
	0x1 → 1V8: Set voltage to 1.8V (DVDD ⇐ 1V8)		

PADS_QSPI: GPIO_QSPI_SCLK Register

Offset: 0x04

Description

Pad control register

Table 346. GPIO_QSPI_SCLK Register

Bits	Description	Type	Reset
31:8	Reserved.	-	-
7	**OD**: Output disable. Has priority over output enable from peripherals	RW	0x0
6	**IE**: Input enable	RW	0x1

Bits	Description	Type	Reset
5:4	**DRIVE**: Drive strength.	RW	0x1
	Enumerated values:		
	0x0 → 2MA		
	0x1 → 4MA		
	0x2 → 8MA		
	0x3 → 12MA		
3	**PUE**: Pull up enable	RW	0x0
2	**PDE**: Pull down enable	RW	0x1
1	**SCHMITT**: Enable schmitt trigger	RW	0x1
0	**SLEWFAST**: Slew rate control. 1 = Fast, 0 = Slow	RW	0x0

PADS_QSPI: GPIO_QSPI_SD0, GPIO_QSPI_SD1, GPIO_QSPI_SD2, GPIO_QSPI_SD3 Registers

Offsets: 0x08, 0x0c, 0x10, 0x14

Description

Pad control register

Table 347. GPIO_QSPI_SD0, GPIO_QSPI_SD1, GPIO_QSPI_SD2, GPIO_QSPI_SD3 Registers

Bits	Description	Type	Reset
31:8	Reserved.	-	-
7	**OD**: Output disable. Has priority over output enable from peripherals	RW	0x0
6	**IE**: Input enable	RW	0x1
5:4	**DRIVE**: Drive strength.	RW	0x1
	Enumerated values:		
	0x0 → 2MA		
	0x1 → 4MA		
	0x2 → 8MA		
	0x3 → 12MA		
3	**PUE**: Pull up enable	RW	0x0
2	**PDE**: Pull down enable	RW	0x0
1	**SCHMITT**: Enable schmitt trigger	RW	0x1
0	**SLEWFAST**: Slew rate control. 1 = Fast, 0 = Slow	RW	0x0

PADS_QSPI: GPIO_QSPI_SS Register

Offset: 0x18

Description

Pad control register

Table 348. GPIO_QSPI_SS Register

Bits	Description	Type	Reset
31:8	Reserved.	-	-
7	**OD**: Output disable. Has priority over output enable from peripherals	RW	0x0
6	**IE**: Input enable	RW	0x1
5:4	**DRIVE**: Drive strength.	RW	0x1
	Enumerated values:		
	0x0 → 2MA		
	0x1 → 4MA		
	0x2 → 8MA		
	0x3 → 12MA		
3	**PUE**: Pull up enable	RW	0x1
2	**PDE**: Pull down enable	RW	0x0
1	**SCHMITT**: Enable schmitt trigger	RW	0x1
0	**SLEWFAST**: Slew rate control. 1 = Fast, 0 = Slow	RW	0x0

2.20. Sysinfo

2.20.1. Overview

The sysinfo block contains system information. The first register contains the Chip ID, which allows the programmer to know which version of the chip software is running on. The second register will always read as 1 on the device.

2.20.2. List of Registers

The sysinfo registers start at a base address of `0x40000000` (defined as SYSINFO_BASE in SDK).

Table 349. List of SYSINFO registers

Offset	Name	Info
0x00	CHIP_ID	JEDEC JEP-106 compliant chip identifier.
0x04	PLATFORM	Platform register. Allows software to know what environment it is running in.
0x40	GITREF_RP2040	Git hash of the chip source. Used to identify chip version.

SYSINFO: CHIP_ID Register

Offset: 0x00

Description

JEDEC JEP-106 compliant chip identifier.

Table 350. CHIP_ID Register

Bits	Description	Type	Reset
31:28	**REVISION**	RO	-
27:12	**PART**	RO	-

Bits	Description	Type	Reset
11:0	**MANUFACTURER**	RO	-

SYSINFO: PLATFORM Register

Offset: 0x04

Description

Platform register. Allows software to know what environment it is running in.

Table 351. PLATFORM Register

Bits	Description	Type	Reset
31:2	Reserved.	-	-
1	**ASIC**	RO	0x0
0	**FPGA**	RO	0x0

SYSINFO: GITREF_RP2040 Register

Offset: 0x40

Table 352. GITREF_RP2040 Register

Bits	Description	Type	Reset
31:0	Git hash of the chip source. Used to identify chip version.	RO	-

2.21. Syscfg

2.21.1. Overview

The system config block controls miscellaneous chip settings including:

- NMI (Non-Maskable-Interrupt) mask to pick sources that generate the NMI
- Processor config
  - DAP Instance ID (to change the address that the SWD uses to communicate with the core in debug)
  - Processor status (If the processor is halted, which may be useful in debug)
- Processor IO config
  - Input synchroniser control (to allow input synchronisers to be bypassed to reduce latency where clocks are synchronous)
- Debug control
  - Provides the ability to control the SWD interface from inside the chip. This means Core 0 could debug Core 1, which may make debug connectivity easier.
- Memory power down (each memory can be powered down if not being used to save a small amount of extra power).

2.21.2. List of Registers

The system config registers start at a base address of `0x40004000` (defined as SYSCFG_BASE in SDK).

Table 353. List of SYSCFG registers

Offset	Name	Info
0x00	PROC0_NMI_MASK	Processor core 0 NMI source mask
0x04	PROC1_NMI_MASK	Processor core 1 NMI source mask
0x08	PROC_CONFIG	Configuration for processors
0x0c	PROC_IN_SYNC_BYPASS	For each bit, if 1, bypass the input synchronizer between that GPIO and the GPIO input register in the SIO. The input synchronizers should generally be unbypassed, to avoid injecting metastabilities into processors. If you're feeling brave, you can bypass to save two cycles of input latency. This register applies to GPIO 0…29.
0x10	PROC_IN_SYNC_BYPASS_HI	For each bit, if 1, bypass the input synchronizer between that GPIO and the GPIO input register in the SIO. The input synchronizers should generally be unbypassed, to avoid injecting metastabilities into processors. If you're feeling brave, you can bypass to save two cycles of input latency. This register applies to GPIO 30…35 (the QSPI IOs).
0x14	DBGFORCE	Directly control the SWD debug port of either processor
0x18	MEMPOWERDOWN	Control power downs to memories. Set high to power down memories. Use with extreme caution

SYSCFG: PROC0_NMI_MASK Register

Offset: 0x00

Description

Processor core 0 NMI source mask

Table 354. PROC0_NMI_MASK Register

Bits	Description	Type	Reset
31:0	Set a bit high to enable NMI from that IRQ	RW	0x00000000

SYSCFG: PROC1_NMI_MASK Register

Offset: 0x04

Description

Processor core 1 NMI source mask

Table 355. PROC1_NMI_MASK Register

Bits	Description	Type	Reset
31:0	Set a bit high to enable NMI from that IRQ	RW	0x00000000

SYSCFG: PROC_CONFIG Register

Offset: 0x08

Description

Configuration for processors

Table 356. PROC_CONFIG Register

Bits	Description	Type	Reset
31:28	**PROC1_DAP_INSTID**: Configure proc1 DAP instance ID. Recommend that this is NOT changed until you require debug access in multi-chip environment WARNING: do not set to 15 as this is reserved for RescueDP	RW	0x1
27:24	**PROC0_DAP_INSTID**: Configure proc0 DAP instance ID. Recommend that this is NOT changed until you require debug access in multi-chip environment WARNING: do not set to 15 as this is reserved for RescueDP	RW	0x0
23:2	Reserved.	-	-
1	**PROC1_HALTED**: Indication that proc1 has halted	RO	0x0
0	**PROC0_HALTED**: Indication that proc0 has halted	RO	0x0

SYSCFG: PROC_IN_SYNC_BYPASS Register

Offset: 0x0c

Table 357. PROC_IN_SYNC_BYPASS Register

Bits	Description	Type	Reset
31:30	Reserved.	-	-
29:0	For each bit, if 1, bypass the input synchronizer between that GPIO and the GPIO input register in the SIO. The input synchronizers should generally be unbypassed, to avoid injecting metastabilities into processors. If you're feeling brave, you can bypass to save two cycles of input latency. This register applies to GPIO 0…29.	RW	0x00000000

SYSCFG: PROC_IN_SYNC_BYPASS_HI Register

Offset: 0x10

Table 358. PROC_IN_SYNC_BYPASS_HI Register

Bits	Description	Type	Reset
31:6	Reserved.	-	-
5:0	For each bit, if 1, bypass the input synchronizer between that GPIO and the GPIO input register in the SIO. The input synchronizers should generally be unbypassed, to avoid injecting metastabilities into processors. If you're feeling brave, you can bypass to save two cycles of input latency. This register applies to GPIO 30…35 (the QSPI IOs).	RW	0x00

SYSCFG: DBGFORCE Register

Offset: 0x14

Description

Directly control the SWD debug port of either processor

Table 359. DBGFORCE Register

Bits	Description	Type	Reset
31:8	Reserved.	-	-
7	**PROC1_ATTACH**: Attach processor 1 debug port to syscfg controls, and disconnect it from external SWD pads.	RW	0x0
6	**PROC1_SWCLK**: Directly drive processor 1 SWCLK, if PROC1_ATTACH is set	RW	0x1

Bits	Description	Type	Reset
5	**PROC1_SWDI**: Directly drive processor 1 SWDIO input, if PROC1_ATTACH is set	RW	0x1
4	**PROC1_SWDO**: Observe the value of processor 1 SWDIO output.	RO	-
3	**PROC0_ATTACH**: Attach processor 0 debug port to syscfg controls, and disconnect it from external SWD pads.	RW	0x0
2	**PROC0_SWCLK**: Directly drive processor 0 SWCLK, if PROC0_ATTACH is set	RW	0x1
1	**PROC0_SWDI**: Directly drive processor 0 SWDIO input, if PROC0_ATTACH is set	RW	0x1
0	**PROC0_SWDO**: Observe the value of processor 0 SWDIO output.	RO	-

SYSCFG: MEMPOWERDOWN Register

Offset: 0x18

Description

Control power downs to memories. Set high to power down memories.
Use with extreme caution

Table 360. MEMPOWERDOWN Register

Bits	Description	Type	Reset
31:8	Reserved.	-	-
7	**ROM**	RW	0x0
6	**USB**	RW	0x0
5	**SRAM5**	RW	0x0
4	**SRAM4**	RW	0x0
3	**SRAM3**	RW	0x0
2	**SRAM2**	RW	0x0
1	**SRAM1**	RW	0x0
0	**SRAM0**	RW	0x0

2.22. TBMAN

TBMAN refers to the testbench manager, which is used during chip development simulations to verify the design. During these simulations TBMAN allows software running on RP2040 to control the testbench and simulation environment. On the real chip it has no effect other than providing a single `PLATFORM` register to indicate that this is the real chip. This `PLATFORM` functionality is duplicated in the sysinfo (Section 2.20) registers.

2.22.1. List of Registers

The TBMAN registers start at a base address of `0x4006c000` (defined as TBMAN_BASE in SDK).

Table 361. List of TBMAN registers

Offset	Name	Info
0x0	PLATFORM	Indicates the type of platform in use

TBMAN: PLATFORM Register

Offset: 0x0

Description

Indicates the type of platform in use

Table 362. PLATFORM Register

Bits	Description	Type	Reset
31:2	Reserved.	-	-
1	**FPGA**: Indicates the platform is an FPGA	RO	0x0
0	**ASIC**: Indicates the platform is an ASIC	RO	0x1

Chapter 3. PIO

3.1. Overview

There are 2 identical PIO blocks in RP2040. Each PIO block has dedicated connections to the bus fabric, GPIO and interrupt controller. The diagram for a single PIO block is show in Figure 38.

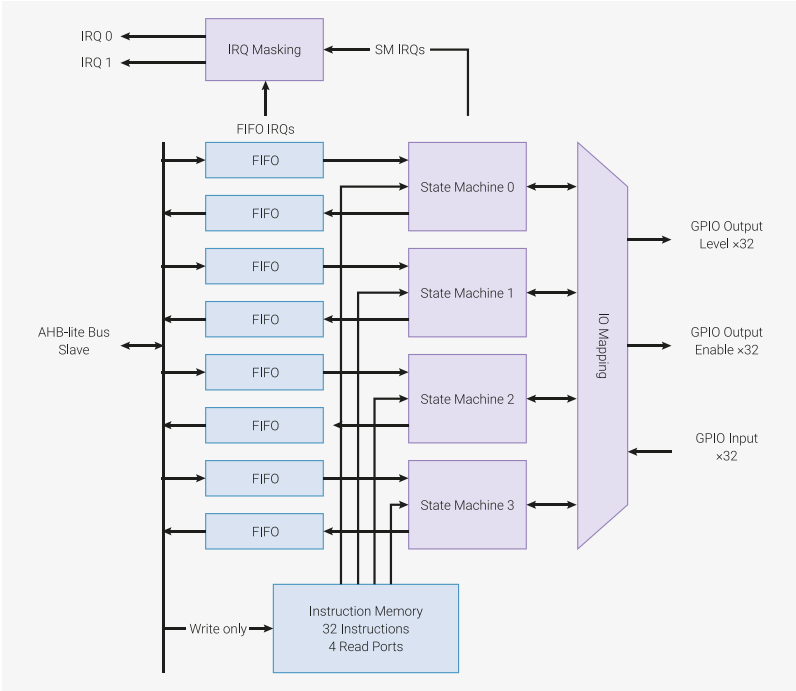

Figure 38. PIO block-level diagram. There are two PIO blocks with four state machines each. The four state machines simultaneously execute programs from a shared instruction memory. FIFO data queues buffer data transferred between PIO and the system. GPIO mapping logic allows each state machine to observe and manipulate up to 30 GPIOs.

The programmable input/output block (PIO) is a versatile hardware interface. It can support a variety of IO standards, including:

- 8080 and 6800 parallel bus
- I2C
- 3-pin I2S
- SDIO
- SPI, DSPI, QSPI
- UART
- DPI or VGA (via resistor DAC)

PIO is programmable in the same sense as a processor. There are two PIO blocks with four state machines each, that can independently execute sequential programs to manipulate GPIOs and transfer data. Unlike a general purpose processor, PIO state machines are highly specialised for IO, with a focus on determinism, precise timing, and close integration with fixed-function hardware. Each state machine is equipped with:

- Two 32-bit shift registers – either direction, any shift count
- Two 32-bit scratch registers
- 4×32-bit bus FIFO in each direction (TX/RX), reconfigurable as 8×32 in a single direction
- Fractional clock divider (16 integer, 8 fractional bits)

- Flexible GPIO mapping
- DMA interface, sustained throughput up to 1 word per clock from system DMA
- IRQ flag set/clear/status

Each state machine, along with its supporting hardware, occupies approximately the same silicon area as a standard serial interface block, such as an SPI or I2C controller. However, PIO state machines can be configured and reconfigured dynamically to implement numerous different interfaces.

Making state machines programmable in a software-like manner, rather than a fully configurable logic fabric like a CPLD, allows more hardware interfaces to be offered in the same cost and power envelope. This also presents a more familiar programming model, and simpler tool flow, to those who wish to exploit PIO's full flexibility by programming it directly, rather than using a premade interface from the PIO library.

PIO is highly performant as well as flexible, thanks to a carefully selected set of fixed-function hardware inside each state machine. When outputting DPI, PIO can sustain 360Mbps during the active scanline period when running from a 48MHz system clock. In this example, one state machine is handling frame/scanline timing and generating the pixel clock, while another is handling the pixel data, and unpacking run-length-encoded scanlines.

State machines' inputs and outputs are mapped to up to 32 GPIOs (limited to 30 GPIOs for RP2040), and all state machines have independent, simultaneous access to any GPIO. For example, the standard UART code allows TX, RX, CTS and RTS to be any four arbitrary GPIOs, and I2C permits the same for SDA and SCL. The amount of freedom available depends on how exactly a given PIO program chooses to use PIO's pin mapping resources, but at the minimum, an interface can be freely shifted up or down by some number of GPIOs.

3.2. Programmer's Model

The four state machines execute from a shared instruction memory. System software loads programs into this memory, configures the state machines and IO mapping, and then sets the state machines running. PIO programs come from various sources: assembled directly by the user, drawn from the PIO library, or generated programmatically by user software.

From this point on, state machines are generally autonomous, and system software interacts through DMA, interrupts and control registers, as with other peripherals on RP2040. For more complex interfaces, PIO provides a small but flexible set of primitives which allow system software to be more hands-on with state machine control flow.

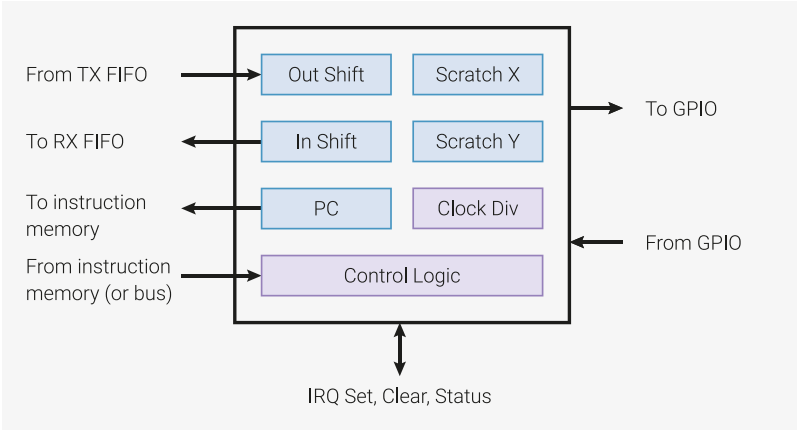

Figure 39. State machine overview. Data flows in and out through a pair of FIFOs. The state machine executes a program which transfers data between these FIFOs, a set of internal registers, and the pins. The clock divider can reduce the state machine's execution speed by a constant factor.

3.2.1. PIO Programs

PIO state machines execute short, binary programs.

Programs for common interfaces, such as UART, SPI, or I2C, are available in the PIO library, so in many cases, it is not necessary to write PIO programs. However, the PIO is much more flexible when programmed directly, supporting a wide

variety of interfaces which may not have been foreseen by its designers.

The PIO has a total of nine instructions: `JMP`, `WAIT`, `IN`, `OUT`, `PUSH`, `PULL`, `MOV`, `IRQ`, and `SET`. See Section 3.4 for details on these instructions.

Though the PIO only has a total of nine instructions, it would be difficult to edit PIO program binaries by hand. PIO assembly is a textual format, describing a PIO program, where each command corresponds to one instruction in the output binary. Below is an example program in PIO assembly:

Pico Examples: https://github.com/raspberrypi/pico-examples/blob/master/pio/squarewave/squarewave.pio Lines 8 - 13

```
 8 .program squarewave
 9     set pindirs, 1   ; Set pin to output
10 again:
11     set pins, 1 [1]  ; Drive pin high and then delay for one cycle
12     set pins, 0      ; Drive pin low
13     jmp again        ; Set PC to label `again`
```

The PIO assembler is included with the SDK, and is called `pioasm`. This program processes a PIO assembly input text file, which may contain multiple programs, and writes out the assembled programs ready for use. For the SDK these assembled programs are emitted in form of C headers, containing constant arrays: For more information see Section 3.3

3.2.2. Control Flow

On every system clock cycle, each state machine fetches, decodes and executes one instruction. Each instruction takes precisely one cycle, unless it explicitly stalls (such as the `WAIT` instruction). Instructions may also insert a delay of up to 31 cycles before the next instruction is executed to aid the writing of cycle-exact programs.

The program counter, or `PC`, points to the location in the instruction memory being executed on this cycle. Generally, `PC` increments by one each cycle, wrapping at the end of the instruction memory. Jump instructions are an exception and explicitly provide the next value that `PC` will take.

Our example assembly program (listed as `.program squarewave` above) shows both of these concepts in practice. It drives a 50/50 duty cycle square wave onto a GPIO, with a period of four cycles. Using some other features (e.g. side-set) this can be made as low as two cycles.

NOTE

Side-set is where a state machine drives a small number of GPIOs *in addition to* the main side effects of the instruction it executes. It's described fully in Section 3.5.1.

The system has write-only access to the instruction memory, which is used to load programs:

Pico Examples: https://github.com/raspberrypi/pico-examples/blob/master/pio/squarewave/squarewave.c Lines 34 - 38

```
34     // Load the assembled program directly into the PIO's instruction memory.
35     // Each PIO instance has a 32-slot instruction memory, which all 4 state
36     // machines can see. The system has write-only access.
37     for (uint i = 0; i < count_of(squarewave_program_instructions); ++i)
38         pio->instr_mem[i] = squarewave_program_instructions[i];
```

The clock divider slows the state machine's execution by a constant factor, represented as a 16.8 fixed-point fractional number. Using the above example, if a clock division of `2.5` were programmed, the square wave would have a period of $4 \times 2.5 = 10$ cycles. This is useful for setting a precise baud rate for a serial interface, such as a UART.

Pico Examples: https://github.com/raspberrypi/pico-examples/blob/master/pio/squarewave/squarewave.c Lines 42 - 47

```
42      // Configure state machine 0 to run at sysclk/2.5. The state machines can
43      // run as fast as one instruction per clock cycle, but we can scale their
44      // speed down uniformly to meet some precise frequency target, e.g. for a
45      // UART baud rate. This register has 16 integer divisor bits and 8
46      // fractional divisor bits.
47      pio->sm[0].clkdiv = (uint32_t) (2.5f * (1 << 16));
```

The above code fragments are part of a complete code example which drives a 12.5MHz square wave out of GPIO 0 (or any other pins we might choose to map). We can also use pins `WAIT PIN` instruction to stall a state machine's execution for some amount of time, or a `JMP PIN` instruction to branch on the state of a pin, so control flow can vary based on pin state.

Pico Examples: https://github.com/raspberrypi/pico-examples/blob/master/pio/squarewave/squarewave.c Lines 51 - 59

```
51      // There are five pin mapping groups (out, in, set, side-set, jmp pin)
52      // which are used by different instructions or in different circumstances.
53      // Here we're just using SET instructions. Configure state machine 0 SETs
54      // to affect GPIO 0 only; then configure GPIO0 to be controlled by PIO0,
55      // as opposed to e.g. the processors.
56      pio->sm[0].pinctrl =
57              (1 << PIO_SM0_PINCTRL_SET_COUNT_LSB) |
58              (0 << PIO_SM0_PINCTRL_SET_BASE_LSB);
59      gpio_set_function(0, pio_get_funcsel(pio));
```

The system can start and stop each state machine at any time, via the CTRL register. Multiple state machines can be started simultaneously, and the deterministic nature of PIO means they can stay perfectly synchronised.

Pico Examples: https://github.com/raspberrypi/pico-examples/blob/master/pio/squarewave/squarewave.c Lines 63 - 67

```
63      // Set the state machine running. The PIO CTRL register is global within a
64      // PIO instance, so you can start/stop multiple state machines
65      // simultaneously. We're using the register's hardware atomic set alias to
66      // make one bit high without doing a read-modify-write on the register.
67      hw_set_bits(&pio->ctrl, 1 << (PIO_CTRL_SM_ENABLE_LSB + 0));
```

Most instructions are executed from the instruction memory, but there are other sources, which can be freely mixed:

- Instructions written to a special configuration register (`SMx INSTR`) are immediately executed, momentarily interrupting other execution. For example, a `JMP` instruction written to `SMx INSTR` will cause the state machine to start executing from a different location.
- Instructions can be executed from a register, using the `MOV EXEC` instruction.
- Instructions can be executed from the output shifter, using the `OUT EXEC` instruction

The last of these is particularly versatile: instructions can be embedded in the stream of data passing through the FIFO. The I2C example uses this to embed e.g. `STOP` and `RESTART` line conditions alongside normal data. In the case of `MOV` and `OUT EXEC`, the `MOV`/`OUT` itself executes in one cycle, and the executee on the next.

3.2.3. Registers

Each state machine possesses a small number of internal registers. These hold input or output data, and temporary values such as loop counter variables.

3.2.3.1. Output Shift Register (OSR)

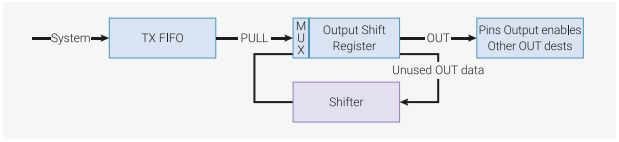

Figure 40. Output Shift Register (OSR). Data is parcelled out 1…32 bits at a time, and unused data is recycled by a bidirectional shifter. Once empty, the OSR is reloaded from the TX FIFO.

The Output Shift Register (OSR) holds and shifts output data, between the TX FIFO and the pins (or other destinations, such as the scratch registers).

- `PULL` instructions: remove a 32-bit word from the TX FIFO and place into the OSR.
- `OUT` instructions shift data from the OSR to other destinations, 1…32 bits at a time.
- The OSR fills with zeroes as data is shifted out
- The state machine will automatically refill the OSR from the FIFO on an `OUT` instruction, once some total shift count threshold is reached, if autopull is enabled
- Shift direction can be left/right, configurable by the processor via configuration registers

For example, to stream data through the FIFO and output to the pins at a rate of one byte per two clocks:

```
1 .program pull_example1
2 loop:
3     out pins, 8
4 public entry_point:
5     pull
6     out pins, 8 [1]
7     out pins, 8 [1]
8     out pins, 8
9     jmp loop
```

Autopull (see Section 3.5.4) allows the hardware to automatically refill the OSR in the majority of cases, with the state machine stalling if it tries to `OUT` from an empty OSR. This has two benefits:

- No instructions spent on explicitly pulling from FIFO at the right time
- Higher throughput: can output up to 32 bits on every single clock cycle, if the FIFO stays topped up

After configuring autopull, the above program can be simplified to the following, which behaves identically:

```
1 .program pull_example2
2
3 loop:
4     out pins, 8
5 public entry_point:
6     jmp loop
```

Program wrapping (Section 3.5.2) allows further simplification and, if desired, an output of 1 byte every system clock cycle.

```
1 .program pull_example3
2
3 public entry_point:
4 .wrap_target
5     out pins, 8 [1]
6 .wrap
```

3.2.3.2. Input Shift Register (ISR)



Figure 41. Input Shift Register (ISR). Data enters 1…32 bits at a time, and current contents is shifted left or right to make room. Once full, contents is written to the RX FIFO.

- `IN` instructions shift 1…32 bits at a time into the register.
- `PUSH` instructions write the ISR contents to the RX FIFO.
- The ISR is cleared to all-zeroes when pushed.
- The state machine will automatically push the ISR on an `IN` instruction, once some shift threshold is reached, if autopush is enabled.
- Shift direction is configurable by the processor via configuration registers

Some peripherals, like UARTs, must shift in from the left to get correct bit order, since the wire order is LSB-first; however, the processor may expect the resulting byte to be right-aligned. This is solved by the special `null` input source, which allows the programmer to shift some number of zeroes into the ISR, following the data.

3.2.3.3. Shift Counters

State machines remember how many bits, in total, have been shifted out of the OSR via `OUT` instructions, and into the `ISR` via `IN` instructions. This information is tracked at all times by a pair of hardware counters — the output shift counter and the input shift counter — each capable of holding values from 0 to 32 inclusive. With each shift operation, the relevant counter is incremented by the shift count, up to the maximum value of 32 (equal to the width of the shift register). The state machine can be configured to perform certain actions when a counter reaches a configurable threshold:

- The OSR can be automatically refilled once some number of bits have been shifted out. See Section 3.5.4
- The ISR can be automatically emptied once some number of bits have been shifted in. See Section 3.5.4
- `PUSH` or `PULL` instructions can be conditioned on the input or output shift counter, respectively

On PIO reset, or the assertion of `CTRL_SM_RESTART`, the input shift counter is cleared to 0 (nothing yet shifted in), and the output shift counter is initialised to 32 (nothing remaining to be shifted out; fully exhausted). Some other instructions affect the shift counters:

- A successful `PULL` clears the output shift counter to 0
- A successful `PUSH` clears the input shift counter to 0
- `MOV OSR, ⋯` (i.e. any `MOV` instruction that writes `OSR`) clears the output shift counter to 0
- `MOV ISR, ⋯` (i.e. any `MOV` instruction that writes `ISR`) clears the input shift counter to 0
- `OUT ISR, count` sets the input shift counter to `count`

3.2.3.4. Scratch Registers

Each state machine has two 32-bit internal scratch registers, called `X` and `Y`.

They are used as:

- Source/destination for `IN`/`OUT`/`SET`/`MOV`
- Source for branch conditions

For example, suppose we wanted to produce a long pulse for "1" data bits, and a short pulse for "0" data bits:

```
 1 .program ws2812_led
 2
 3 public entry_point:
 4     pull
 5     set x, 23       ; Loop over 24 bits
 6 bitloop:
 7     set pins, 1     ; Drive pin high
 8     out y, 1 [5]    ; Shift 1 bit out, and write it to y
 9     jmp !y skip     ; Skip the extra delay if the bit was 0
10     nop [5]
11 skip:
12     set pins, 0 [5]
13     jmp x-- bitloop ; Jump if x nonzero, and decrement x
14     jmp entry_point
```

Here `X` is used as a loop counter, and `Y` is used as a temporary variable for branching on single bits from the OSR. This program can be used to drive a WS2812 LED interface, although more compact implementations are possible (as few as 3 instructions).

`MOV` allows the use of the scratch registers to save/restore the shift registers if, for example, you would like to repeatedly shift out the same sequence.

NOTE

A much more compact WS2812 example (4 instructions total) is shown in Section 3.6.2

3.2.3.5. FIFOs

Each state machine has a pair of 4-word deep FIFOs, one for data transfer from system to state machine (TX), and the other for state machine to system (RX). The TX FIFO is written to by system busmasters, such as a processor or DMA controller, and the RX FIFO is written to by the state machine. FIFOs decouple the timing of the PIO state machines and the system bus, allowing state machines to go for longer periods without processor intervention.

FIFOs also generate data request (DREQ) signals, which allow a system DMA controller to pace its reads/writes based on the presence of data in an RX FIFO, or space for new data in a TX FIFO. This allows a processor to set up a long transaction, potentially involving many kilobytes of data, which will proceed with no further processor intervention.

Often, a state machine is only transferring data in one direction. In this case the `SHIFTCTRL_FJOIN` option can merge the two FIFOs into a single 8-entry FIFO going in one direction only. This is useful for high-bandwidth interfaces such as DPI.

3.2.4. Stalling

State machines may momentarily pause execution for a number of reasons:

- A `WAIT` instruction's condition is not yet met
- A blocking `PULL` when the TX FIFO is empty, or a blocking `PUSH` when the RX FIFO is full
- An `IRQ WAIT` instruction which has set an IRQ flag, and is waiting for it to clear
- An `OUT` instruction when autopull is enabled, and OSR has already reached its shift threshold
- An `IN` instruction when autopush is enabled, ISR reaches its shift threshold, and the RX FIFO is full

In this case, the program counter does not advance, and the state machine will continue executing this instruction on the next cycle. If the instruction specifies some number of delay cycles before the next instruction starts, these do not begin until **after** the stall clears.

NOTE

Side-set (Section 3.5.1) is not affected by stalls, and always takes place on the first cycle of the attached instruction.

3.2.5. Pin Mapping

PIO controls the output level and direction of up to 32 GPIOs, and can observe their input levels. On every system clock cycle, each state machine may do none, one, or both of the following:

- Change the level or direction of some GPIOs via an `OUT` or `SET` instruction, or read some GPIOs via an `IN` instruction
- Change the level or direction of some GPIOs via a side-set operation

Each of these operations is on one of four contiguous ranges of GPIOs, with the base and count of each range configured via each state machine's `PINCTRL` register. There is a range for each of `OUT`, `SET`, `IN` and side-set operations. Each range can cover any of the GPIOs accessible to a given PIO block (on RP2040 this is the 30 user GPIOs), and the ranges can overlap.

For each individual GPIO output (level and direction separately), PIO considers all 8 writes that may have occurred on that cycle, and applies the write from the highest-numbered state machine. If the same state machine performs a `SET`/`OUT` and a side-set on the same GPIO simultaneously, the side-set is used. If no state machine writes to this GPIO output, its value does not change from the previous cycle.

Generally each state machine's outputs are mapped to a distinct group of GPIOs, implementing some peripheral interface.

3.2.6. IRQ Flags

IRQ flags are state bits which can be set or cleared by state machines or the system. There are 8 in total: all 8 are visible to all state machines, and the lower 4 can also be masked into one of PIO's interrupt request lines, via the `IRQ0_INTE` and `IRQ1_INTE` control registers.

They have two main uses:

- Asserting system level interrupts from a state machine program, and optionally waiting for the interrupt to be acknowledged
- Synchronising execution between two state machines

State machines interact with the flags via the `IRQ` and `WAIT` instructions.

3.2.7. Interactions Between State Machines

The instruction memory is implemented as a 1-write 4-read register file, so all four state machines can read an instruction on the same cycle, without stalling.

There are three ways to apply the multiple state machines:

- Pointing multiple state machines at the same program
- Pointing multiple state machines at different programs
- Using multiple state machines to run different parts of the same interface, e.g. TX and RX side of a UART, or clock/hsync and pixel data on a DPI display

State machines can not communicate data, but they can synchronise with one another by using the IRQ flags. There are 8 flags total (the lower four of which can be masked for use as system IRQs), and each state machine can set or clear any flag using the `IRQ` instruction, and can wait for a flag to go high or low using the `WAIT IRQ` instruction. This allows cycle-accurate synchronisation between state machines.

3.3. PIO Assembler (pioasm)

The PIO Assembler parses a PIO source file and outputs the assembled version ready for inclusion in an RP2040 application. This includes C and C++ applications built against the SDK, and Python programs running on the RP2040 MicroPython port.

This section briefly introduces the directives and instructions that can be used in `pioasm` input. A deeper discussion of how to use `pioasm`, how it is integrated into the SDK build system, extended features such as code pass through, and the various output formats it can produce, is given in the **Raspberry Pi Pico-series C/C++ SDK** book.

3.3.1. Directives

The following directives control the assembly of PIO programs:

Table 363. pioasm directives

.define (PUBLIC) <symbol> <value>	Define an integer symbol named *<symbol>* with the value *<value>* (see Section 3.3.2). If this *.define* appears before the first program in the input file, then the define is global to all programs, otherwise it is local to the program in which it occurs. If *PUBLIC* is specified the symbol will be emitted into the assembled output for use by user code. For the SDK this takes the form of: `#define <program_name>_<symbol> value` for program symbols or `#define <symbol> value` for global symbols
.program <name>	Start a new program with the name *<name>*. Note that that name is used in code so should be alphanumeric/underscore not starting with a digit. The program lasts until another *.program* directive or the end of the source file. PIO instructions are only allowed within a program
.origin <offset>	Optional directive to specify the PIO instruction memory offset at which the program *must* load. Most commonly this is used for programs that must load at offset 0, because they use data based JMPs with the (absolute) jmp target being stored in only a few bits. This directive is invalid outside of a program
.side_set <count> (opt) (pindirs)	If this directive is present, *<count>* indicates the number of side-set bits to be used. Additionally *opt* may be specified to indicate that a `side <value>` is optional for instructions (note this requires stealing an extra bit — in addition to the *<count>* bits — from those available for the instruction delay). Finally, *pindirs* may be specified to indicate that the side set values should be applied to the PINDIRs and not the PINs. This directive is only valid within a program before the first instruction
.wrap_target	Place prior to an instruction, this directive specifies the instruction where execution continues due to program wrapping. This directive is invalid outside of a program, may only be used once within a program, and if not specified defaults to the start of the program
.wrap	Placed after an instruction, this directive specifies the instruction after which, in normal control flow (i.e. `jmp` with false condition, or no `jmp`), the program wraps (to *.wrap_target* instruction). This directive is invalid outside of a program, may only be used once within a program, and if not specified defaults to after the last program instruction.
.lang_opt <lang> <name> <option>	Specifies an option for the program related to a particular language generator. (See Language generators). This directive is invalid outside of a program
.word <value>	Stores a raw 16-bit value as an instruction in the program. This directive is invalid outside of a program.

3.3.2. Values

The following types of values can be used to define integer numbers or branch targets

Table 364. Values in pioasm, i.e. <value>

integer	An integer value e.g. 3 or -7
hex	A hexadecimal value e.g. `0xf`
binary	A binary value e.g. `0b1001`
symbol	A value defined by a `.define` (see `pioasm_define`)
<label>	The instruction offset of the label within the program. This makes most sense when used with a JMP instruction (see Section 3.4.2)
(<expression>)	An expression to be evaluated; see expressions. Note that the parentheses are necessary.

3.3.3. Expressions

Expressions may be freely used within pioasm values.

Table 365. Expressions in pioasm i.e. <expression>

<expression> + <expression>	The sum of two expressions
<expression> - <expression>	The difference of two expressions
*<expression> * <expression>*	The multiplication of two expressions
<expression> / <expression>	The integer division of two expressions
- <expression>	The negation of another expression
:: <expression>	The bit reverse of another expression
<value>	Any value (see Section 3.3.2)

3.3.4. Comments

Line comments are supported with `//` or `;`

C-style block comments are supported via `/*` and `*/`

3.3.5. Labels

Labels are of the form:

```
<symbol>:
```

or

```
PUBLIC <symbol>:
```

at the start of a line.

TIP

A label is really just an automatic `.define` with a value set to the current program instruction offset. A *PUBLIC* label is exposed to the user code in the same way as a *PUBLIC* `.define`.

3.3.6. Instructions

All pioasm instructions follow a common pattern:

<instruction> (*side <side_set_value>*) (*[<delay_value>]*)

where:

<instruction> Is an assembly instruction detailed in the following sections. (See Section 3.4)

<side_set_value> Is a value (see Section 3.3.2) to apply to the side_set pins at the start of the instruction. Note that the rules for a side-set value via `side <side_set_value>` are dependent on the `.side_set` (see `pioasm_side_set`) directive for the program. If no `.side_set` is specified then the `side <side_set_value>` is invalid, if an optional number of sideset pins is specified then `side <side_set_value>` may be present, and if a non-optional number of sideset pins is specified, then `side <side_set_value>` is required. The *<side_set_value>* must fit within the number of side-set bits specified in the `.side_set` directive.

<delay_value> Specifies the number of cycles to delay after the instruction completes. The delay_value is specified as a value (see Section 3.3.2), and in general is between 0 and 31 inclusive (a 5-bit value), however the number of bits is reduced when sideset is enabled via the `.side_set` (see `pioasm_side_set`) directive. If the *<delay_value>* is not present, then the instruction has no delay

NOTE

pioasm instruction names, keywords and directives are case insensitive; lower case is used in the *Assembly Syntax* sections below as this is the style used in the SDK.

NOTE

Commas appear in some *Assembly Syntax* sections below, but are entirely optional, e.g. `out pins, 3` may be written `out pins 3`, and `jmp x-- label` may be written as `jmp x--, label`. The *Assembly Syntax* sections below uses the first style in each case as this is the style used in the SDK.

3.3.7. Pseudoinstructions

Currently pioasm provides one pseudoinstruction, as a convenience:

`nop` Assembles to `mov y, y`. "No operation", has no particular side effect, but a useful vehicle for a side-set operation or an extra delay.

3.4. Instruction Set

3.4.1. Summary

PIO instructions are 16 bits long, and have the following encoding:

Table 366. PIO instruction encoding

Bit:	15	14	13	12	11	10	9	8	7	6	5	4	3	2	1	0
JMP	0	0	0	Delay/side-set					Condition			Address				
WAIT	0	0	1	Delay/side-set					Pol	Source		Index				
IN	0	1	0	Delay/side-set					Source			Bit count				
OUT	0	1	1	Delay/side-set					Destination			Bit count				
PUSH	1	0	0	Delay/side-set					0	IfF	Blk	0	0	0	0	0
PULL	1	0	0	Delay/side-set					1	IfE	Blk	0	0	0	0	0
MOV	1	0	1	Delay/side-set					Destination			Op		Source		
IRQ	1	1	0	Delay/side-set					0	Clr	Wait	Index				
SET	1	1	1	Delay/side-set					Destination			Data				

All PIO instructions execute in one clock cycle.

The function of the 5-bit `Delay/side-set` field depends on the state machine's `SIDESET_COUNT` configuration:

- Up to 5 LSBs (5 minus `SIDESET_COUNT`) encode a number of idle cycles inserted between this instruction and the next.
- Up to 5 MSBs, set by `SIDESET_COUNT`, encode a side-set (Section 3.5.1), which can assert a constant onto some GPIOs, concurrently with main instruction execution.

3.4.2. JMP

3.4.2.1. Encoding

Bit:	15	14	13	12	11	10	9	8	7	6	5	4	3	2	1	0
JMP	0	0	0	Delay/side-set					Condition			Address				

3.4.2.2. Operation

Set program counter to `Address` if `Condition` is true, otherwise no operation.

Delay cycles on a `JMP` always take effect, whether `Condition` is true or false, and they take place *after* `Condition` is evaluated and the program counter is updated.

- Condition:
  - 000: *(no condition)*: Always
  - 001: `!X`: scratch X zero
  - 010: `X--`: scratch X non-zero, prior to decrement
  - 011: `!Y`: scratch Y zero
  - 100: `Y--`: scratch Y non-zero, prior to decrement
  - 101: `X!=Y`: scratch X not equal scratch Y
  - 110: `PIN`: branch on input pin
  - 111: `!OSRE`: output shift register not empty
- Address: Instruction address to jump to. In the instruction encoding this is an absolute address within the PIO instruction memory.

JMP PIN branches on the GPIO selected by EXECCTRL_JMP_PIN, a configuration field which selects one out of the maximum of 32 GPIO inputs visible to a state machine, independently of the state machine's other input mapping. The branch is taken if the GPIO is high.

!OSRE compares the bits shifted out since the last PULL with the shift count threshold configured by SHIFTCTRL_PULL_THRESH. This is the same threshold used by autopull (Section 3.5.4).

JMP X-- and JMP Y-- always decrement scratch register X or Y, respectively. The decrement is not conditional on the current value of the scratch register. The branch is conditioned on the *initial* value of the register, i.e. before the decrement took place: if the register is initially nonzero, the branch is taken.

3.4.2.3. Assembler Syntax

jmp (*<cond>*) *<target>*

where:

<cond>	Is an optional condition listed above (e.g. !x for scratch X zero). If a condition code is not specified, the branch is always taken
<target>	Is a program label or value (see Section 3.3.2) representing instruction offset within the program (the first instruction being offset 0). Note that because the PIO JMP instruction uses absolute addresses in the PIO instruction memory, JMPs need to be adjusted based on the program load offset at runtime. This is handled for you when loading a program with the SDK, but care should be taken when encoding JMP instructions for use by OUT EXEC

3.4.3. WAIT

3.4.3.1. Encoding

Bit:	15	14	13	12	11	10	9	8	7	6	5	4	3	2	1	0
WAIT	0	0	1	Delay/side-set					Pol	Source		Index				

3.4.3.2. Operation

Stall until some condition is met.

Like all stalling instructions (Section 3.2.4), delay cycles begin after the instruction *completes*. That is, if any delay cycles are present, they do not begin counting until *after* the wait condition is met.

- Polarity:
  - 1: wait for a 1.
  - 0: wait for a 0.
- Source: what to wait on. Values are:
  - 00: GPIO: System GPIO input selected by Index. This is an absolute GPIO index, and is not affected by the state machine's input IO mapping.
  - 01: PIN: Input pin selected by Index. This state machine's input IO mapping is applied first, and then Index selects which of the mapped bits to wait on. In other words, the pin is selected by adding Index to the PINCTRL_IN_BASE configuration, modulo 32.
  - 10: IRQ: PIO IRQ flag selected by Index

- 11: Reserved

- Index: which pin or bit to check.

`WAIT x IRQ` behaves slightly differently from other `WAIT` sources:

- If `Polarity` is 1, the selected IRQ flag is cleared by the state machine upon the wait condition being met.
- The flag index is decoded in the same way as the `IRQ` index field: if the MSB is set, the state machine ID (0…3) is added to the IRQ index, by way of modulo-4 addition on the two LSBs. For example, state machine 2 with a flag value of '0x11' will wait on flag 3, and a flag value of '0x13' will wait on flag 1. This allows multiple state machines running the same program to synchronise with each other.

CAUTION

`WAIT 1 IRQ x` should not be used with IRQ flags presented to the interrupt controller, to avoid a race condition with a system interrupt handler

3.4.3.3. Assembler Syntax

wait <polarity> gpio <gpio_num>

wait <polarity> pin <pin_num>

wait <polarity> irq <irq_num> (*rel*)

where:

<polarity>	Is a value (see Section 3.3.2) specifying the polarity (either 0 or 1)
<pin_num>	Is a value (see Section 3.3.2) specifying the input pin number (as mapped by the SM input pin mapping)
<gpio_num>	Is a value (see Section 3.3.2) specifying the actual GPIO pin number
<irq_num> (*rel*)	Is a value (see Section 3.3.2) specifying The irq number to wait on (0-7). If *rel* is present, then the actual irq number used is calculating by replacing the low two bits of the irq number (irq_num_{10}) with the low two bits of the sum ($irq_num_{10} + sm_num_{10}$) where sm_num_{10} is the state machine number

3.4.4. IN

3.4.4.1. Encoding

Bit:	15	14	13	12	11	10	9	8	7	6	5	4	3	2	1	0
`IN`	0	1	0	Delay/side-set					Source			Bit count				

3.4.4.2. Operation

Shift `Bit count` bits from `Source` into the Input Shift Register (ISR). Shift direction is configured for each state machine by `SHIFTCTRL_IN_SHIFTDIR`. Additionally, increase the input shift count by `Bit count`, saturating at 32.

- Source:
  - 000: `PINS`
  - 001: `X` (scratch register X)

- 010: `Y` (scratch register Y)
- 011: `NULL` (all zeroes)
- 100: Reserved
- 101: Reserved
- 110: `ISR`
- 111: `OSR`

- Bit count: How many bits to shift into the ISR. 1…32 bits, 32 is encoded as `00000`.

If automatic push is enabled, `IN` will also push the ISR contents to the RX FIFO if the push threshold is reached (`SHIFTCTRL_PUSH_THRESH`). `IN` still executes in one cycle, whether an automatic push takes place or not. The state machine will stall if the RX FIFO is full when an automatic push occurs. An automatic push clears the ISR contents to all-zeroes, and clears the input shift count. See Section 3.5.4.

`IN` always uses the least significant `Bit count` bits of the source data. For example, if `PINCTRL_IN_BASE` is set to 5, the instruction `IN PINS, 3` will take the values of pins 5, 6 and 7, and shift these into the ISR. First the ISR is shifted to the left or right to make room for the new input data, then the input data is copied into the gap this leaves. The bit order of the input data is not dependent on the shift direction.

`NULL` can be used for shifting the ISR's contents. For example, UARTs receive the LSB first, so must shift to the right. After 8 `IN PINS, 1` instructions, the input serial data will occupy bits 31…24 of the ISR. An `IN NULL, 24` instruction will shift in 24 zero bits, aligning the input data at ISR bits 7…0. Alternatively, the processor or DMA could perform a byte read from FIFO address + 3, which would take bits 31…24 of the FIFO contents.

3.4.4.3. Assembler Syntax

in <source>, <bit_count>

where:

<source>	Is one of the sources specified above.
<bit_count>	Is a value (see Section 3.3.2) specifying the number of bits to shift (valid range 1-32)

3.4.5. OUT

3.4.5.1. Encoding

Bit:	15	14	13	12	11	10	9	8	7	6	5	4	3	2	1	0
`OUT`	0	1	1	Delay/side-set					Destination			Bit count				

3.4.5.2. Operation

Shift `Bit count` bits out of the Output Shift Register (OSR), and write those bits to `Destination`. Additionally, increase the output shift count by `Bit count`, saturating at 32.

- Destination:
  - 000: `PINS`
  - 001: `X` (scratch register X)
  - 010: `Y` (scratch register Y)

- 011: NULL (discard data)
- 100: PINDIRS
- 101: PC
- 110: ISR (also sets ISR shift counter to Bit count)
- 111: EXEC (Execute OSR shift data as instruction)

- Bit count: how many bits to shift out of the OSR. 1…32 bits, 32 is encoded as 00000.

A 32-bit value is written to Destination: the lower Bit count bits come from the OSR, and the remainder are zeroes. This value is the least significant Bit count bits of the OSR if SHIFTCTRL_OUT_SHIFTDIR is to the right, otherwise it is the most significant bits.

PINS and PINDIRS use the OUT pin mapping, as described in Section 3.5.6.

If automatic pull is enabled, the OSR is automatically refilled from the TX FIFO if the pull threshold, SHIFTCTRL_PULL_THRESH, is reached. The output shift count is simultaneously cleared to 0. In this case, the OUT will stall if the TX FIFO is empty, but otherwise still executes in one cycle. The specifics are given in Section 3.5.4.

OUT EXEC allows instructions to be included inline in the FIFO datastream. The OUT itself executes on one cycle, and the instruction from the OSR is executed on the next cycle. There are no restrictions on the types of instructions which can be executed by this mechanism. Delay cycles on the initial OUT are ignored, but the executee may insert delay cycles as normal.

OUT PC behaves as an unconditional jump to an address shifted out from the OSR.

3.4.5.3. Assembler Syntax

out <destination>, <bit_count>

where:

<destination>	Is one of the destinations specified above.
<bit_count>	Is a value (see Section 3.3.2) specifying the number of bits to shift (valid range 1-32)

3.4.6. PUSH

3.4.6.1. Encoding

Bit:	15	14	13	12	11	10	9	8	7	6	5	4	3	2	1	0
PUSH	1	0	0	Delay/side-set					0	IfF	Blk	0	0	0	0	0

3.4.6.2. Operation

Push the contents of the ISR into the RX FIFO, as a single 32-bit word. Clear ISR to all-zeroes.

- IfFull: If 1, do nothing unless the total input shift count has reached its threshold, SHIFTCTRL_PUSH_THRESH (the same as for autopush; see Section 3.5.4).
- Block: If 1, stall execution if RX FIFO is full.

PUSH IFFULL helps to make programs more compact, like autopush. It is useful in cases where the IN would stall at an inappropriate time if autopush were enabled, e.g. if the state machine is asserting some external control signal at this point.

The PIO assembler sets the Block bit by default. If the Block bit is not set, the PUSH does not stall on a full RX FIFO, instead continuing immediately to the next instruction. The FIFO state and contents are unchanged when this happens. The ISR is still cleared to all-zeroes, and the FDEBUG_RXSTALL flag is set (the same as a blocking PUSH or autopush to a full RX FIFO) to indicate data was lost.

3.4.6.3. Assembler Syntax

push (*iffull*)

push (*iffull*) block

push (*iffull*) noblock

where:

iffull	Is equivalent to IfFull == 1 above. i.e. the default if this is not specified is IfFull == 0
block	Is equivalent to Block == 1 above. This is the default if neither *block* nor *noblock* are specified
noblock	Is equivalent to Block == 0 above.

3.4.7. PULL

3.4.7.1. Encoding

Bit:	15	14	13	12	11	10	9	8	7	6	5	4	3	2	1	0
PULL	1	0	0	Delay/side-set					1	IfE	Blk	0	0	0	0	0

3.4.7.2. Operation

Load a 32-bit word from the TX FIFO into the OSR.

- IfEmpty: If 1, do nothing unless the total output shift count has reached its threshold, SHIFTCTRL_PULL_THRESH (the same as for autopull; see Section 3.5.4).
- Block: If 1, stall if TX FIFO is empty. If 0, pulling from an empty FIFO copies scratch X to OSR.

Some peripherals (UART, SPI…) should halt when no data is available, and pick it up as it comes in; others (I2S) should clock continuously, and it is better to output placeholder or repeated data than to stop clocking. This can be achieved with the Block parameter.

A nonblocking PULL on an empty FIFO has the same effect as MOV OSR, X. The program can either preload scratch register X with a suitable default, or execute a MOV X, OSR after each PULL NOBLOCK, so that the last valid FIFO word will be recycled until new data is available.

PULL IFEMPTY is useful if an OUT with autopull would stall in an inappropriate location when the TX FIFO is empty. IfEmpty permits some of the same program simplifications as autopull — for example, the elimination of an outer loop counter — but the stall occurs at a controlled point in the program.

NOTE

When autopull is enabled, any `PULL` instruction is a no-op when the OSR is full, so that the `PULL` instruction behaves as a barrier. `OUT NULL, 32` can be used to explicitly discard the OSR contents. See Section 3.5.4.2 for more detail.

3.4.7.3. Assembler Syntax

pull (*ifempty*)

pull (*ifempty*) block

pull (*ifempty*) noblock

where:

ifempty	Is equivalent to `IfEmpty == 1` above. i.e. the default if this is not specified is `IfEmpty == 0`
block	Is equivalent to `Block == 1` above. This is the default if neither *block* nor *noblock* are specified
noblock	Is equivalent to `Block == 0` above.

3.4.8. MOV

3.4.8.1. Encoding

Bit:	15	14	13	12	11	10	9	8	7	6	5	4	3	2	1	0
`MOV`	1	0	1	Delay/side-set					Destination			Op		Source		

3.4.8.2. Operation

Copy data from `Source` to `Destination`.

- Destination:
  - 000: `PINS` (Uses same pin mapping as `OUT`)
  - 001: `X` (Scratch register X)
  - 010: `Y` (Scratch register Y)
  - 011: Reserved
  - 100: `EXEC` (Execute data as instruction)
  - 101: `PC`
  - 110: `ISR` (Input shift counter is reset to 0 by this operation, i.e. empty)
  - 111: `OSR` (Output shift counter is reset to 0 by this operation, i.e. full)
- Operation:
  - 00: None
  - 01: Invert (bitwise complement)
  - 10: Bit-reverse
  - 11: Reserved

- Source:
  - 000: PINS (Uses same pin mapping as IN)
  - 001: X
  - 010: Y
  - 011: NULL
  - 100: Reserved
  - 101: STATUS
  - 110: ISR
  - 111: OSR

MOV PC causes an unconditional jump. MOV EXEC has the same behaviour as OUT EXEC (Section 3.4.5), and allows register contents to be executed as an instruction. The MOV itself executes in 1 cycle, and the instruction in Source on the next cycle. Delay cycles on MOV EXEC are ignored, but the executee may insert delay cycles as normal.

The STATUS source has a value of all-ones or all-zeroes, depending on some state machine status such as FIFO full/empty, configured by EXECCTRL_STATUS_SEL.

MOV can manipulate the transferred data in limited ways, specified by the Operation argument. Invert sets each bit in Destination to the logical NOT of the corresponding bit in Source, i.e. 1 bits become 0 bits, and vice versa. Bit reverse sets each bit *n* in Destination to bit 31 - *n* in Source, assuming the bits are numbered 0 to 31.

MOV dst, PINS reads pins using the IN pin mapping, and writes the full 32-bit value to the destination without masking. The LSB of the read value is the pin indicated by PINCTRL_IN_BASE, and each successive bit comes from a higher-numbered pin, wrapping after 31.

3.4.8.3. Assembler Syntax

mov <destination>, (op) <source>

where:

<destination>	Is one of the destinations specified above.
<op>	If present, is: ! or ~ for NOT (Note: this is always a bitwise NOT) :: for bit reverse
<source>	Is one of the sources specified above.

3.4.9. IRQ

3.4.9.1. Encoding

Bit:	15	14	13	12	11	10	9	8	7	6	5	4	3	2	1	0
IRQ	1	1	0	Delay/side-set					0	Clr	Wait	Index				

3.4.9.2. Operation

Set or clear the IRQ flag selected by `Index` argument.

- Clear: if 1, clear the flag selected by `Index`, instead of raising it. If `Clear` is set, the `Wait` bit has no effect.
- Wait: if 1, halt until the raised flag is lowered again, e.g. if a system interrupt handler has acknowledged the flag.
- Index:
  - The 3 LSBs specify an IRQ index from 0-7. This IRQ flag will be set/cleared depending on the Clear bit.
  - If the MSB is set, the state machine ID (0…3) is added to the IRQ index, by way of modulo-4 addition on the two LSBs. For example, state machine 2 with a flag value of 0x11 will raise flag 3, and a flag value of 0x13 will raise flag 1.

IRQ flags 4-7 are visible only to the state machines; IRQ flags 0-3 can be routed out to system level interrupts, on either of the PIO's two external interrupt request lines, configured by `IRQ0_INTE` and `IRQ1_INTE`.

The modulo addition bit allows relative addressing of 'IRQ' and 'WAIT' instructions, for synchronising state machines which are running the same program. Bit 2 (the third LSB) is unaffected by this addition.

If `Wait` is set, `Delay` cycles do not begin until after the wait period elapses.

3.4.9.3. Assembler Syntax

irq <irq_num> (rel)

irq set <irq_num> (rel)

irq nowait <irq_num> (rel)

irq wait <irq_num> (rel)

irq clear <irq_num> (rel)

where:

<irq_num> (rel)	Is a value (see Section 3.3.2) specifying The irq number to wait on (0-7). If *rel* is present, then the actual irq number used is calculating by replacing the low two bits of the irq number (irq_num_{10}) with the low two bits of the sum ($irq_num_{10} + sm_num_{10}$) where sm_num_{10} is the state machine number
irq	Means set the IRQ without waiting
irq set	Also means set the IRQ without waiting
irq nowait	Again, means set the IRQ without waiting
irq wait	Means set the IRQ and wait for it to be cleared before proceeding
irq clear	Means clear the IRQ

3.4.10. SET

3.4.10.1. Encoding

Bit:	15	14	13	12	11	10	9	8	7	6	5	4	3	2	1	0
`SET`	1	1	1	Delay/side-set					Destination			Data				

3.4.10.2. Operation

Write immediate value `Data` to `Destination`.

- Destination:
  - 000: `PINS`
  - 001: `X` (scratch register X) 5 LSBs are set to `Data`, all others cleared to 0.
  - 010: `Y` (scratch register Y) 5 LSBs are set to `Data`, all others cleared to 0.
  - 011: Reserved
  - 100: `PINDIRS`
  - 101: Reserved
  - 110: Reserved
  - 111: Reserved
- Data: 5-bit immediate value to drive to pins or register.

This can be used to assert control signals such as a clock or chip select, or to initialise loop counters. As `Data` is 5 bits in size, scratch registers can be `SET` to values from 0-31, which is sufficient for a 32-iteration loop.

The mapping of `SET` and `OUT` onto pins is configured independently. They may be mapped to distinct locations, for example if one pin is to be used as a clock signal, and another for data. They may also be overlapping ranges of pins: a UART transmitter might use `SET` to assert start and stop bits, and `OUT` instructions to shift out FIFO data to the same pins.

3.4.10.3. Assembler Syntax

set <destination>, <value>

where:

<destination>	Is one of the destinations specified above.
<value>	The value (see Section 3.3.2) to set (valid range 0-31)

3.5. Functional Details

3.5.1. Side-set

Side-set is a feature that allows state machines to change the level or direction of up to 5 pins, concurrently with the main execution of the instruction.

One example where this is necessary is a fast SPI interface: here a clock transition (toggling 1→0 or 0→1) must be simultaneous with a data transition, where a new data bit is shifted from the OSR to a GPIO. In this case an `OUT` with a side-set would achieve both of these at once.

This makes the timing of the interface more precise, reduces the overall program size (as a separate `SET` instruction is not needed to toggle the clock pin), and also increases the maximum frequency the SPI can run at.

Side-set also makes GPIO mapping much more flexible, as its mapping is independent from `SET`. The example I2C code allows SDA and SCL to be mapped to any two arbitrary pins, if clock stretching is disabled. Normally, SCL toggles to synchronise data transfer, and SDA contains the data bits being shifted out. However, some particular I2C sequences such as `Start` and `Stop` line conditions, need a fixed pattern to be driven on SDA as well as SCL. The mapping I2C uses to achieve this is:

- Side-set → SCL
- OUT → SDA
- SET → SDA

This lets the state machine serve the two use cases of data on SDA and clock on SCL, or fixed transitions on both SDA and SCL, while still allowing SDA and SCL to be mapped to any two GPIOs of choice.

The side-set data is encoded in the Delay/side-set field of each instruction. Any instruction can be combined with side-set, including instructions which write to the pins, such as OUT PINS or SET PINS. Side-set's pin mapping is independent from OUT and SET mappings, though it may overlap. If side-set and an OUT or SET write to the same pin simultaneously, the side-set data is used.

NOTE

If an instruction stalls, the side-set still takes effect immediately.

```
1 .program spi_tx_fast
2 .side_set 1
3
4 loop:
5     out pins, 1  side 0
6     jmp loop     side 1
```

The spi_tx_fast example shows two benefits of this: data and clock transitions can be more precisely co-aligned, and programs can be made faster overall, with an output of one bit per two system clock cycles in this case. Programs can also be made smaller.

There are four things to configure when using side-set:

1. The number of MSBs of the Delay/side-set field to use for side-set rather than delay. This is configured by PINCTRL_SIDESET_COUNT. If this is set to 5, delay cycles are not available. If set to 0, no side-set will take place.
2. Whether to use the most significant of these bits as an enable. Side-set takes place on instructions where the enable is high. If there is no enable bit, **every** instruction on that state machine will perform a side-set, if SIDESET_COUNT is nonzero. This is configured by EXECCTRL_SIDE_EN.
3. The GPIO number to map the least-significant side-set bit to. Configured by PINCTRL_SIDESET_BASE.
4. Whether side-set writes to GPIO levels or GPIO directions. Configured by EXECCTRL_SIDE_PINDIR

In the above example, we have only one side-set data bit, and every instruction performs a side-set, so no enable bit is required. SIDESET_COUNT would be 1, SIDE_EN would be false. SIDE_PINDIR would also be false, as we want to drive the clock high and low, not high- and low-impedance. SIDESET_BASE would select the GPIO the clock is driven from.

3.5.2. Program Wrapping

PIO programs often have an "outer loop": they perform the same sequence of steps, repetitively, as they transfer a stream of data between the FIFOs and the outside world. The square wave program from the introduction is a minimal example of this:

Pico Examples: https://github.com/raspberrypi/pico-examples/blob/master/pio/squarewave/squarewave.pio Lines 8 - 13

```
 8 .program squarewave
 9     set pindirs, 1   ; Set pin to output
10 again:
11     set pins, 1 [1]  ; Drive pin high and then delay for one cycle
12     set pins, 0      ; Drive pin low
```

```
13     jmp again        ; Set PC to label `again`
```

The main body of the program drives a pin high, and then low, producing one period of a square wave. The entire program then loops, driving a periodic output. The jump itself takes one cycle, as does each `set` instruction, so to keep the high and low periods of the same duration, the `set pins, 1` has a single delay cycle added, which makes the state machine idle for one cycle before executing the `set pins, 0` instruction. In total, each loop takes four cycles. There are two frustrations here:

- The `JMP` takes up space in the instruction memory that could be used for other programs
- The extra cycle taken to execute the `JMP` ends up *halving* the maximum output rate

As the Program Counter (`PC`) naturally wraps to 0 when incremented past 31, we could solve the second of these by filling the entire instruction memory with a repeating pattern of `set pins, 1` and `set pins, 0`, but this is wasteful. State machines have a hardware feature, configured via their `EXECCTRL` control register, which solves this common case.

Pico Examples: https://github.com/raspberrypi/pico-examples/blob/master/pio/squarewave/squarewave_wrap.pio Lines 12 - 20

```
12 .program squarewave_wrap
13 ; Like squarewave, but use the state machine's .wrap hardware instead of an
14 ; explicit jmp. This is a free (0-cycle) unconditional jump.
15
16     set pindirs, 1   ; Set pin to output
17 .wrap_target
18     set pins, 1 [1]  ; Drive pin high and then delay for one cycle
19     set pins, 0 [1]  ; Drive pin low and then delay for one cycle
20 .wrap
```

After executing an instruction from the program memory, state machines use the following logic to update `PC`:

1. If the current instruction is a `JMP`, and the `Condition` is true, set `PC` to the `Target`
2. Otherwise, if `PC` matches `EXECCTRL_WRAP_TOP`, set `PC` to `EXECCTRL_WRAP_BOTTOM`
3. Otherwise, increment `PC`, or set to 0 if the current value is 31.

The `.wrap_target` and `.wrap` assembly directives in `pioasm` are essentially labels. They export constants which can be written to the `WRAP_BOTTOM` and `WRAP_TOP` control fields, respectively:

Pico Examples: https://github.com/raspberrypi/pico-examples/blob/master/pio/squarewave/generated/squarewave_wrap.pio.h

```
 1 // -------------------------------------------------- //
 2 // This file is autogenerated by pioasm; do not edit! //
 3 // -------------------------------------------------- //
 4
 5 #pragma once
 6
 7 #include "hardware/pio.h"
 8
 9 // --------------- //
10 // squarewave_wrap //
11 // --------------- //
12
13 #define squarewave_wrap_wrap_target 1
14 #define squarewave_wrap_wrap 2
15 #define squarewave_wrap_pio_version 0
16
17 static const uint16_t squarewave_wrap_program_instructions[] = {
18     0xe081, //  0: set    pindirs, 1
19             //     .wrap_target
20     0xe101, //  1: set    pins, 1               [1]
21     0xe100, //  2: set    pins, 0               [1]
```

```
22             //     .wrap
23 };
24
25 static const struct pio_program squarewave_wrap_program = {
26     .instructions = squarewave_wrap_program_instructions,
27     .length = 3,
28     .origin = -1,
29     .pio_version = squarewave_wrap_pio_version,
30     .used_gpio_ranges = 0x0
31 #endif
32 };
33
34 static inline pio_sm_config squarewave_wrap_program_get_default_config(uint offset) {
35     pio_sm_config c = pio_get_default_sm_config();
36     sm_config_set_wrap(&c, offset + squarewave_wrap_wrap_target, offset +
   squarewave_wrap_wrap);
37     return c;
38 }
```

This is raw output from the PIO assembler, `pioasm`, which has created a default `pio_sm_config` object containing the `WRAP` register values from the program listing. The control register fields could also be initialised directly.

NOTE

`WRAP_BOTTOM` and `WRAP_TOP` are absolute addresses in the PIO instruction memory. If a program is loaded at an offset, the wrap addresses must be adjusted accordingly.

The `squarewave_wrap` example has delay cycles inserted, so that it behaves identically to the original `squarewave` program. Thanks to program wrapping, these can now be removed, so that the output toggles twice as fast, while maintaining an even balance of high and low periods.

Pico Examples: https://github.com/raspberrypi/pico-examples/blob/master/pio/squarewave/squarewave_fast.pio Lines 12 - 18

```
12 .program squarewave_fast
13 ; Like squarewave_wrap, but remove the delay cycles so we can run twice as fast.
14     set pindirs, 1   ; Set pin to output
15 .wrap_target
16     set pins, 1      ; Drive pin high
17     set pins, 0      ; Drive pin low
18 .wrap
```

3.5.3. FIFO Joining

By default, each state machine possesses a 4-entry FIFO in each direction: one for data transfer from system to state machine (TX), the other for the reverse direction (RX). However, many applications do not require bidirectional data transfer between the system and an individual state machine, but may benefit from deeper FIFOs: in particular, high-bandwidth interfaces such as DPI. For these cases, `SHIFTCTRL_FJOIN` can merge the two 4-entry FIFOs into a single 8-entry FIFO.

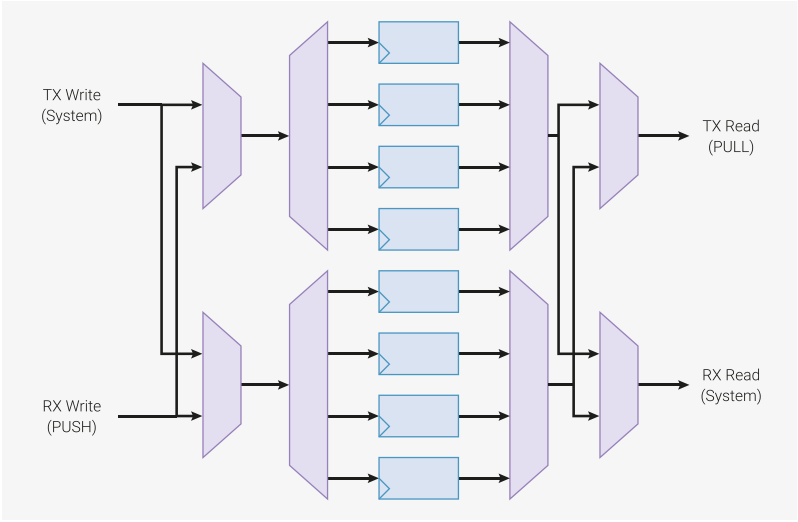

Figure 42. Joinable dual FIFO. A pair of four-entry FIFOs, implemented with four data registers, a 1:4 decoder and a 4:1 multiplexer. Additional multiplexing allows write data and read data to cross between the TX and RX lanes, so that all 8 entries are accessible from both ports

Another example is a UART: because the TX/CTS and RX/RTS parts a of a UART are asynchronous, they are implemented on two separate state machines. It would be wasteful to leave half of each state machine's FIFO resources idle. The ability to join the two halves into just a TX FIFO for the TX/CTS state machine, or just an RX FIFO in the case of the RX/RTS state machine, allows full utilisation. A UART equipped with an 8-deep FIFO can be left alone for twice as long between interrupts as one with only a 4-deep FIFO.

When one FIFO is increased in size (from 4 to 8), the other FIFO on that state machine is reduced to zero. For example, if joining to TX, the RX FIFO is unavailable, and any `PUSH` instruction will stall. The RX FIFO will appear both `RXFULL` and `RXEMPTY` in the `FSTAT` register. The converse is true if joining to RX: the TX FIFO is unavailable, and the `TXFULL` and `TXEMPTY` bits for this state machine will both be set in `FSTAT`. Setting both FJOIN_RX and FJOIN_TX makes both FIFOs unavailable.

8 FIFO entries is sufficient for 1 word per clock through the RP2040 system DMA, provided the DMA is not slowed by contention with other masters.

CAUTION

Changing `FJOIN` discards any data present in the state machine's FIFOs. If this data is irreplaceable, it must be drained beforehand.

3.5.4. Autopush and Autopull

With each `OUT` instruction, the OSR gradually empties, as data is shifted out. Once empty, it must be refilled: for example, a `PULL` transfers one word of data from the TX FIFO to the OSR. Similarly, the ISR must be emptied once full. One approach to this is a loop which performs a `PULL` after an appropriate amount of data has been shifted:

```
 1 .program manual_pull
 2 .side_set 1 opt
 3
 4 .wrap_target
 5     set x, 2                  ; X = bit count - 2
 6     pull            side 1 [1]  ; Stall here if no TX data
 7 bitloop:
 8     out pins, 1     side 0 [1]  ; Shift out data bit and toggle clock low
 9     jmp x-- bitloop side 1 [1]  ; Loop runs 3 times
10     out pins, 1     side 0      ; Shift out last bit before reloading X
11 .wrap
```

This program shifts out 4 bits from each FIFO word, with an accompanying bit clock, at a constant rate of 1 bit per 4 cycles. When the TX FIFO is empty, it stalls with the clock high (noting that side-set still takes place on cycles where the

instruction stalls). Figure 43 shows how a state machine would execute this program.

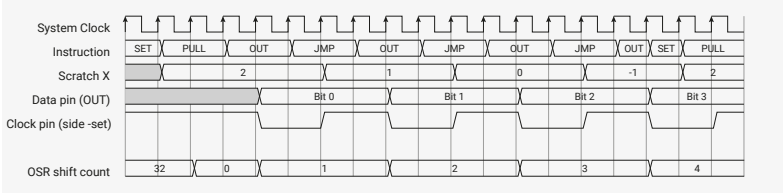

Figure 43. Execution of manual_pull program. X is used as a loop counter. On each iteration, one data bit is shifted out, and the clock is asserted low, then high. A delay cycle on each instruction brings the total up to four cycles per iteration. After the third loop, a fourth bit is shifted out, and the state machine immediately returns to the start of the program to reload the loop counter and pull fresh data, while maintaining the 4 cycles/bit cadence.

This program has some limitations:

- It occupies 5 instruction slots, but only 2 of these are immediately useful (`out pins, 1 set 0` and ⋯ `set 1`), for outputting serial data and a clock.
- Its throughput is limited to system clock over 4, due to the extra cycles required to pull in new data, and reload the loop counter

This is a common type of problem for PIO, so each state machine has some extra hardware to handle it. State machines keep track of the total shift count `OUT` of the OSR and `IN` to the ISR, and trigger certain actions once these counters reach a programmable threshold.

- On an `OUT` instruction which reaches or exceeds the pull threshold, the state machine can simultaneously refill the OSR from the TX FIFO, if data is available.
- On an `IN` instruction which reaches or exceeds the push threshold, the state machine can write the shift result directly to the RX FIFO, and clear the ISR.

The `manual_pull` example can be rewritten to take advantage of automatic pull (autopull):

```
1 .program autopull
2 .side_set 1
3
4 .wrap_target
5     out pins, 1   side 0    [1]
6     nop           side 1    [1]
7 .wrap
```

This is shorter and simpler than the original, and can run *twice* as fast, if the delay cycles are removed, since the hardware refills the OSR "for free". Note that the program does not determine the total number of bits to be shifted before the next pull; the hardware automatically pulls once the programmable threshold, `SHIFCTRL_PULL_THRESH`, is reached, so the same program could also shift out e.g. 16 or 32 bits from each FIFO word.

Finally, note that the above program is not *exactly* the same as the original, since it stalls with the clock output low, rather than high. We can change the location of the stall, using the `PULL IFEMPTY` instruction, which uses the same configurable threshold as autopull:

```
1 .program somewhat_manual_pull
2 .side_set 1
3
4 .wrap_target
5     out pins, 1   side 0    [1]
6     pull ifempty  side 1    [1]
7 .wrap
```

Below is a complete example (PIO program, plus a C program to load and run it) which illustrates autopull and autopush both enabled on the same state machine. It programs state machine 0 to loopback data from the TX FIFO to the RX FIFO, with a throughput of one word per two clocks. It also demonstrates how the state machine will stall if it tries to `OUT` when both the OSR and TX FIFO are empty.

```
.program auto_push_pull

.wrap_target
    out x, 32
    in x, 32
.wrap
```

```
#include "tb.h" // TODO this is built against existing sw tree, so that we get printf etc

#include "platform.h"
#include "pio_regs.h"
#include "system.h"
#include "hardware.h"

#include "auto_push_pull.pio.h"

int main()
{
    tb_init();

    // Load program and configure state machine 0 for autopush/pull with
    // threshold of 32, and wrapping on program boundary. A threshold of 32 is
    // encoded by a register value of 00000.
    for (int i = 0; i < count_of(auto_push_pull_program); ++i)
        mm_pio->instr_mem[i] = auto_push_pull_program[i];
    mm_pio->sm[0].shiftctrl =
        (1u << PIO_SM0_SHIFTCTRL_AUTOPUSH_LSB) |
        (1u << PIO_SM0_SHIFTCTRL_AUTOPULL_LSB) |
        (0u << PIO_SM0_SHIFTCTRL_PUSH_THRESH_LSB) |
        (0u << PIO_SM0_SHIFTCTRL_PULL_THRESH_LSB);
    mm_pio->sm[0].execctrl =
        (auto_push_pull_wrap_target << PIO_SM0_EXECCTRL_WRAP_BOTTOM_LSB) |
        (auto_push_pull_wrap << PIO_SM0_EXECCTRL_WRAP_TOP_LSB);

    // Start state machine 0
    hw_set_bits(&mm_pio->ctrl, 1u << (PIO_CTRL_SM_ENABLE_LSB + 0));

    // Push data into TX FIFO, and pop from RX FIFO
    for (int i = 0; i < 5; ++i)
        mm_pio->txf[0] = i;
    for (int i = 0; i < 5; ++i)
        printf("%d\n", mm_pio->rxf[0]);

    return 0;
}
```

Figure 44 shows how the state machine executes the example program. Initially the OSR is empty, so the state machine stalls on the first `OUT` instruction. Once data is available in the TX FIFO, the state machine transfers this into the OSR. On the next cycle, the `OUT` can execute using the data in the OSR (in this case, transferring this data to the X scratch register), and the state machine simultaneously refills the OSR with fresh data from the FIFO. Since every `IN` instruction immediately fills the ISR, the ISR remains empty, and `IN` transfers data directly from scratch X to the RX FIFO.

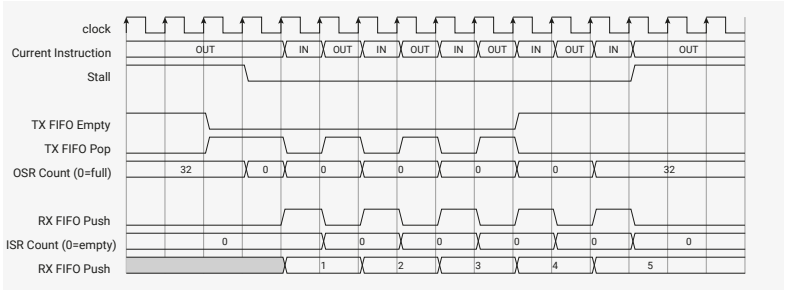

Figure 44. Execution of auto_push_pull program. The state machine stalls on an OUT until data has travelled through the TX FIFO into the OSR. Subsequently, the OSR is refilled simultaneously with each OUT operation (due to bit count of 32), and IN data bypasses the ISR and goes straight to the RX FIFO. The state machine stalls again when the FIFO has drained, and the OSR is once again empty.

To trigger automatic push or pull at the correct time, the state machine tracks the total shift count of the ISR and OSR, using a pair of saturating 6-bit counters.

- At reset, or upon `CTRL_SM_RESTART` assertion, ISR shift counter is set to 0 (nothing shifted in), and OSR to 32 (nothing left to be shifted out)
- An `OUT` instruction increases the OSR shift counter by `Bit count`
- An `IN` instruction increases the ISR shift counter by `Bit count`
- A `PULL` instruction or autopull clears the OSR counter to 0
- A `PUSH` instruction or autopush clears the ISR counter to 0
- A `MOV OSR, x` or `MOV ISR, x` clears the OSR or ISR shift counter to 0, respectively
- A `OUT ISR, n` instruction sets the ISR shift counter to `n`

On any `OUT` or `IN` instruction, the state machine compares the shift counters to the values of `SHIFTCTRL_PULL_THRESH` and `SHIFTCTRL_PUSH_THRESH` to decide whether action is required. Autopull and autopush are individually enabled by the `SHIFTCTRL_AUTOPULL` and `SHIFTCTRL_AUTOPUSH` fields.

3.5.4.1. Autopush Details

Pseudocode for an 'IN' with autopush enabled:

```
1 isr = shift_in(isr, input())
2 isr count = saturate(isr count + in count)
3
4 if rx count >= threshold:
5     if rx fifo is full:
6         stall
7     else:
8         push(isr)
9         isr = 0
10        isr count = 0
```

Note that the hardware performs the above steps in a single machine clock cycle (unless there is a stall).

Threshold is configurable from 1 to 32.

3.5.4.2. Autopull Details

On non-'OUT' cycles, the hardware performs the equivalent of the following pseudocode:

```
1 if MOV or PULL:
2     osr count = 0
3
4 if osr count >= threshold:
5     if tx fifo not empty:
6         osr = pull()
7         osr count = 0
```

An autopull can therefore occur at any point between two 'OUT' s, depending on when the data arrives in the FIFO.

On 'OUT' cycles, the sequence is a little different:

```
 1 if osr count >= threshold:
 2     if tx fifo not empty:
 3         osr = pull()
 4         osr count = 0
 5     stall
 6 else:
 7     output(osr)
 8     osr = shift(osr, out count)
 9     osr count = saturate(osr count + out count)
10
11     if osr count >= threshold:
12         if tx fifo not empty:
13             osr = pull()
14             osr count = 0
```

The hardware is capable of refilling the OSR simultaneously with shifting out the last of the shift data, as these two operations can proceed in parallel. However, it cannot fill an empty OSR and 'OUT' it on the same cycle, due to the long logic path this would create.

The refill is somewhat asynchronous to your program, but an 'OUT' behaves as a data fence, and the state machine will never 'OUT' data which you didn't write into the FIFO.

Note that a 'MOV' from the OSR is undefined whilst autopull is enabled; you will read either any residual data that has not been shifted out, or a fresh word from the FIFO, depending on a race against system DMA. Likewise, a 'MOV' to the OSR may overwrite data which has just been autopulled. However, data which you 'MOV' into the OSR will never be overwritten, since 'MOV' updates the shift counter.

If you **do** need to read the OSR contents, you should perform an explicit 'PULL' of some kind. The nondeterminism described above is the cost of the hardware managing pulls automatically. When autopull is enabled, the behaviour of 'PULL' is altered: it becomes a no-op if the OSR is full. This is to avoid a race condition against the system DMA. It behaves as a fence: either an autopull has already taken place, in which case the 'PULL' has no effect, or the program will stall on the 'PULL' until data becomes available in the FIFO.

'PUSH' does not need a similar behaviour, because autopush does not have the same nondeterminism.

3.5.5. Clock Dividers

PIO runs off the system clock, but this is simply too fast for many interfaces, and the number of `Delay` cycles which can be inserted is limited. Some devices, such as UART, require the signalling rate to be precisely controlled and varied, and ideally multiple state machines can be varied independently while running identical programs. Each state machine is equipped with a clock divider, for this purpose.

Rather than slowing the system clock itself, the clock divider redefines how many system clock periods are considered to be "one cycle", for execution purposes. It does this by generating a clock enable signal, which can pause and resume execution on a per-system-clock-cycle basis. The clock divider generates clock enable pulses at regular intervals, so

that the state machine runs at some steady pace, potentially much slower than the system clock.

Implementing the clock dividers in this way allows interfacing between the state machines and the system to be simpler, lower-latency, and with a smaller footprint. The state machine is completely idle on cycles where clock enable is low, though the system can still access the state machine's FIFOs and change its configuration.

The clock dividers are 16-bit integer, 8-bit fractional, with first-order delta-sigma for the fractional divider. The clock divisor can vary between 1 and 65536, in increments of $1 / 256$.

If the clock divisor is set to 1, the state machine runs on every cycle, i.e. full speed:

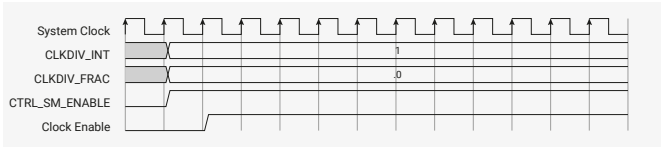

Figure 45. State machine operation with a clock divisor of 1. Once the state machine is enabled via the CTRL register, its clock enable is asserted on every cycle.

In general, an integer clock divisor of *n* will cause the state machine to run 1 cycle in every *n*, giving an effective clock speed of f_{sys} / n.

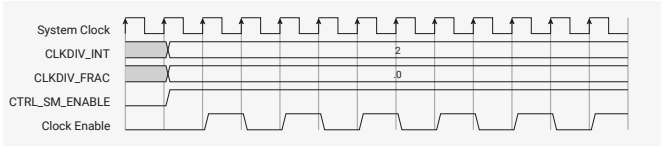

Figure 46. Integer clock divisors yield a periodic clock enable. The clock divider repeatedly counts down from n, and emits an enable pulse when it reaches 1.

Fractional division will maintain a steady state division rate of $n + f / 256$, where *n* and *f* are the integer and fractional fields of this state machine's `CLKDIV` register. It does this by selectively extending some division periods from n cycles to $n + 1$.

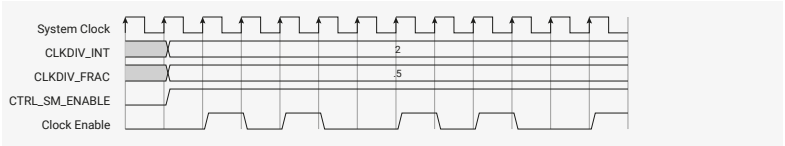

Figure 47. Fractional clock division with an average divisor of 2.5. The clock divider maintains a running total of the fractional value from each division period, and every time this value wraps through 1, the integer divisor is increased by one for the next division period.

For small *n*, the jitter introduced by a fractional divider may be unacceptable. However, for larger values, this effect is much less apparent.

NOTE

For fast asynchronous serial, it is recommended to use even divisions or multiples of 1 Mbaud where possible, rather than the traditional multiples of 300, to avoid unnecessary jitter.

3.5.6. GPIO Mapping

Internally, PIO has a 32-bit register for the output levels of each GPIO it can drive, and another register for the output enables (Hi/Lo-Z). On every system clock cycle, each state machine can write to some or all of the GPIOs in each of these registers.

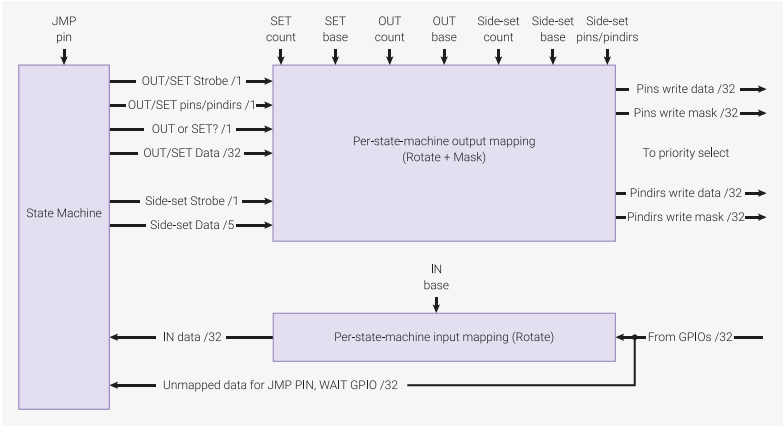

Figure 48. The state machine has two independent output channels, one shared by OUT/SET, and another used by side-set (which can happen at any time). Three independent mappings (first GPIO, number of GPIOs) control which GPIOs OUT, SET and side-set are directed to. Input data is rotated according to which GPIO is mapped to the LSB of the IN data.

The write data and write masks for the output level and output enable registers come from the following sources:

- An `OUT` instruction writes to up to 32 bits. Depending on the instruction's `Destination` field, this is applied to either pins or pindirs. The least-significant bit of `OUT` data is mapped to `PINCTRL_OUT_BASE`, and this mapping continues for `PINCTRL_OUT_COUNT` bits, wrapping after GPIO31.
- A `SET` instruction writes up to 5 bits. Depending on the instruction's `Destination` field, this is applied to either pins or pindirs. The least-significant bit of `SET` data is mapped to `PINCTRL_SET_BASE`, and this mapping continues for `PINCTRL_SET_COUNT` bits, wrapping after GPIO31.
- A side-set operation writes up to 5 bits. Depending on the register field `EXECCTRL_SIDE_PINDIR`, this is applied to either pins or pindirs. The least-significant bit of side-set data is mapped to `PINCTRL_SIDESET_BASE`, continuing for `PINCTRL_SIDESET_COUNT` pins, minus one if `EXECCTRL_SIDE_EN` is set.

Each `OUT`/`SET`/side-set operation writes to a contiguous range of pins, but each of these ranges is independently sized and positioned in the 32-bit GPIO space. This is sufficiently flexible for many applications. For example, if one state machine is implementing some interface such as an SPI on a group of pins, another state machine can run the same program, mapped to a different group of pins, and provide a second SPI interface.

On any given clock cycle, the state machine may perform an `OUT` or a `SET`, and may simultaneously perform a side-set. The pin mapping logic generates a 32-bit write mask and write data bus for the output level and output enable registers, based on this request, and the pin mapping configuration.

If a side-set overlaps with an `OUT`/`SET` performed by that state machine on the same cycle, the side-set takes precedence in the overlapping region.

3.5.6.1. Output Priority

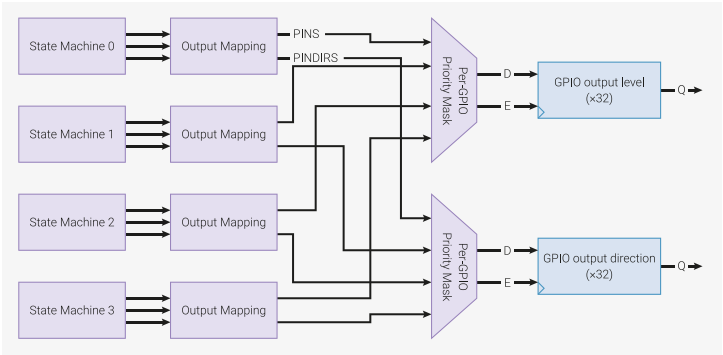

Figure 49. Per-GPIO priority select of write masks from each state machine. Each GPIO considers level and direction writes from each of the four state machines, and applies the value from the highest-numbered state machine.

Each state machine may assert an `OUT`/`SET` and a side-set through its pin mapping hardware on each cycle. This generates 32 bits of write data and write mask for the GPIO output level and output enable registers, from each state machine.

For each GPIO, PIO collates the writes from all four state machines, and applies the write from the highest-numbered

state machine. This occurs separately for output levels and output directions — it is possible for a state machine to change both the level and direction of the same pin on the same cycle (e.g. via simultaneous SET and side-set), or for one state machine to change a GPIO's direction while another changes that GPIO's level. If no state machine asserts a write to a GPIO's level or direction, the value does not change.

There is a register stage between each state machine and the pin mapping logic, and a register stage between the input mapping logic and each state machine. Assuming zero propagation delay, a state machine observing its own outputs is subject to the following delays:

- when bypassing synchronisers, a two-cycle delay
- when synchronisers are engaged, a four-cycle delay

3.5.6.2. Input Mapping

The data observed by IN instructions is mapped such that the LSB is the GPIO selected by PINCTRL_IN_BASE, and successively more-significant bits come from successively higher-numbered GPIOs, wrapping after 31.

In other words, the IN bus is a right-rotate of the GPIO input values, by PINCTRL_IN_BASE. If fewer than 32 GPIOs are present, the PIO input is padded with zeroes up to 32 bits.

Some instructions, such as WAIT GPIO, use an absolute GPIO number, rather than an index into the IN data bus. In this case, the right-rotate is not applied.

3.5.6.3. Input Synchronisers

To protect PIO from metastabilities, each GPIO input is equipped with a standard 2-flipflop synchroniser. This adds two cycles of latency to input sampling, but the benefit is that state machines can perform an IN PINS at any point, and will see only a clean high or low level, not some intermediate value that could disturb the state machine circuitry. This is absolutely necessary for asynchronous interfaces such as UART RX.

It is possible to bypass these synchronisers, on a per-GPIO basis. This reduces input latency, but it is then up to the user to guarantee that the state machine does not sample its inputs at inappropriate times. Generally this is only possible for synchronous interfaces such as SPI. Synchronisers are bypassed by setting the corresponding bit in INPUT_SYNC_BYPASS.

WARNING

Sampling a metastable input can lead to unpredictable state machine behaviour. This should be avoided. Do not disable the synchronizers unless data applied to the pins meets setup and hold times relative to CLK_SYS.

3.5.7. Forced and EXEC'd Instructions

Besides the instruction memory, state machines can execute instructions from 3 other sources:

- MOV EXEC which executes an instruction from some register Source
- OUT EXEC which executes data shifted out from the OSR
- The SMx_INSTR control registers, to which the system can write instructions for immediate execution

```
1 .program exec_example
2
3 hang:
4     jmp hang
5 execute:
6     out exec, 32
7     jmp execute
8
```

```
.program instructions_to_push

    out x, 32
    in x, 32
    push
```

```
#include "tb.h" // TODO this is built against existing sw tree, so that we get printf etc

#include "platform.h"
#include "pio_regs.h"
#include "system.h"
#include "hardware.h"

#include "exec_example.pio.h"

int main()
{
    tb_init();

    for (int i = 0; i < count_of(exec_example_program); ++i)
        mm_pio->instr_mem[i] = exec_example_program[i];

    // Enable autopull, threshold of 32
    mm_pio->sm[0].shiftctrl = (1u << PIO_SM0_SHIFTCTRL_AUTOPULL_LSB);

    // Start state machine 0 -- will sit in "hang" loop
    hw_set_bits(&mm_pio->ctrl, 1u << (PIO_CTRL_SM_ENABLE_LSB + 0));

    // Force a jump to program location 1
    mm_pio->sm[0].instr = 0x0000 | 0x1; // jmp execute

    // Feed a mixture of instructions and data into FIFO
    mm_pio->txf[0] = instructions_to_push_program[0]; // out x, 32
    mm_pio->txf[0] = 12345678;                        // data to be OUTed
    mm_pio->txf[0] = instructions_to_push_program[1]; // in x, 32
    mm_pio->txf[0] = instructions_to_push_program[2]; // push

    // The program pushed into TX FIFO will return some data in RX FIFO
    while (mm_pio->fstat & (1u << PIO_FSTAT_RXEMPTY_LSB))
        ;

    printf("%d\n", mm_pio->rxf[0]);

    return 0;
}
```

Here we load an example program into the state machine, which does two things:

- Enters an infinite loop
- Enters a loop which repeatedly pulls 32 bits of data from the TX FIFO, and executes the lower 16 bits as an instruction

The C program sets the state machine running, at which point it enters the `hang` loop. While the state machine is still running, the C program forces in a `jmp` instruction, which causes the state machine to break out of the loop.

When an instruction is written to the `INSTR` register, the state machine immediately decodes and executes that instruction, rather than the instruction it would have fetched from the PIO's instruction memory. The program counter does not advance, so on the next cycle (assuming the instruction forced into the `INSTR` interface did not stall) the state machine continues to execute its current program from the point where it left off, unless the written instruction itself

manipulated PC.

Delay cycles are ignored on instructions written to the INSTR register, and execute immediately, ignoring the state machine clock divider. This interface is provided for performing initial setup and effecting control flow changes, so it executes instructions in a timely manner, no matter how the state machine is configured.

Instructions written to the INSTR register are permitted to stall, in which case the state machine will latch this instruction internally until it completes. This is signified by the EXECCTRL_EXEC_STALLED flag. This can be cleared by restarting the state machine, or writing a NOP to INSTR.

In the second phase of the example state machine program, the OUT EXEC instruction is used. The OUT itself occupies one execution cycle, and the instruction which the OUT executes is on the next execution cycle. Note that one of the instructions we execute is also an OUT — the state machine is only capable of executing one OUT instruction on any given cycle.

OUT EXEC works by writing the OUT shift data to an internal instruction latch. On the next cycle, the state machine remembers it must execute from this latch rather than the instruction memory, and also knows to not advance PC on this second cycle.

This program will print "12345678" when run.

CAUTION

If an instruction written to INSTR stalls, it is stored in the same instruction latch used by OUT EXEC and MOV EXEC, and will overwrite an in-progress instruction there. If EXEC instructions are used, instructions written to INSTR must not stall.

3.6. Examples

These examples illustrate some of PIO's hardware features, by implementing common I/O interfaces.

Looking to get started?

The **Raspberry Pi Pico-series C/C++ SDK** book has a comprehensive PIO chapter, which walks through writing and building a first PIO application, and goes on to walk through some programs line-by-line. It also covers broader topics such as using PIO with DMA, and goes into much more depth on how PIO can be integrated into your software.

3.6.1. Duplex SPI

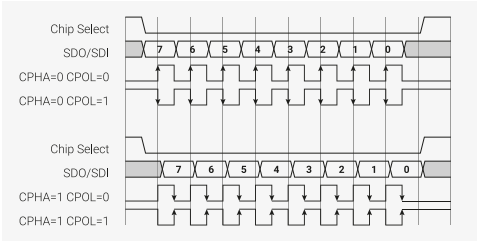

Figure 50. In SPI, a host and device exchange data over a bidirectional pair of serial data lines, synchronous with a clock (SCK). Two flags, CPOL and CPHA, specify the clock's behaviour. CPOL is the idle state of the clock: 0 for low, 1 for high. The clock pulses a number of times, transferring one bit in each direction per pulse, but always returns to its idle state. CPHA determines on which edge of the clock data is captured: 0 for leading edge, and 1 for trailing edge. The arrows in the figure show the clock edge where data is captured by both the host and device.

SPI is a common serial interface with a twisty history. The following program implements full-duplex (i.e. transferring data in both directions simultaneously) SPI, with a CPHA parameter of 0.

Pico Examples: https://github.com/raspberrypi/pico-examples/blob/master/pio/spi/spi.pio Lines 14 - 32

```
14 .program spi_cpha0
15 .side_set 1
16
17 ; Pin assignments:
18 ; - SCK is side-set pin 0
19 ; - MOSI is OUT pin 0
20 ; - MISO is IN pin 0
21 ;
22 ; Autopush and autopull must be enabled, and the serial frame size is set by
23 ; configuring the push/pull threshold. Shift left/right is fine, but you must
24 ; justify the data yourself. This is done most conveniently for frame sizes of
25 ; 8 or 16 bits by using the narrow store replication and narrow load byte
26 ; picking behaviour of RP2040's IO fabric.
27
28 ; Clock phase = 0: data is captured on the leading edge of each SCK pulse, and
29 ; transitions on the trailing edge, or some time before the first leading edge.
30
31     out pins, 1 side 0 [1] ; Stall here on empty (sideset proceeds even if
32     in pins, 1  side 1 [1] ; instruction stalls, so we stall with SCK low)
```

This code uses autopush and autopull to continuously stream data from the FIFOs. The entire program runs once for every bit that is transferred, and then loops. The state machine tracks how many bits have been shifted in/out, and automatically pushes/pulls the FIFOs at the correct point. A similar program handles the CPHA=1 case:

Pico Examples: https://github.com/raspberrypi/pico-examples/blob/master/pio/spi/spi.pio Lines 34 - 42

```
34 .program spi_cpha1
35 .side_set 1
36
37 ; Clock phase = 1: data transitions on the leading edge of each SCK pulse, and
38 ; is captured on the trailing edge.
39
40     out x, 1    side 0     ; Stall here on empty (keep SCK deasserted)
41     mov pins, x side 1 [1] ; Output data, assert SCK (mov pins uses OUT mapping)
42     in pins, 1  side 0     ; Input data, deassert SCK
```

NOTE

These programs do not control the chip select line; chip select is often implemented as a software-controlled GPIO, due to wildly different behaviour between different SPI hardware. The full `spi.pio` source linked above contains some examples how PIO can implement a hardware chip select line.

A C helper function configures the state machine, connects the GPIOs, and sets the state machine running. Note that the SPI frame size — that is, the number of bits transferred for each FIFO record — can be programmed to any value from 1 to 32, without modifying the program. Once configured, the state machine is set running.

Pico Examples: https://github.com/raspberrypi/pico-examples/blob/master/pio/spi/spi.pio Lines 46 - 72

```
46 static inline void pio_spi_init(PIO pio, uint sm, uint prog_offs, uint n_bits,
47         float clkdiv, bool cpha, bool cpol, uint pin_sck, uint pin_mosi, uint pin_miso) {
48     pio_sm_config c = cpha ? spi_cpha1_program_get_default_config(prog_offs) :
   spi_cpha0_program_get_default_config(prog_offs);
49     sm_config_set_out_pins(&c, pin_mosi, 1);
50     sm_config_set_in_pins(&c, pin_miso);
51     sm_config_set_sideset_pins(&c, pin_sck);
52     // Only support MSB-first in this example code (shift to left, auto push/pull,
   threshold=nbits)
53     sm_config_set_out_shift(&c, false, true, n_bits);
54     sm_config_set_in_shift(&c, false, true, n_bits);
55     sm_config_set_clkdiv(&c, clkdiv);
56
57     // MOSI, SCK output are low, MISO is input
58     pio_sm_set_pins_with_mask(pio, sm, 0, (1u << pin_sck) | (1u << pin_mosi));
59     pio_sm_set_pindirs_with_mask(pio, sm, (1u << pin_sck) | (1u << pin_mosi), (1u << pin_sck)
   | (1u << pin_mosi) | (1u << pin_miso));
60     pio_gpio_init(pio, pin_mosi);
61     pio_gpio_init(pio, pin_miso);
62     pio_gpio_init(pio, pin_sck);
63
64     // The pin muxes can be configured to invert the output (among other things
65     // and this is a cheesy way to get CPOL=1
66     gpio_set_outover(pin_sck, cpol ? GPIO_OVERRIDE_INVERT : GPIO_OVERRIDE_NORMAL);
67     // SPI is synchronous, so bypass input synchroniser to reduce input delay.
68     hw_set_bits(&pio->input_sync_bypass, 1u << pin_miso);
69
70     pio_sm_init(pio, sm, prog_offs, &c);
71     pio_sm_set_enabled(pio, sm, true);
72 }
```

The state machine will now immediately begin to shift out any data appearing in the TX FIFO, and push received data into the RX FIFO.

Pico Examples: https://github.com/raspberrypi/pico-examples/blob/master/pio/spi/pio_spi.c Lines 18 - 34

```
18 void __time_critical_func(pio_spi_write8_blocking)(const pio_spi_inst_t *spi, const uint8_t
   *src, size_t len) {
19     size_t tx_remain = len, rx_remain = len;
20     // Do 8 bit accesses on FIFO, so that write data is byte-replicated. This
21     // gets us the left-justification for free (for MSB-first shift-out)
22     io_rw_8 *txfifo = (io_rw_8 *) &spi->pio->txf[spi->sm];
23     io_rw_8 *rxfifo = (io_rw_8 *) &spi->pio->rxf[spi->sm];
24     while (tx_remain || rx_remain) {
25         if (tx_remain && !pio_sm_is_tx_fifo_full(spi->pio, spi->sm)) {
26             *txfifo = *src++;
27             --tx_remain;
28         }
```

```
        if (rx_remain && !pio_sm_is_rx_fifo_empty(spi->pio, spi->sm)) {
            (void) *rxfifo;
            --rx_remain;
        }
    }
}
```

Putting this all together, this complete C program will loop back some data through a PIO SPI at 1MHz, with all four CPOL/CPHA combinations:

Pico Examples: https://github.com/raspberrypi/pico-examples/blob/master/pio/spi/spi_loopback.c

```
/**
 * Copyright (c) 2020 Raspberry Pi (Trading) Ltd.
 *
 * SPDX-License-Identifier: BSD-3-Clause
 */

#include <stdlib.h>
#include <stdio.h>

#include "pico/stdlib.h"
#include "pio_spi.h"

// This program instantiates a PIO SPI with each of the four possible
// CPOL/CPHA combinations, with the serial input and output pin mapped to the
// same GPIO. Any data written into the state machine's TX FIFO should then be
// serialised, deserialised, and reappear in the state machine's RX FIFO.

#define PIN_SCK 18
#define PIN_MOSI 16
#define PIN_MISO 16 // same as MOSI, so we get loopback

#define BUF_SIZE 20

void test(const pio_spi_inst_t *spi) {
    static uint8_t txbuf[BUF_SIZE];
    static uint8_t rxbuf[BUF_SIZE];
    printf("TX:");
    for (int i = 0; i < BUF_SIZE; ++i) {
        txbuf[i] = rand() >> 16;
        rxbuf[i] = 0;
        printf(" %02x", (int) txbuf[i]);
    }
    printf("\n");

    pio_spi_write8_read8_blocking(spi, txbuf, rxbuf, BUF_SIZE);

    printf("RX:");
    bool mismatch = false;
    for (int i = 0; i < BUF_SIZE; ++i) {
        printf(" %02x", (int) rxbuf[i]);
        mismatch = mismatch || rxbuf[i] != txbuf[i];
    }
    if (mismatch)
        printf("\nNope\n");
    else
        printf("\nOK\n");
}

int main() {
    stdio_init_all();
```

```
51
52      pio_spi_inst_t spi = {
53              .pio = pio0,
54              .sm = 0
55      };
56      float clkdiv = 31.25f;  // 1 MHz @ 125 clk_sys
57      uint cpha0_prog_offs = pio_add_program(spi.pio, &spi_cpha0_program);
58      uint cpha1_prog_offs = pio_add_program(spi.pio, &spi_cpha1_program);
59
60      for (int cpha = 0; cpha <= 1; ++cpha) {
61          for (int cpol = 0; cpol <= 1; ++cpol) {
62              printf("CPHA = %d, CPOL = %d\n", cpha, cpol);
63              pio_spi_init(spi.pio, spi.sm,
64                           cpha ? cpha1_prog_offs : cpha0_prog_offs,
65                           8,       // 8 bits per SPI frame
66                           clkdiv,
67                           cpha,
68                           cpol,
69                           PIN_SCK,
70                           PIN_MOSI,
71                           PIN_MISO
72              );
73              test(&spi);
74              sleep_ms(10);
75          }
76      }
77 }
```

3.6.2. WS2812 LEDs

WS2812 LEDs are driven by a proprietary pulse-width serial format, with a wide positive pulse representing a "1" bit, and narrow positive pulse a "0". Each LED has a serial input and a serial output; LEDs are connected in a chain, with each serial input connected to the previous LED's serial output.

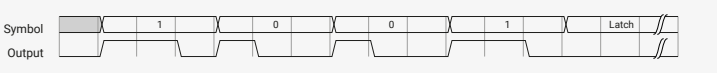

Figure 51. WS2812 line format. Wide positive pulse for 1, narrow positive pulse for 0, very long negative pulse for latch enable

LEDs consume 24 bits of pixel data, then pass any additional input data on to their output. In this way a single serial burst can individually program the colour of each LED in a chain. A long negative pulse latches the pixel data into the LEDs.

Pico Examples: https://github.com/raspberrypi/pico-examples/blob/master/pio/ws2812/ws2812.pio Lines 8 - 31

```
 8 .program ws2812
 9 .side_set 1
10
11 ; The following constants are selected for broad compatibility with WS2812,
12 ; WS2812B, and SK6812 LEDs. Other constants may support higher bandwidths for
13 ; specific LEDs, such as (7,10,8) for WS2812B LEDs.
14
15 .define public T1 3
16 .define public T2 3
17 .define public T3 4
18
19 .lang_opt python sideset_init = pico.PIO.OUT_HIGH
20 .lang_opt python out_init     = pico.PIO.OUT_HIGH
21 .lang_opt python out_shiftdir = 1
22
23 .wrap_target
```

```
24 bitloop:
25     out x, 1       side 0 [T3 - 1] ; Side-set still takes place when instruction stalls
26     jmp !x do_zero side 1 [T1 - 1] ; Branch on the bit we shifted out. Positive pulse
27 do_one:
28     jmp  bitloop   side 1 [T2 - 1] ; Continue driving high, for a long pulse
29 do_zero:
30     nop            side 0 [T2 - 1] ; Or drive low, for a short pulse
31 .wrap
```

This program shifts bits from the OSR into X, and produces a wide or narrow pulse on side-set pin 0, based on the value of each data bit. Autopull must be configured, with a threshold of 24. Software can then write 24-bit pixel values into the FIFO, and these will be serialised to a chain of WS2812 LEDs. The `.pio` file contains a C helper function to set this up:

Pico Examples: https://github.com/raspberrypi/pico-examples/blob/master/pio/ws2812/ws2812.pio Lines 36 - 52

```
36 static inline void ws2812_program_init(PIO pio, uint sm, uint offset, uint pin, float freq,
   bool rgbw) {
37
38     pio_gpio_init(pio, pin);
39     pio_sm_set_consecutive_pindirs(pio, sm, pin, 1, true);
40
41     pio_sm_config c = ws2812_program_get_default_config(offset);
42     sm_config_set_sideset_pins(&c, pin);
43     sm_config_set_out_shift(&c, false, true, rgbw ? 32 : 24);
44     sm_config_set_fifo_join(&c, PIO_FIFO_JOIN_TX);
45
46     int cycles_per_bit = ws2812_T1 + ws2812_T2 + ws2812_T3;
47     float div = clock_get_hz(clk_sys) / (freq * cycles_per_bit);
48     sm_config_set_clkdiv(&c, div);
49
50     pio_sm_init(pio, sm, offset, &c);
51     pio_sm_set_enabled(pio, sm, true);
52 }
```

Because the shift is MSB-first, and our pixels aren't a power of two size (so we can't rely on the narrow write replication behaviour on RP2040 to fan out the bits for us), we need to preshift the values written to the TX FIFO.

Pico Examples: https://github.com/raspberrypi/pico-examples/blob/master/pio/ws2812/ws2812.c Lines 43 - 45

```
43 static inline void put_pixel(PIO pio, uint sm, uint32_t pixel_grb) {
44     pio_sm_put_blocking(pio, sm, pixel_grb << 8u);
45 }
```

To DMA the pixels, we could instead set the autopull threshold to 8 bits, set the DMA transfer size to 8 bits, and write a byte at a time into the FIFO. Each pixel would be 3 one-byte transfers. Because of how the bus fabric and DMA on RP2040 work, each byte the DMA transfers will appear replicated four times when written to a 32-bit IO register, so effectively your data is at *both ends* of the shift register, and you can shift in either direction without worry.

More detail?

The WS2812 example is the subject of a tutorial in the **Raspberry Pi Pico-series C/C++ SDK** document, in the PIO chapter. The tutorial dissects the `ws2812` program line by line, traces through how the program executes, and shows wave diagrams of the GPIO output at every point in the program.

3.6.3. UART TX

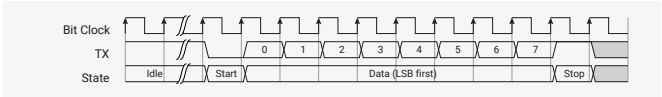

Figure 52. UART serial format. The line is high when idle. The transmitter pulls the line down for one bit period to signify the start of a serial frame (the "start bit"), and a small, fixed number of data bits follows. The line returns to the idle state for at least one bit period (the "stop bit") before the next serial frame can begin.

This program implements the transmit component of a universal asynchronous receive/transmit (UART) serial peripheral. Perhaps it would be more correct to refer to this as a UAT.

Pico Examples: https://github.com/raspberrypi/pico-examples/blob/master/pio/uart_tx/uart_tx.pio Lines 8 - 18

```
 8 .program uart_tx
 9 .side_set 1 opt
10
11 ; An 8n1 UART transmit program.
12 ; OUT pin 0 and side-set pin 0 are both mapped to UART TX pin.
13
14     pull       side 1 [7]  ; Assert stop bit, or stall with line in idle state
15     set x, 7   side 0 [7]  ; Preload bit counter, assert start bit for 8 clocks
16 bitloop:                   ; This loop will run 8 times (8n1 UART)
17     out pins, 1            ; Shift 1 bit from OSR to the first OUT pin
18     jmp x-- bitloop   [6]  ; Each loop iteration is 8 cycles.
```

As written, it will:

- Stall with the pin driven high until data appears (noting that side-set takes effect even when the state machine is stalled)
- Assert a start bit, for 8 SM execution cycles
- Shift out 8 data bits, each lasting for 8 cycles
- Return to the idle line state for at least 8 cycles before asserting the next start bit

If the state machine's clock divider is configured to run at 8 times the desired baud rate, this program will transmit well-formed UART serial frames, whenever data is pushed to the TX FIFO either by software or the system DMA. To extend the program to cover different frame sizes (different numbers of data bits), the `set x, 7` could be replaced with `mov x, y`, so that the `y` scratch register becomes a per-SM configuration register for UART frame size.

The `.pio` file in the SDK also contains this function, for configuring the pins and the state machine, once the program has been loaded into the PIO instruction memory:

Pico Examples: https://github.com/raspberrypi/pico-examples/blob/master/pio/uart_tx/uart_tx.pio Lines 24 - 51

```
24 static inline void uart_tx_program_init(PIO pio, uint sm, uint offset, uint pin_tx, uint
   baud) {
25     // Tell PIO to initially drive output-high on the selected pin, then map PIO
26     // onto that pin with the IO muxes.
27     pio_sm_set_pins_with_mask64(pio, sm, 1ull << pin_tx, 1ull << pin_tx);
28     pio_sm_set_pindirs_with_mask64(pio, sm, 1ull << pin_tx, 1ull << pin_tx);
29     pio_gpio_init(pio, pin_tx);
30
31     pio_sm_config c = uart_tx_program_get_default_config(offset);
32
33     // OUT shifts to right, no autopull
34     sm_config_set_out_shift(&c, true, false, 32);
35
36     // We are mapping both OUT and side-set to the same pin, because sometimes
37     // we need to assert user data onto the pin (with OUT) and sometimes
38     // assert constant values (start/stop bit)
39     sm_config_set_out_pins(&c, pin_tx, 1);
40     sm_config_set_sideset_pins(&c, pin_tx);
```

```
41
42     // We only need TX, so get an 8-deep FIFO!
43     sm_config_set_fifo_join(&c, PIO_FIFO_JOIN_TX);
44
45     // SM transmits 1 bit per 8 execution cycles.
46     float div = (float)clock_get_hz(clk_sys) / (8 * baud);
47     sm_config_set_clkdiv(&c, div);
48
49     pio_sm_init(pio, sm, offset, &c);
50     pio_sm_set_enabled(pio, sm, true);
51 }
```

The state machine is configured to shift right in `out` instructions, because UARTs typically send data LSB-first. Once configured, the state machine will print any characters pushed to the TX FIFO.

Pico Examples: https://github.com/raspberrypi/pico-examples/blob/master/pio/uart_tx/uart_tx.pio Lines 53 - 55

```
53 static inline void uart_tx_program_putc(PIO pio, uint sm, char c) {
54     pio_sm_put_blocking(pio, sm, (uint32_t)c);
55 }
```

Pico Examples: https://github.com/raspberrypi/pico-examples/blob/master/pio/uart_tx/uart_tx.pio Lines 57 - 60

```
57 static inline void uart_tx_program_puts(PIO pio, uint sm, const char *s) {
58     while (*s)
59         uart_tx_program_putc(pio, sm, *s++);
60 }
```

The example program in the SDK will configure one PIO state machine as a UART TX peripheral, and use it to print a message on GPIO 0 at 115200 baud once per second.

Pico Examples: https://github.com/raspberrypi/pico-examples/blob/master/pio/uart_tx/uart_tx.c

```
 1 /**
 2  * Copyright (c) 2020 Raspberry Pi (Trading) Ltd.
 3  *
 4  * SPDX-License-Identifier: BSD-3-Clause
 5  */
 6
 7 #include "pico/stdlib.h"
 8 #include "hardware/pio.h"
 9 #include "uart_tx.pio.h"
10
11 // We're going to use PIO to print "Hello, world!" on the same GPIO which we
12 // normally attach UART0 to.
13 #define PIO_TX_PIN 0
14
15 // Check the pin is compatible with the platform
16 #error Attempting to use a pin>=32 on a platform that does not support it
17
18 int main() {
19     // This is the same as the default UART baud rate on Pico
20     const uint SERIAL_BAUD = 115200;
21
22     PIO pio;
23     uint sm;
24     uint offset;
25
```

```
26     // This will find a free pio and state machine for our program and load it for us
27     // We use pio_claim_free_sm_and_add_program_for_gpio_range (for_gpio_range variant)
28     // so we will get a PIO instance suitable for addressing gpios >= 32 if needed and
   supported by the hardware
29     bool success = pio_claim_free_sm_and_add_program_for_gpio_range(&uart_tx_program, &pio,
   &sm, &offset, PIO_TX_PIN, 1, true);
30     hard_assert(success);
31
32     uart_tx_program_init(pio, sm, offset, PIO_TX_PIN, SERIAL_BAUD);
33
34     while (true) {
35         uart_tx_program_puts(pio, sm, "Hello, world! (from PIO!)\r\n");
36         sleep_ms(1000);
37     }
38
39     // This will free resources and unload our program
40     pio_remove_program_and_unclaim_sm(&uart_tx_program, pio, sm, offset);
41 }
```

With the two PIO instances on RP2040, this could be extended to 8 additional UART TX interfaces, on 8 different pins, with 8 different baud rates.

3.6.4. UART RX

Recalling Figure 52 showing the format of an 8n1 UART:

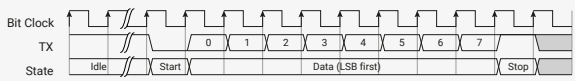

We can recover the data by waiting for the start bit, sampling 8 times with the correct timing, and pushing the result to the RX FIFO. Below is possibly the shortest program which can do this:

Pico Examples: https://github.com/raspberrypi/pico-examples/blob/master/pio/uart_rx/uart_rx.pio Lines 8 - 19

```
 8 .program uart_rx_mini
 9
10 ; Minimum viable 8n1 UART receiver. Wait for the start bit, then sample 8 bits
11 ; with the correct timing.
12 ; IN pin 0 is mapped to the GPIO used as UART RX.
13 ; Autopush must be enabled, with a threshold of 8.
14
15     wait 0 pin 0        ; Wait for start bit
16     set x, 7 [10]       ; Preload bit counter, delay until eye of first data bit
17 bitloop:                ; Loop 8 times
18     in pins, 1          ; Sample data
19     jmp x-- bitloop [6] ; Each iteration is 8 cycles
```

This works, but it has some annoying characteristics, like repeatedly outputting `NUL` characters if the line is stuck low. Ideally, we would want to drop data that is not correctly framed by a start and stop bit (and set some sticky flag to indicate this has happened), and pause receiving when the line is stuck low for long periods. We can add these to our program, at the cost of a few more instructions.

Pico Examples: https://github.com/raspberrypi/pico-examples/blob/master/pio/uart_rx/uart_rx.pio Lines 44 - 63

```
44 .program uart_rx
45
46 ; Slightly more fleshed-out 8n1 UART receiver which handles framing errors and
```

```
47 ; break conditions more gracefully.
48 ; IN pin 0 and JMP pin are both mapped to the GPIO used as UART RX.
49
50 start:
51     wait 0 pin 0        ; Stall until start bit is asserted
52     set x, 7    [10]    ; Preload bit counter, then delay until halfway through
53 bitloop:                ; the first data bit (12 cycles incl wait, set).
54     in pins, 1          ; Shift data bit into ISR
55     jmp x-- bitloop [6] ; Loop 8 times, each loop iteration is 8 cycles
56     jmp pin good_stop   ; Check stop bit (should be high)
57
58     irq 4 rel           ; Either a framing error or a break. Set a sticky flag,
59     wait 1 pin 0        ; and wait for line to return to idle state.
60     jmp start           ; Don't push data if we didn't see good framing.
61
62 good_stop:             ; No delay before returning to start; a little slack is
63     push                ; important in case the TX clock is slightly too fast.
```

The second example does not use autopush (Section 3.5.4), preferring instead to use an explicit `push` instruction, so that it can condition the push on whether a correct stop bit is seen. The `.pio` file includes a helper function which configures the state machine and connects it to a GPIO with the pull-up enabled:

Pico Examples: https://github.com/raspberrypi/pico-examples/blob/master/pio/uart_rx/uart_rx.pio Lines 67 - 85

```
67 static inline void uart_rx_program_init(PIO pio, uint sm, uint offset, uint pin, uint baud) {
68     pio_sm_set_consecutive_pindirs(pio, sm, pin, 1, false);
69     pio_gpio_init(pio, pin);
70     gpio_pull_up(pin);
71
72     pio_sm_config c = uart_rx_program_get_default_config(offset);
73     sm_config_set_in_pins(&c, pin); // for WAIT, IN
74     sm_config_set_jmp_pin(&c, pin); // for JMP
75     // Shift to right, autopush disabled
76     sm_config_set_in_shift(&c, true, false, 32);
77     // Deeper FIFO as we're not doing any TX
78     sm_config_set_fifo_join(&c, PIO_FIFO_JOIN_RX);
79     // SM transmits 1 bit per 8 execution cycles.
80     float div = (float)clock_get_hz(clk_sys) / (8 * baud);
81     sm_config_set_clkdiv(&c, div);
82
83     pio_sm_init(pio, sm, offset, &c);
84     pio_sm_set_enabled(pio, sm, true);
85 }
```

To correctly receive data which is sent LSB-first, the ISR is configured to shift to the right. After shifting in 8 bits, this unfortunately leaves our 8 data bits in bits 31:24 of the ISR, with 24 zeroes in the LSBs. One option here is an `in null, 24` instruction to shuffle the ISR contents down to 7:0. Another is to read from the FIFO at an offset of 3 bytes, with an 8-bit read, so that the processor's bus hardware (or the DMA's) picks out the relevant byte for free:

Pico Examples: https://github.com/raspberrypi/pico-examples/blob/master/pio/uart_rx/uart_rx.pio Lines 87 - 93

```
87 static inline char uart_rx_program_getc(PIO pio, uint sm) {
88     // 8-bit read from the uppermost byte of the FIFO, as data is left-justified
89     io_rw_8 *rxfifo_shift = (io_rw_8*)&pio->rxf[sm] + 3;
90     while (pio_sm_is_rx_fifo_empty(pio, sm))
91         tight_loop_contents();
92     return (char)*rxfifo_shift;
93 }
```

An example program shows how this UART RX program can be used to receive characters sent by one of the hardware UARTs on RP2040. A wire must be connected from GPIO4 to GPIO3 for this program to function. To make the wrangling of 3 different serial ports a little easier, this program uses core 1 to print out a string on the test UART (UART 1), and the code running on core 0 will pull out characters from the PIO state machine, and pass them along to the UART used for the debug console (UART 0). Another approach here would be interrupt-based IO, using PIO's FIFO IRQs. If the `SM0_RXNEMPTY` bit is set in the `IRQ0_INTE` register, then PIO will raise its first interrupt request line whenever there is a character in state machine 0's RX FIFO.

Pico Examples: https://github.com/raspberrypi/pico-examples/blob/master/pio/uart_rx/uart_rx.c

```
/**
 * Copyright (c) 2020 Raspberry Pi (Trading) Ltd.
 *
 * SPDX-License-Identifier: BSD-3-Clause
 */

#include <stdio.h>

#include "pico/stdlib.h"
#include "pico/multicore.h"
#include "hardware/pio.h"
#include "hardware/uart.h"
#include "uart_rx.pio.h"

// This program
// - Uses UART1 (the spare UART, by default) to transmit some text
// - Uses a PIO state machine to receive that text
// - Prints out the received text to the default console (UART0)
// This might require some reconfiguration on boards where UART1 is the
// default UART.

#define SERIAL_BAUD PICO_DEFAULT_UART_BAUD_RATE
#define HARD_UART_INST uart1

// You'll need a wire from GPIO4 -> GPIO3
#define HARD_UART_TX_PIN 4
#define PIO_RX_PIN 3

// Check the pin is compatible with the platform
#error Attempting to use a pin>=32 on a platform that does not support it

// Ask core 1 to print a string, to make things easier on core 0
void core1_main() {
    const char *s = (const char *) multicore_fifo_pop_blocking();
    uart_puts(HARD_UART_INST, s);
}

int main() {
    // Console output (also a UART, yes it's confusing)
    setup_default_uart();
    printf("Starting PIO UART RX example\n");

    // Set up the hard UART we're going to use to print characters
    uart_init(HARD_UART_INST, SERIAL_BAUD);
    gpio_set_function(HARD_UART_TX_PIN, GPIO_FUNC_UART);

    // Set up the state machine we're going to use to receive them.
    PIO pio;
    uint sm;
    uint offset;

    // This will find a free pio and state machine for our program and load it for us
```

```
53     // We use pio_claim_free_sm_and_add_program_for_gpio_range (for_gpio_range variant)
54     // so we will get a PIO instance suitable for addressing gpios >= 32 if needed and
   supported by the hardware
55     bool success = pio_claim_free_sm_and_add_program_for_gpio_range(&uart_rx_program, &pio,
   &sm, &offset, PIO_RX_PIN, 1, true);
56     hard_assert(success);
57
58     uart_rx_program_init(pio, sm, offset, PIO_RX_PIN, SERIAL_BAUD);
59     //uart_rx_mini_program_init(pio, sm, offset, PIO_RX_PIN, SERIAL_BAUD);
60
61     // Tell core 1 to print some text to uart1 as fast as it can
62     multicore_launch_core1(core1_main);
63     const char *text = "Hello, world from PIO! (Plus 2 UARTs and 2 cores, for complex
   reasons)\n";
64     multicore_fifo_push_blocking((uint32_t) text);
65
66     // Echo characters received from PIO to the console
67     while (true) {
68         char c = uart_rx_program_getc(pio, sm);
69         putchar(c);
70     }
71
72     // This will free resources and unload our program
73     pio_remove_program_and_unclaim_sm(&uart_rx_program, pio, sm, offset);
74 }
```

3.6.5. Manchester Serial TX and RX

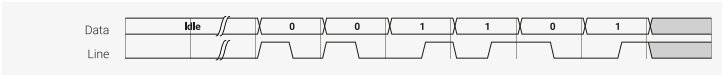

Figure 53. Manchester serial line code. Each data bit is represented by either a high pulse followed by a low pulse (representing a '0' bit) or a low pulse followed by a high pulse (a '1' bit).

Pico Examples: https://github.com/raspberrypi/pico-examples/blob/master/pio/manchester_encoding/manchester_encoding.pio Lines 8 - 30

```
 8 .program manchester_tx
 9 .side_set 1 opt
10
11 ; Transmit one bit every 12 cycles. a '0' is encoded as a high-low sequence
12 ; (each part lasting half a bit period, or 6 cycles) and a '1' is encoded as a
13 ; low-high sequence.
14 ;
15 ; Side-set bit 0 must be mapped to the GPIO used for TX.
16 ; Autopull must be enabled -- this program does not care about the threshold.
17 ; The program starts at the public label 'start'.
18
19 .wrap_target
20 do_1:
21     nop         side 0 [5] ; Low for 6 cycles (5 delay, +1 for nop)
22     jmp get_bit side 1 [3] ; High for 4 cycles. 'get_bit' takes another 2 cycles
23 do_0:
24     nop         side 1 [5] ; Output high for 6 cycles
25     nop         side 0 [3] ; Output low for 4 cycles
26 public start:
27 get_bit:
28     out x, 1               ; Always shift out one bit from OSR to X, so we can
29     jmp !x do_0            ; branch on it. Autopull refills the OSR when empty.
30 .wrap
```

Starting from the label called `start`, this program shifts one data bit at a time into the X register, so that it can branch on

the value. Depending on the outcome, it uses side-set to drive either a 1-0 or 0-1 sequence onto the chosen GPIO. This program uses autopull (Section 3.5.4.2) to automatically replenish the OSR from the TX FIFO once a certain amount of data has been shifted out, without interrupting program control flow or timing. This feature is enabled by a helper function in the `.pio` file which configures and starts the state machine:

Pico Examples: https://github.com/raspberrypi/pico-examples/blob/master/pio/manchester_encoding/manchester_encoding.pio Lines 33 - 46

```
33 static inline void manchester_tx_program_init(PIO pio, uint sm, uint offset, uint pin, float
   div) {
34     pio_sm_set_pins_with_mask(pio, sm, 0, 1u << pin);
35     pio_sm_set_consecutive_pindirs(pio, sm, pin, 1, true);
36     pio_gpio_init(pio, pin);
37
38     pio_sm_config c = manchester_tx_program_get_default_config(offset);
39     sm_config_set_sideset_pins(&c, pin);
40     sm_config_set_out_shift(&c, true, true, 32);
41     sm_config_set_fifo_join(&c, PIO_FIFO_JOIN_TX);
42     sm_config_set_clkdiv(&c, div);
43     pio_sm_init(pio, sm, offset + manchester_tx_offset_start, &c);
44
45     pio_sm_set_enabled(pio, sm, true);
46 }
```

Another state machine can be programmed to recover the original data from the transmitted signal:

Pico Examples: https://github.com/raspberrypi/pico-examples/blob/master/pio/manchester_encoding/manchester_encoding.pio Lines 49 - 71

```
49 .program manchester_rx
50
51 ; Assumes line is idle low, first bit is 0
52 ; One bit is 12 cycles
53 ; a '0' is encoded as 10
54 ; a '1' is encoded as 01
55 ;
56 ; Both the IN base and the JMP pin mapping must be pointed at the GPIO used for RX.
57 ; Autopush must be enabled.
58 ; Before enabling the SM, it should be placed in a 'wait 1, pin` state, so that
59 ; it will not start sampling until the initial line idle state ends.
60
61 start_of_0:            ; We are 0.25 bits into a 0 - signal is high
62     wait 0 pin 0       ; Wait for the 1->0 transition - at this point we are 0.5 into the bit
63     in y, 1 [8]        ; Emit a 0, sleep 3/4 of a bit
64     jmp pin start_of_0 ; If signal is 1 again, it's another 0 bit, otherwise it's a 1
65
66 .wrap_target
67 start_of_1:            ; We are 0.25 bits into a 1 - signal is 1
68     wait 1 pin 0       ; Wait for the 0->1 transition - at this point we are 0.5 into the bit
69     in x, 1 [8]        ; Emit a 1, sleep 3/4 of a bit
70     jmp pin start_of_0 ; If signal is 0 again, it's another 1 bit otherwise it's a 0
71 .wrap
```

The main complication here is staying aligned to the input transitions, as the transmitter's and receiver's clocks may drift relative to one another. In Manchester code there is always a transition in the centre of the symbol, and based on the initial line state (high or low) we know the direction of this transition, so we can use a `wait` instruction to resynchronise to the line transitions on every data bit.

This program expects the X and Y registers to be initialised with the values 1 and 0 respectively, so that a constant 1 or 0 can be provided to the `in` instruction. The code that configures the state machine initialises these registers by executing some `set` instructions before setting the program running.

Pico Examples: https://github.com/raspberrypi/pico-examples/blob/master/pio/manchester_encoding/manchester_encoding.pio Lines 74 - 94

```
74 static inline void manchester_rx_program_init(PIO pio, uint sm, uint offset, uint pin, float
   div) {
75     pio_sm_set_consecutive_pindirs(pio, sm, pin, 1, false);
76     pio_gpio_init(pio, pin);
77
78     pio_sm_config c = manchester_rx_program_get_default_config(offset);
79     sm_config_set_in_pins(&c, pin); // for WAIT
80     sm_config_set_jmp_pin(&c, pin); // for JMP
81     sm_config_set_in_shift(&c, true, true, 32);
82     sm_config_set_fifo_join(&c, PIO_FIFO_JOIN_RX);
83     sm_config_set_clkdiv(&c, div);
84     pio_sm_init(pio, sm, offset, &c);
85
86     // X and Y are set to 0 and 1, to conveniently emit these to ISR/FIFO.
87     pio_sm_exec(pio, sm, pio_encode_set(pio_x, 1));
88     pio_sm_exec(pio, sm, pio_encode_set(pio_y, 0));
89     // Assume line is idle low, and first transmitted bit is 0. Put SM in a
90     // wait state before enabling. RX will begin once the first 0 symbol is
91     // detected.
92     pio_sm_exec(pio, sm, pio_encode_wait_pin(1, 0) | pio_encode_delay(2));
93     pio_sm_set_enabled(pio, sm, true);
94 }
```

The example C program in the SDK will transmit Manchester serial data from GPIO2 to GPIO3 at approximately 10Mbps (assuming a system clock of 125MHz).

Pico Examples: https://github.com/raspberrypi/pico-examples/blob/master/pio/manchester_encoding/manchester_encoding.c Lines 20 - 43

```
20 int main() {
21     stdio_init_all();
22
23     PIO pio = pio0;
24     uint sm_tx = 0;
25     uint sm_rx = 1;
26
27     uint offset_tx = pio_add_program(pio, &manchester_tx_program);
28     uint offset_rx = pio_add_program(pio, &manchester_rx_program);
29     printf("Transmit program loaded at %d\n", offset_tx);
30     printf("Receive program loaded at %d\n", offset_rx);
31
32     manchester_tx_program_init(pio, sm_tx, offset_tx, pin_tx, 1.f);
33     manchester_rx_program_init(pio, sm_rx, offset_rx, pin_rx, 1.f);
34
35     pio_sm_set_enabled(pio, sm_tx, false);
36     pio_sm_put_blocking(pio, sm_tx, 0);
37     pio_sm_put_blocking(pio, sm_tx, 0x0ff0a55a);
38     pio_sm_put_blocking(pio, sm_tx, 0x12345678);
39     pio_sm_set_enabled(pio, sm_tx, true);
40
41     for (int i = 0; i < 3; ++i)
42         printf("%08x\n", pio_sm_get_blocking(pio, sm_rx));
43 }
```

3.6.6. Differential Manchester (BMC) TX and RX

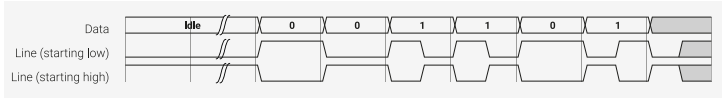

Figure 54. Differential Manchester serial line code, also known as biphase mark code (BMC). The line transitions at the start of every bit period. The presence of a transition in the centre of the bit period signifies a `1` data bit, and the absence, a `0` bit. These encoding rules are the same whether the line has an initial high or low state.

The transmit program is similar to the Manchester example: it repeatedly shifts a bit from the OSR into X (relying on autopull to refill the OSR in the background), branches, and drives a GPIO up and down based on the value of this bit. The added complication is that the pattern we drive onto the pin depends not just on the value of the data bit, as with vanilla Manchester encoding, but also on the state the line was left in at the end of the last bit period. This is illustrated in Figure 54, where the pattern is inverted if the line is initially high. To cope with this, there are two copies of the test-and-drive code, one for each initial line state, and these are linked together in the correct order by a sequence of jumps.

Pico Examples: https://github.com/raspberrypi/pico-examples/blob/master/pio/differential_manchester/differential_manchester.pio Lines 8 - 35

```
 8 .program differential_manchester_tx
 9 .side_set 1 opt
10
11 ; Transmit one bit every 16 cycles. In each bit period:
12 ; - A '0' is encoded as a transition at the start of the bit period
13 ; - A '1' is encoded as a transition at the start *and* in the middle
14 ;
15 ; Side-set bit 0 must be mapped to the data output pin.
16 ; Autopull must be enabled.
17
18 public start:
19 initial_high:
20     out x, 1                    ; Start of bit period: always assert transition
21     jmp !x high_0     side 1 [6] ; Test the data bit we just shifted out of OSR
22 high_1:
23     nop
24     jmp initial_high  side 0 [6] ; For `1` bits, also transition in the middle
25 high_0:
26     jmp initial_low           [7] ; Otherwise, the line is stable in the middle
27
28 initial_low:
29     out x, 1                    ; Always shift 1 bit from OSR to X so we can
30     jmp !x low_0      side 0 [6] ; branch on it. Autopull refills OSR for us.
31 low_1:
32     nop
33     jmp initial_low   side 1 [6] ; If there are two transitions, return to
34 low_0:
35     jmp initial_high          [7] ; the initial line state is flipped!
```

The `.pio` file also includes a helper function to initialise a state machine for differential Manchester TX, and connect it to a chosen GPIO. We arbitrarily choose a 32-bit frame size and LSB-first serialisation (`shift_to_right` is true in `sm_config_set_out_shift`), but as the program operates on one bit at a time, we could change this by reconfiguring the state machine.

Pico Examples: https://github.com/raspberrypi/pico-examples/blob/master/pio/differential_manchester/differential_manchester.pio Lines 38 - 53

```
38 static inline void differential_manchester_tx_program_init(PIO pio, uint sm, uint offset,
   uint pin, float div) {
39     pio_sm_set_pins_with_mask(pio, sm, 0, 1u << pin);
40     pio_sm_set_consecutive_pindirs(pio, sm, pin, 1, true);
41     pio_gpio_init(pio, pin);
42
43     pio_sm_config c = differential_manchester_tx_program_get_default_config(offset);
44     sm_config_set_sideset_pins(&c, pin);
45     sm_config_set_out_shift(&c, true, true, 32);
46     sm_config_set_fifo_join(&c, PIO_FIFO_JOIN_TX);
47     sm_config_set_clkdiv(&c, div);
```

```
48     pio_sm_init(pio, sm, offset + differential_manchester_tx_offset_start, &c);
49
50     // Execute a blocking pull so that we maintain the initial line state until data is
   available
51     pio_sm_exec(pio, sm, pio_encode_pull(false, true));
52     pio_sm_set_enabled(pio, sm, true);
53 }
```

The RX program uses the following strategy:

- Wait until the initial transition at the start of the bit period, so we stay aligned to the transmit clock
- Then wait 3/4 of the configured bit period, so that we are centred on the second half-bit-period (see Figure 54)
- Sample the line at this point to determine whether there are one or two transitions in this bit period
- Repeat

Pico Examples: https://github.com/raspberrypi/pico-examples/blob/master/pio/differential_manchester/differential_manchester.pio Lines 55 - 85

```
55 .program differential_manchester_rx
56
57 ; Assumes line is idle low
58 ; One bit is 16 cycles. In each bit period:
59 ; - A '0' is encoded as a transition at time 0
60 ; - A '1' is encoded as a transition at time 0 and a transition at time T/2
61 ;
62 ; The IN mapping and the JMP pin select must both be mapped to the GPIO used for
63 ; RX data. Autopush must be enabled.
64
65 public start:
66 initial_high:           ; Find rising edge at start of bit period
67     wait 1 pin, 0  [11] ; Delay to eye of second half-period (i.e 3/4 of way
68     jmp pin high_0      ; through bit) and branch on RX pin high/low.
69 high_1:
70     in x, 1             ; Second transition detected (a `1` data symbol)
71     jmp initial_high
72 high_0:
73     in y, 1 [1]         ; Line still high, no centre transition (data is `0`)
74     ; Fall-through
75
76 .wrap_target
77 initial_low:            ; Find falling edge at start of bit period
78     wait 0 pin, 0 [11]  ; Delay to eye of second half-period
79     jmp pin low_1
80 low_0:
81     in y, 1             ; Line still low, no centre transition (data is `0`)
82     jmp initial_high
83 low_1:                  ; Second transition detected (data is `1`)
84     in x, 1 [1]
85 .wrap
```

This code assumes that X and Y have the values 1 and 0, respectively. This is arranged for by the included C helper function:

Pico Examples: https://github.com/raspberrypi/pico-examples/blob/master/pio/differential_manchester/differential_manchester.pio Lines 88 - 104

```
88 static inline void differential_manchester_rx_program_init(PIO pio, uint sm, uint offset,
   uint pin, float div) {
89     pio_sm_set_consecutive_pindirs(pio, sm, pin, 1, false);
90     pio_gpio_init(pio, pin);
91
```

```
    pio_sm_config c = differential_manchester_rx_program_get_default_config(offset);
    sm_config_set_in_pins(&c, pin); // for WAIT
    sm_config_set_jmp_pin(&c, pin); // for JMP
    sm_config_set_in_shift(&c, true, true, 32);
    sm_config_set_fifo_join(&c, PIO_FIFO_JOIN_RX);
    sm_config_set_clkdiv(&c, div);
    pio_sm_init(pio, sm, offset, &c);

    // X and Y are set to 0 and 1, to conveniently emit these to ISR/FIFO.
    pio_sm_exec(pio, sm, pio_encode_set(pio_x, 1));
    pio_sm_exec(pio, sm, pio_encode_set(pio_y, 0));
    pio_sm_set_enabled(pio, sm, true);
}
```

All the pieces now exist to loopback some serial data over a wire between two GPIOs.

Pico Examples: https://github.com/raspberrypi/pico-examples/blob/master/pio/differential_manchester/differential_manchester.c

```
/**
 * Copyright (c) 2020 Raspberry Pi (Trading) Ltd.
 *
 * SPDX-License-Identifier: BSD-3-Clause
 */

#include <stdio.h>

#include "pico/stdlib.h"
#include "hardware/pio.h"
#include "differential_manchester.pio.h"

// Differential serial transmit/receive example
// Need to connect a wire from GPIO2 -> GPIO3

const uint pin_tx = 2;
const uint pin_rx = 3;

int main() {
    stdio_init_all();

    PIO pio = pio0;
    uint sm_tx = 0;
    uint sm_rx = 1;

    uint offset_tx = pio_add_program(pio, &differential_manchester_tx_program);
    uint offset_rx = pio_add_program(pio, &differential_manchester_rx_program);
    printf("Transmit program loaded at %d\n", offset_tx);
    printf("Receive program loaded at %d\n", offset_rx);

    // Configure state machines, set bit rate at 5 Mbps
    differential_manchester_tx_program_init(pio, sm_tx, offset_tx, pin_tx, 125.f / (16 * 5));
    differential_manchester_rx_program_init(pio, sm_rx, offset_rx, pin_rx, 125.f / (16 * 5));

    pio_sm_set_enabled(pio, sm_tx, false);
    pio_sm_put_blocking(pio, sm_tx, 0);
    pio_sm_put_blocking(pio, sm_tx, 0x0ff0a55a);
    pio_sm_put_blocking(pio, sm_tx, 0x12345678);
    pio_sm_set_enabled(pio, sm_tx, true);

    for (int i = 0; i < 3; ++i)
        printf("%08x\n", pio_sm_get_blocking(pio, sm_rx));
}
```

3.6.7. I2C

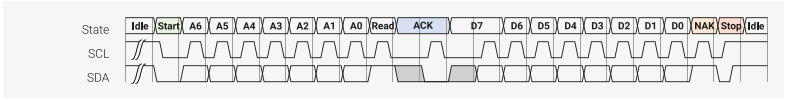

Figure 55. A 1-byte I2C read transfer. In the idle state, both lines float high. The initiator drives SDA low (a Start condition), followed by 7 address bits A6-A0, and a direction bit (Read/nWrite). The target drives SDA low to acknowledge the address (ACK). Data bytes follow. The target serialises data on SDA, clocked out by SCL. Every 9th clock, the **initiator** *pulls SDA low to acknowledge the data, except on the last byte, where it leaves the line high (NAK). Releasing SDA whilst SCL is high is a Stop condition, returning the bus to idle.*

I2C is an ubiquitous serial bus first described in the Dead Sea Scrolls, and later used by Philips Semiconductor. Two wires with pull-up resistors form an open-drain bus, and multiple agents address and signal one another over this bus by driving the bus lines low, or releasing them to be pulled high. It has a number of unusual attributes:

- SCL can be held low at any time, for any duration, by any member of the bus (not necessarily the target or initiator of the transfer). This is known as clock stretching. The bus does not advance until all drivers release the clock.
- Members of the bus can be a target of one transfer and initiate other transfers (the master/slave roles are not fixed). However this is poorly supported by most I2C hardware.
- SCL is not an edge-sensitive clock, rather SDA must be valid the entire time SCL is high
- In spite of the transparency of SDA against SCL, transitions of SDA whilst SCL is high are used to mark beginning and end of transfers (Start/Stop), or a new address phase within one (Restart)

The PIO program listed below handles serialisation, clock stretching, and checking of ACKs in the initiator role. It provides a mechanism for escaping PIO instructions in the FIFO datastream, to issue Start/Stop/Restart sequences at appropriate times. Provided no unexpected NAKs are received, this can perform long sequences of I2C transfers from a DMA buffer, without processor intervention.

Pico Examples: https://github.com/raspberrypi/pico-examples/blob/master/pio/i2c/i2c.pio Lines 8 - 73

```
 8 .program i2c
 9 .side_set 1 opt pindirs
10
11 ; TX Encoding:
12 ; | 15:10 | 9     | 8:1  | 0   |
13 ; | Instr | Final | Data | NAK |
14 ;
15 ; If Instr has a value n > 0, then this FIFO word has no
16 ; data payload, and the next n + 1 words will be executed as instructions.
17 ; Otherwise, shift out the 8 data bits, followed by the ACK bit.
18 ;
19 ; The Instr mechanism allows stop/start/repstart sequences to be programmed
20 ; by the processor, and then carried out by the state machine at defined points
21 ; in the datastream.
22 ;
23 ; The "Final" field should be set for the final byte in a transfer.
24 ; This tells the state machine to ignore a NAK: if this field is not
25 ; set, then any NAK will cause the state machine to halt and interrupt.
26 ;
27 ; Autopull should be enabled, with a threshold of 16.
28 ; Autopush should be enabled, with a threshold of 8.
29 ; The TX FIFO should be accessed with halfword writes, to ensure
30 ; the data is immediately available in the OSR.
31 ;
32 ; Pin mapping:
33 ; - Input pin 0 is SDA, 1 is SCL (if clock stretching used)
34 ; - Jump pin is SDA
35 ; - Side-set pin 0 is SCL
36 ; - Set pin 0 is SDA
37 ; - OUT pin 0 is SDA
38 ; - SCL must be SDA + 1 (for wait mapping)
39 ;
40 ; The OE outputs should be inverted in the system IO controls!
41 ; (It's possible for the inversion to be done in this program,
42 ; but costs 2 instructions: 1 for inversion, and one to cope
```

```
43 ; with the side effect of the MOV on TX shift counter.)
44
45 do_nack:
46     jmp y-- entry_point        ; Continue if NAK was expected
47     irq wait 0 rel             ; Otherwise stop, ask for help
48
49 do_byte:
50     set x, 7                   ; Loop 8 times
51 bitloop:
52     out pindirs, 1         [7] ; Serialise write data (all-ones if reading)
53     nop             side 1 [2] ; SCL rising edge
54     wait 1 pin, 1          [4] ; Allow clock to be stretched
55     in pins, 1             [7] ; Sample read data in middle of SCL pulse
56     jmp x-- bitloop side 0 [7] ; SCL falling edge
57
58     ; Handle ACK pulse
59     out pindirs, 1         [7] ; On reads, we provide the ACK.
60     nop             side 1 [7] ; SCL rising edge
61     wait 1 pin, 1          [7] ; Allow clock to be stretched
62     jmp pin do_nack side 0 [2] ; Test SDA for ACK/NAK, fall through if ACK
63
64 public entry_point:
65 .wrap_target
66     out x, 6                   ; Unpack Instr count
67     out y, 1                   ; Unpack the NAK ignore bit
68     jmp !x do_byte             ; Instr == 0, this is a data record.
69     out null, 32               ; Instr > 0, remainder of this OSR is invalid
70 do_exec:
71     out exec, 16               ; Execute one instruction per FIFO word
72     jmp x-- do_exec            ; Repeat n + 1 times
73 .wrap
```

The IO mapping required by the I2C program is quite complex, due to the different ways that the two serial lines must be driven and sampled. One interesting feature is that state machine must drive the output enable high when the output is low, since the bus is open-drain, so the sense of the data is inverted. This could be handled in the PIO program (e.g. `mov osr, ~osr`), but instead we can use the IO controls on RP2040 to perform this inversion in the GPIO muxes, saving an instruction.

Pico Examples: https://github.com/raspberrypi/pico-examples/blob/master/pio/i2c/i2c.pio Lines 81 - 121

```
 81 static inline void i2c_program_init(PIO pio, uint sm, uint offset, uint pin_sda, uint
    pin_scl) {
 82     assert(pin_scl == pin_sda + 1);
 83     pio_sm_config c = i2c_program_get_default_config(offset);
 84
 85     // IO mapping
 86     sm_config_set_out_pins(&c, pin_sda, 1);
 87     sm_config_set_set_pins(&c, pin_sda, 1);
 88     sm_config_set_in_pins(&c, pin_sda);
 89     sm_config_set_sideset_pins(&c, pin_scl);
 90     sm_config_set_jmp_pin(&c, pin_sda);
 91
 92     sm_config_set_out_shift(&c, false, true, 16);
 93     sm_config_set_in_shift(&c, false, true, 8);
 94
 95     float div = (float)clock_get_hz(clk_sys) / (32 * 100000);
 96     sm_config_set_clkdiv(&c, div);
 97
 98     // Try to avoid glitching the bus while connecting the IOs. Get things set
 99     // up so that pin is driven down when PIO asserts OE low, and pulled up
100     // otherwise.
```

```
101     gpio_pull_up(pin_scl);
102     gpio_pull_up(pin_sda);
103     uint32_t both_pins = (1u << pin_sda) | (1u << pin_scl);
104     pio_sm_set_pins_with_mask(pio, sm, both_pins, both_pins);
105     pio_sm_set_pindirs_with_mask(pio, sm, both_pins, both_pins);
106     pio_gpio_init(pio, pin_sda);
107     gpio_set_oeover(pin_sda, GPIO_OVERRIDE_INVERT);
108     pio_gpio_init(pio, pin_scl);
109     gpio_set_oeover(pin_scl, GPIO_OVERRIDE_INVERT);
110     pio_sm_set_pins_with_mask(pio, sm, 0, both_pins);
111
112     // Clear IRQ flag before starting, and make sure flag doesn't actually
113     // assert a system-level interrupt (we're using it as a status flag)
114     pio_set_irq0_source_enabled(pio, (enum pio_interrupt_source) ((uint) pis_interrupt0 +
    sm), false);
115     pio_set_irq1_source_enabled(pio, (enum pio_interrupt_source) ((uint) pis_interrupt0 +
    sm), false);
116     pio_interrupt_clear(pio, sm);
117
118     // Configure and start SM
119     pio_sm_init(pio, sm, offset + i2c_offset_entry_point, &c);
120     pio_sm_set_enabled(pio, sm, true);
121 }
```

We can also use the PIO assembler to generate a table of instructions for passing through the FIFO, for Start/Stop/Restart conditions.

Pico Examples: https://github.com/raspberrypi/pico-examples/blob/master/pio/i2c/i2c.pio Lines 126 - 136

```
126 .program set_scl_sda
127 .side_set 1 opt
128
129 ; Assemble a table of instructions which software can select from, and pass
130 ; into the FIFO, to issue START/STOP/RSTART. This isn't intended to be run as
131 ; a complete program.
132
133     set pindirs, 0 side 0 [7] ; SCL = 0, SDA = 0
134     set pindirs, 1 side 0 [7] ; SCL = 0, SDA = 1
135     set pindirs, 0 side 1 [7] ; SCL = 1, SDA = 0
136     set pindirs, 1 side 1 [7] ; SCL = 1, SDA = 1
```

The example code does blocking software IO on the state machine's FIFOs, to avoid the extra complexity of setting up the system DMA. For example, an I2C start condition is enqueued like so:

Pico Examples: https://github.com/raspberrypi/pico-examples/blob/master/pio/i2c/pio_i2c.c Lines 69 - 73

```
69 void pio_i2c_start(PIO pio, uint sm) {
70     pio_i2c_put_or_err(pio, sm, 1u << PIO_I2C_ICOUNT_LSB); // Escape code for 2 instruction
   sequence
71     pio_i2c_put_or_err(pio, sm, set_scl_sda_program_instructions[I2C_SC1_SD0]);    // We are
   already in idle state, just pull SDA low
72     pio_i2c_put_or_err(pio, sm, set_scl_sda_program_instructions[I2C_SC0_SD0]);    // Also
   pull clock low so we can present data
73 }
```

Because I2C can go wrong at so many points, we need to be able to check the error flag asserted by the state machine, clear the halt and restart it, before asserting a Stop condition and releasing the bus.

Pico Examples: https://github.com/raspberrypi/pico-examples/blob/master/pio/i2c/pio_i2c.c Lines 15 - 17

```
15 bool pio_i2c_check_error(PIO pio, uint sm) {
16     return pio_interrupt_get(pio, sm);
17 }
```

Pico Examples: https://github.com/raspberrypi/pico-examples/blob/master/pio/i2c/pio_i2c.c Lines 19 - 23

```
19 void pio_i2c_resume_after_error(PIO pio, uint sm) {
20     pio_sm_drain_tx_fifo(pio, sm);
21     pio_sm_exec(pio, sm, (pio->sm[sm].execctrl & PIO_SM0_EXECCTRL_WRAP_BOTTOM_BITS) >>
   PIO_SM0_EXECCTRL_WRAP_BOTTOM_LSB);
22     pio_interrupt_clear(pio, sm);
23 }
```

We need some higher-level functions to pass correctly-formatted data though the FIFOs and insert Starts, Stops, NAKs and so on at the correct points. This is enough to present a similar interface to the other hardware I2Cs on RP2040.

Pico Examples: https://github.com/raspberrypi/pico-examples/blob/master/pio/i2c/i2c_bus_scan.c Lines 13 - 42

```
13 int main() {
14     stdio_init_all();
15
16     PIO pio = pio0;
17     uint sm = 0;
18     uint offset = pio_add_program(pio, &i2c_program);
19     i2c_program_init(pio, sm, offset, PIN_SDA, PIN_SCL);
20
21     printf("\nPIO I2C Bus Scan\n");
22     printf("   0  1  2  3  4  5  6  7  8  9  A  B  C  D  E  F\n");
23
24     for (int addr = 0; addr < (1 << 7); ++addr) {
25         if (addr % 16 == 0) {
26             printf("%02x ", addr);
27         }
28         // Perform a 0-byte read from the probe address. The read function
29         // returns a negative result NAK'd any time other than the last data
30         // byte. Skip over reserved addresses.
31         int result;
32         if (reserved_addr(addr))
33             result = -1;
34         else
35             result = pio_i2c_read_blocking(pio, sm, addr, NULL, 0);
36
37         printf(result < 0 ? "." : "@");
38         printf(addr % 16 == 15 ? "\n" : "  ");
39     }
40     printf("Done.\n");
41     return 0;
42 }
```

3.6.8. PWM

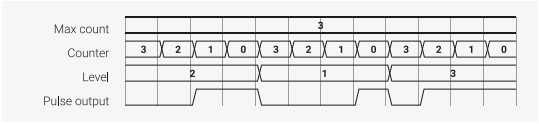

Figure 56. Pulse width modulation (PWM). The state machine outputs positive voltage pulses at regular intervals. The width of these pulses is controlled, so that the line is high for some controlled fraction of the time (the duty cycle). One use of this is to smoothly vary the brightness of an LED, by pulsing it faster than human persistence of vision.

This program repeatedly counts down to 0 with the Y register, whilst comparing the Y count to a pulse width held in the X register. The output is asserted low before counting begins, and asserted high when the value in Y reaches X. Once Y reaches 0, the process repeats, and the output is once more driven low. The fraction of time that the output is high is therefore proportional to the pulse width stored in X.

Pico Examples: https://github.com/raspberrypi/pico-examples/blob/master/pio/pwm/pwm.pio Lines 10 - 22

```
10 .program pwm
11 .side_set 1 opt
12
13     pull noblock    side 0 ; Pull from FIFO to OSR if available, else copy X to OSR.
14     mov x, osr             ; Copy most-recently-pulled value back to scratch X
15     mov y, isr             ; ISR contains PWM period. Y used as counter.
16 countloop:
17     jmp x!=y noset         ; Set pin high if X == Y, keep the two paths length matched
18     jmp skip        side 1
19 noset:
20     nop                    ; Single dummy cycle to keep the two paths the same length
21 skip:
22     jmp y-- countloop      ; Loop until Y hits 0, then pull a fresh PWM value from FIFO
```

Often, a PWM can be left at a particular pulse width for thousands of pulses, rather than supplying a new pulse width each time. This example highlights how a nonblocking `PULL` (Section 3.4.7) can achieve this: if the TX FIFO is empty, a nonblocking `PULL` will copy X to the OSR. After pulling, the program copies the OSR into X, so that it can be compared to the count value in Y. The net effect is that, if a new duty cycle value has not been supplied through the TX FIFO at the start of this period, the duty cycle from the previous period (which has been copied from X to OSR via the failed `PULL`, and then back to X via the `MOV`) is *reused*, for as many periods as necessary.

Another useful technique shown here is using the ISR as a configuration register, if `IN` instructions are not required. System software can load an arbitrary 32-bit value into the ISR (by executing instructions directly on the state machine), and the program will copy this value into Y each time it begins counting. The ISR can be used to configure the range of PWM counting, and the state machine's clock divider controls the rate of counting.

To start modulating some pulses, we first need to map the state machine's side-set pins to the GPIO we want to output PWM on, and tell the state machine where the program is loaded in the PIO instruction memory:

Pico Examples: https://github.com/raspberrypi/pico-examples/blob/master/pio/pwm/pwm.pio Lines 25 - 31

```
25 static inline void pwm_program_init(PIO pio, uint sm, uint offset, uint pin) {
26    pio_gpio_init(pio, pin);
27    pio_sm_set_consecutive_pindirs(pio, sm, pin, 1, true);
28    pio_sm_config c = pwm_program_get_default_config(offset);
29    sm_config_set_sideset_pins(&c, pin);
30    pio_sm_init(pio, sm, offset, &c);
31 }
```

A little footwork is required to load the ISR with the desired counting range:

Pico Examples: https://github.com/raspberrypi/pico-examples/blob/master/pio/pwm/pwm.c Lines 14 - 20

```
14 void pio_pwm_set_period(PIO pio, uint sm, uint32_t period) {
15     pio_sm_set_enabled(pio, sm, false);
16     pio_sm_put_blocking(pio, sm, period);
17     pio_sm_exec(pio, sm, pio_encode_pull(false, false));
```

```
18     pio_sm_exec(pio, sm, pio_encode_out(pio_isr, 32));
19     pio_sm_set_enabled(pio, sm, true);
20 }
```

Once this is done, the state machine can be enabled, and PWM values written directly to its TX FIFO.

Pico Examples: https://github.com/raspberrypi/pico-examples/blob/master/pio/pwm/pwm.c Lines 23 - 25

```
23 void pio_pwm_set_level(PIO pio, uint sm, uint32_t level) {
24     pio_sm_put_blocking(pio, sm, level);
25 }
```

Pico Examples: https://github.com/raspberrypi/pico-examples/blob/master/pio/pwm/pwm.c Lines 27 - 51

```
27 int main() {
28     stdio_init_all();
29 #ifndef PICO_DEFAULT_LED_PIN
30 #warning pio/pwm example requires a board with a regular LED
31     puts("Default LED pin was not defined");
32 #else
33
34     // todo get free sm
35     PIO pio = pio0;
36     int sm = 0;
37     uint offset = pio_add_program(pio, &pwm_program);
38     printf("Loaded program at %d\n", offset);
39
40     pwm_program_init(pio, sm, offset, PICO_DEFAULT_LED_PIN);
41     pio_pwm_set_period(pio, sm, (1u << 16) - 1);
42
43     int level = 0;
44     while (true) {
45         printf("Level = %d\n", level);
46         pio_pwm_set_level(pio, sm, level * level);
47         level = (level + 1) % 256;
48         sleep_ms(10);
49     }
50 #endif
51 }
```

If the TX FIFO is kept topped up with fresh pulse width values, this program will consume a new pulse width for each pulse. Once the FIFO runs dry, the program will again start reusing the most recently supplied value.

3.6.9. Addition

Although not designed for computation, PIO is quite likely Turing-complete, provided a long enough piece of tape can be found. It is conjectured that it could run DOOM, given a sufficiently high clock speed.

Pico Examples: https://github.com/raspberrypi/pico-examples/blob/master/pio/addition/addition.pio Lines 7 - 25

```
 7 .program addition
 8
 9 ; Pop two 32 bit integers from the TX FIFO, add them together, and push the
10 ; result to the TX FIFO. Autopush/pull should be disabled as we're using
11 ; explicit push and pull instructions.
12 ;
```

```
13 ; This program uses the two's complement identity x + y == ~(~x - y)
14
15     pull
16     mov x, ~osr
17     pull
18     mov y, osr
19     jmp test        ; this loop is equivalent to the following C code:
20 incr:               ; while (y--)
21     jmp x-- test    ;     x--;
22 test:               ; This has the effect of subtracting y from x, eventually.
23     jmp y-- incr
24     mov isr, ~x
25     push
```

A full 32-bit addition takes only around one minute at 125MHz. The program pulls two numbers from the TX FIFO and pushes their sum to the RX FIFO, which is perfect for use either with the system DMA, or directly by the processor:

Pico Examples: https://github.com/raspberrypi/pico-examples/blob/master/pio/addition/addition.c

```
1  /**
2   * Copyright (c) 2020 Raspberry Pi (Trading) Ltd.
3   *
4   * SPDX-License-Identifier: BSD-3-Clause
5   */
6
7  #include <stdlib.h>
8  #include <stdio.h>
9
10 #include "pico/stdlib.h"
11 #include "hardware/pio.h"
12 #include "addition.pio.h"
13
14 // Pop quiz: how many additions does the processor do when calling this function
15 uint32_t do_addition(PIO pio, uint sm, uint32_t a, uint32_t b) {
16     pio_sm_put_blocking(pio, sm, a);
17     pio_sm_put_blocking(pio, sm, b);
18     return pio_sm_get_blocking(pio, sm);
19 }
20
21 int main() {
22     stdio_init_all();
23
24     PIO pio = pio0;
25     uint sm = 0;
26     uint offset = pio_add_program(pio, &addition_program);
27     addition_program_init(pio, sm, offset);
28
29     printf("Doing some random additions:\n");
30     for (int i = 0; i < 10; ++i) {
31         uint a = rand() % 100;
32         uint b = rand() % 100;
33         printf("%u + %u = %u\n", a, b, do_addition(pio, sm, a, b));
34     }
35 }
```

3.6.10. Further Examples

The **Raspberry Pi Pico-series C/C++ SDK** book has a PIO chapter which goes into depth on some software-centric topics not presented here. It includes a PIO + DMA logic analyser example that can sample every GPIO on every cycle (a

bandwidth of nearly 4Gbps at 125MHz, although this does fill up RP2040's RAM quite quickly).

There are also further examples in the `pio/` directory in the Pico Examples repository.

Some of the more experimental example code, such as DPI and SD card support, is currently located in the Pico Extras and Pico Playground repositories. The PIO parts of these are functional, but the surrounding software stacks are still in an experimental state.

3.7. List of Registers

The PIO0 and PIO1 registers start at base addresses of `0x50200000` and `0x50300000` respectively (defined as PIO0_BASE and PIO1_BASE in SDK).

Table 367. List of PIO registers

Offset	Name	Info
0x000	CTRL	PIO control register
0x004	FSTAT	FIFO status register
0x008	FDEBUG	FIFO debug register
0x00c	FLEVEL	FIFO levels
0x010	TXF0	Direct write access to the TX FIFO for this state machine. Each write pushes one word to the FIFO. Attempting to write to a full FIFO has no effect on the FIFO state or contents, and sets the sticky FDEBUG_TXOVER error flag for this FIFO.
0x014	TXF1	Direct write access to the TX FIFO for this state machine. Each write pushes one word to the FIFO. Attempting to write to a full FIFO has no effect on the FIFO state or contents, and sets the sticky FDEBUG_TXOVER error flag for this FIFO.
0x018	TXF2	Direct write access to the TX FIFO for this state machine. Each write pushes one word to the FIFO. Attempting to write to a full FIFO has no effect on the FIFO state or contents, and sets the sticky FDEBUG_TXOVER error flag for this FIFO.
0x01c	TXF3	Direct write access to the TX FIFO for this state machine. Each write pushes one word to the FIFO. Attempting to write to a full FIFO has no effect on the FIFO state or contents, and sets the sticky FDEBUG_TXOVER error flag for this FIFO.
0x020	RXF0	Direct read access to the RX FIFO for this state machine. Each read pops one word from the FIFO. Attempting to read from an empty FIFO has no effect on the FIFO state, and sets the sticky FDEBUG_RXUNDER error flag for this FIFO. The data returned to the system on a read from an empty FIFO is undefined.
0x024	RXF1	Direct read access to the RX FIFO for this state machine. Each read pops one word from the FIFO. Attempting to read from an empty FIFO has no effect on the FIFO state, and sets the sticky FDEBUG_RXUNDER error flag for this FIFO. The data returned to the system on a read from an empty FIFO is undefined.
0x028	RXF2	Direct read access to the RX FIFO for this state machine. Each read pops one word from the FIFO. Attempting to read from an empty FIFO has no effect on the FIFO state, and sets the sticky FDEBUG_RXUNDER error flag for this FIFO. The data returned to the system on a read from an empty FIFO is undefined.

Offset	Name	Info
0x02c	RXF3	Direct read access to the RX FIFO for this state machine. Each read pops one word from the FIFO. Attempting to read from an empty FIFO has no effect on the FIFO state, and sets the sticky FDEBUG_RXUNDER error flag for this FIFO. The data returned to the system on a read from an empty FIFO is undefined.
0x030	IRQ	State machine IRQ flags register. Write 1 to clear. There are 8 state machine IRQ flags, which can be set, cleared, and waited on by the state machines. There's no fixed association between flags and state machines — any state machine can use any flag. Any of the 8 flags can be used for timing synchronisation between state machines, using IRQ and WAIT instructions. The lower four of these flags are also routed out to system-level interrupt requests, alongside FIFO status interrupts — see e.g. IRQ0_INTE.
0x034	IRQ_FORCE	Writing a 1 to each of these bits will forcibly assert the corresponding IRQ. Note this is different to the INTF register: writing here affects PIO internal state. INTF just asserts the processor-facing IRQ signal for testing ISRs, and is not visible to the state machines.
0x038	INPUT_SYNC_BYPASS	There is a 2-flipflop synchronizer on each GPIO input, which protects PIO logic from metastabilities. This increases input delay, and for fast synchronous IO (e.g. SPI) these synchronizers may need to be bypassed. Each bit in this register corresponds to one GPIO. 0 → input is synchronized (default) 1 → synchronizer is bypassed If in doubt, leave this register as all zeroes.
0x03c	DBG_PADOUT	Read to sample the pad output values PIO is currently driving to the GPIOs. On RP2040 there are 30 GPIOs, so the two most significant bits are hardwired to 0.
0x040	DBG_PADOE	Read to sample the pad output enables (direction) PIO is currently driving to the GPIOs. On RP2040 there are 30 GPIOs, so the two most significant bits are hardwired to 0.
0x044	DBG_CFGINFO	The PIO hardware has some free parameters that may vary between chip products. These should be provided in the chip datasheet, but are also exposed here.
0x048	INSTR_MEM0	Write-only access to instruction memory location 0
0x04c	INSTR_MEM1	Write-only access to instruction memory location 1
0x050	INSTR_MEM2	Write-only access to instruction memory location 2
0x054	INSTR_MEM3	Write-only access to instruction memory location 3
0x058	INSTR_MEM4	Write-only access to instruction memory location 4
0x05c	INSTR_MEM5	Write-only access to instruction memory location 5
0x060	INSTR_MEM6	Write-only access to instruction memory location 6
0x064	INSTR_MEM7	Write-only access to instruction memory location 7

Offset	Name	Info
0x068	INSTR_MEM8	Write-only access to instruction memory location 8
0x06c	INSTR_MEM9	Write-only access to instruction memory location 9
0x070	INSTR_MEM10	Write-only access to instruction memory location 10
0x074	INSTR_MEM11	Write-only access to instruction memory location 11
0x078	INSTR_MEM12	Write-only access to instruction memory location 12
0x07c	INSTR_MEM13	Write-only access to instruction memory location 13
0x080	INSTR_MEM14	Write-only access to instruction memory location 14
0x084	INSTR_MEM15	Write-only access to instruction memory location 15
0x088	INSTR_MEM16	Write-only access to instruction memory location 16
0x08c	INSTR_MEM17	Write-only access to instruction memory location 17
0x090	INSTR_MEM18	Write-only access to instruction memory location 18
0x094	INSTR_MEM19	Write-only access to instruction memory location 19
0x098	INSTR_MEM20	Write-only access to instruction memory location 20
0x09c	INSTR_MEM21	Write-only access to instruction memory location 21
0x0a0	INSTR_MEM22	Write-only access to instruction memory location 22
0x0a4	INSTR_MEM23	Write-only access to instruction memory location 23
0x0a8	INSTR_MEM24	Write-only access to instruction memory location 24
0x0ac	INSTR_MEM25	Write-only access to instruction memory location 25
0x0b0	INSTR_MEM26	Write-only access to instruction memory location 26
0x0b4	INSTR_MEM27	Write-only access to instruction memory location 27
0x0b8	INSTR_MEM28	Write-only access to instruction memory location 28
0x0bc	INSTR_MEM29	Write-only access to instruction memory location 29
0x0c0	INSTR_MEM30	Write-only access to instruction memory location 30
0x0c4	INSTR_MEM31	Write-only access to instruction memory location 31
0x0c8	SM0_CLKDIV	Clock divisor register for state machine 0 Frequency = clock freq / (CLKDIV_INT + CLKDIV_FRAC / 256)
0x0cc	SM0_EXECCTRL	Execution/behavioural settings for state machine 0
0x0d0	SM0_SHIFTCTRL	Control behaviour of the input/output shift registers for state machine 0
0x0d4	SM0_ADDR	Current instruction address of state machine 0
0x0d8	SM0_INSTR	Read to see the instruction currently addressed by state machine 0's program counter Write to execute an instruction immediately (including jumps) and then resume execution.
0x0dc	SM0_PINCTRL	State machine pin control
0x0e0	SM1_CLKDIV	Clock divisor register for state machine 1 Frequency = clock freq / (CLKDIV_INT + CLKDIV_FRAC / 256)
0x0e4	SM1_EXECCTRL	Execution/behavioural settings for state machine 1

Offset	Name	Info
0x0e8	SM1_SHIFTCTRL	Control behaviour of the input/output shift registers for state machine 1
0x0ec	SM1_ADDR	Current instruction address of state machine 1
0x0f0	SM1_INSTR	Read to see the instruction currently addressed by state machine 1's program counter Write to execute an instruction immediately (including jumps) and then resume execution.
0x0f4	SM1_PINCTRL	State machine pin control
0x0f8	SM2_CLKDIV	Clock divisor register for state machine 2 Frequency = clock freq / (CLKDIV_INT + CLKDIV_FRAC / 256)
0x0fc	SM2_EXECCTRL	Execution/behavioural settings for state machine 2
0x100	SM2_SHIFTCTRL	Control behaviour of the input/output shift registers for state machine 2
0x104	SM2_ADDR	Current instruction address of state machine 2
0x108	SM2_INSTR	Read to see the instruction currently addressed by state machine 2's program counter Write to execute an instruction immediately (including jumps) and then resume execution.
0x10c	SM2_PINCTRL	State machine pin control
0x110	SM3_CLKDIV	Clock divisor register for state machine 3 Frequency = clock freq / (CLKDIV_INT + CLKDIV_FRAC / 256)
0x114	SM3_EXECCTRL	Execution/behavioural settings for state machine 3
0x118	SM3_SHIFTCTRL	Control behaviour of the input/output shift registers for state machine 3
0x11c	SM3_ADDR	Current instruction address of state machine 3
0x120	SM3_INSTR	Read to see the instruction currently addressed by state machine 3's program counter Write to execute an instruction immediately (including jumps) and then resume execution.
0x124	SM3_PINCTRL	State machine pin control
0x128	INTR	Raw Interrupts
0x12c	IRQ0_INTE	Interrupt Enable for irq0
0x130	IRQ0_INTF	Interrupt Force for irq0
0x134	IRQ0_INTS	Interrupt status after masking & forcing for irq0
0x138	IRQ1_INTE	Interrupt Enable for irq1
0x13c	IRQ1_INTF	Interrupt Force for irq1
0x140	IRQ1_INTS	Interrupt status after masking & forcing for irq1

PIO: CTRL Register

Offset: 0x000

Description

PIO control register

Table 368. CTRL Register

Bits	Description	Type	Reset
31:12	Reserved.	-	-
11:8	**CLKDIV_RESTART**: Restart a state machine's clock divider from an initial phase of 0. Clock dividers are free-running, so once started, their output (including fractional jitter) is completely determined by the integer/fractional divisor configured in SMx_CLKDIV. This means that, if multiple clock dividers with the same divisor are restarted simultaneously, by writing multiple 1 bits to this field, the execution clocks of those state machines will run in precise lockstep. Note that setting/clearing SM_ENABLE does not stop the clock divider from running, so once multiple state machines' clocks are synchronised, it is safe to disable/reenable a state machine, whilst keeping the clock dividers in sync. Note also that CLKDIV_RESTART can be written to whilst the state machine is running, and this is useful to resynchronise clock dividers after the divisors (SMx_CLKDIV) have been changed on-the-fly.	SC	0x0
7:4	**SM_RESTART**: Write 1 to instantly clear internal SM state which may be otherwise difficult to access and will affect future execution. Specifically, the following are cleared: input and output shift counters; the contents of the input shift register; the delay counter; the waiting-on-IRQ state; any stalled instruction written to SMx_INSTR or run by OUT/MOV EXEC; any pin write left asserted due to OUT_STICKY. The program counter, the contents of the output shift register and the X/Y scratch registers are not affected.	SC	0x0
3:0	**SM_ENABLE**: Enable/disable each of the four state machines by writing 1/0 to each of these four bits. When disabled, a state machine will cease executing instructions, except those written directly to SMx_INSTR by the system. Multiple bits can be set/cleared at once to run/halt multiple state machines simultaneously.	RW	0x0

PIO: FSTAT Register

Offset: 0x004

Description

FIFO status register

Table 369. FSTAT Register

Bits	Description	Type	Reset
31:28	Reserved.	-	-
27:24	**TXEMPTY**: State machine TX FIFO is empty	RO	0xf
23:20	Reserved.	-	-
19:16	**TXFULL**: State machine TX FIFO is full	RO	0x0
15:12	Reserved.	-	-
11:8	**RXEMPTY**: State machine RX FIFO is empty	RO	0xf
7:4	Reserved.	-	-

Bits	Description	Type	Reset
3:0	**RXFULL**: State machine RX FIFO is full	RO	0x0

PIO: FDEBUG Register

Offset: 0x008

Description

FIFO debug register

Table 370. FDEBUG Register

Bits	Description	Type	Reset
31:28	Reserved.	-	-
27:24	**TXSTALL**: State machine has stalled on empty TX FIFO during a blocking PULL, or an OUT with autopull enabled. Write 1 to clear.	WC	0x0
23:20	Reserved.	-	-
19:16	**TXOVER**: TX FIFO overflow (i.e. write-on-full by the system) has occurred. Write 1 to clear. Note that write-on-full does not alter the state or contents of the FIFO in any way, but the data that the system attempted to write is dropped, so if this flag is set, your software has quite likely dropped some data on the floor.	WC	0x0
15:12	Reserved.	-	-
11:8	**RXUNDER**: RX FIFO underflow (i.e. read-on-empty by the system) has occurred. Write 1 to clear. Note that read-on-empty does not perturb the state of the FIFO in any way, but the data returned by reading from an empty FIFO is undefined, so this flag generally only becomes set due to some kind of software error.	WC	0x0
7:4	Reserved.	-	-
3:0	**RXSTALL**: State machine has stalled on full RX FIFO during a blocking PUSH, or an IN with autopush enabled. This flag is also set when a nonblocking PUSH to a full FIFO took place, in which case the state machine has dropped data. Write 1 to clear.	WC	0x0

PIO: FLEVEL Register

Offset: 0x00c

Description

FIFO levels

Table 371. FLEVEL Register

Bits	Description	Type	Reset
31:28	**RX3**	RO	0x0
27:24	**TX3**	RO	0x0
23:20	**RX2**	RO	0x0
19:16	**TX2**	RO	0x0
15:12	**RX1**	RO	0x0
11:8	**TX1**	RO	0x0
7:4	**RX0**	RO	0x0
3:0	**TX0**	RO	0x0

PIO: TXF0, TXF1, TXF2, TXF3 Registers

Offsets: 0x010, 0x014, 0x018, 0x01c

Table 372. TXF0, TXF1, TXF2, TXF3 Registers

Bits	Description	Type	Reset
31:0	Direct write access to the TX FIFO for this state machine. Each write pushes one word to the FIFO. Attempting to write to a full FIFO has no effect on the FIFO state or contents, and sets the sticky FDEBUG_TXOVER error flag for this FIFO.	WF	0x00000000

PIO: RXF0, RXF1, RXF2, RXF3 Registers

Offsets: 0x020, 0x024, 0x028, 0x02c

Table 373. RXF0, RXF1, RXF2, RXF3 Registers

Bits	Description	Type	Reset
31:0	Direct read access to the RX FIFO for this state machine. Each read pops one word from the FIFO. Attempting to read from an empty FIFO has no effect on the FIFO state, and sets the sticky FDEBUG_RXUNDER error flag for this FIFO. The data returned to the system on a read from an empty FIFO is undefined.	RF	-

PIO: IRQ Register

Offset: 0x030

Table 374. IRQ Register

Bits	Description	Type	Reset
31:8	Reserved.	-	-
7:0	State machine IRQ flags register. Write 1 to clear. There are 8 state machine IRQ flags, which can be set, cleared, and waited on by the state machines. There's no fixed association between flags and state machines — any state machine can use any flag. Any of the 8 flags can be used for timing synchronisation between state machines, using IRQ and WAIT instructions. The lower four of these flags are also routed out to system-level interrupt requests, alongside FIFO status interrupts — see e.g. IRQ0_INTE.	WC	0x00

PIO: IRQ_FORCE Register

Offset: 0x034

Table 375. IRQ_FORCE Register

Bits	Description	Type	Reset
31:8	Reserved.	-	-
7:0	Writing a 1 to each of these bits will forcibly assert the corresponding IRQ. Note this is different to the INTF register: writing here affects PIO internal state. INTF just asserts the processor-facing IRQ signal for testing ISRs, and is not visible to the state machines.	WF	0x00

PIO: INPUT_SYNC_BYPASS Register

Offset: 0x038

Table 376. INPUT_SYNC_BYPASS Register

Bits	Description	Type	Reset
31:0	There is a 2-flipflop synchronizer on each GPIO input, which protects PIO logic from metastabilities. This increases input delay, and for fast synchronous IO (e.g. SPI) these synchronizers may need to be bypassed. Each bit in this register corresponds to one GPIO. 0 → input is synchronized (default) 1 → synchronizer is bypassed If in doubt, leave this register as all zeroes.	RW	0x00000000

PIO: DBG_PADOUT Register

Offset: 0x03c

Table 377. DBG_PADOUT Register

Bits	Description	Type	Reset
31:0	Read to sample the pad output values PIO is currently driving to the GPIOs. On RP2040 there are 30 GPIOs, so the two most significant bits are hardwired to 0.	RO	0x00000000

PIO: DBG_PADOE Register

Offset: 0x040

Table 378. DBG_PADOE Register

Bits	Description	Type	Reset
31:0	Read to sample the pad output enables (direction) PIO is currently driving to the GPIOs. On RP2040 there are 30 GPIOs, so the two most significant bits are hardwired to 0.	RO	0x00000000

PIO: DBG_CFGINFO Register

Offset: 0x044

Description

The PIO hardware has some free parameters that may vary between chip products. These should be provided in the chip datasheet, but are also exposed here.

Table 379. DBG_CFGINFO Register

Bits	Description	Type	Reset
31:22	Reserved.	-	-
21:16	**IMEM_SIZE**: The size of the instruction memory, measured in units of one instruction	RO	-
15:12	Reserved.	-	-
11:8	**SM_COUNT**: The number of state machines this PIO instance is equipped with.	RO	-
7:6	Reserved.	-	-
5:0	**FIFO_DEPTH**: The depth of the state machine TX/RX FIFOs, measured in words. Joining fifos via SHIFTCTRL_FJOIN gives one FIFO with double this depth.	RO	-

PIO: INSTR_MEM0, INSTR_MEM1, ..., INSTR_MEM30, INSTR_MEM31 Registers

Offsets: 0x048, 0x04c, ..., 0x0c0, 0x0c4

Table 380. INSTR_MEM0, INSTR_MEM1, ..., INSTR_MEM30, INSTR_MEM31 Registers

Bits	Description	Type	Reset
31:16	Reserved.	-	-
15:0	Write-only access to instruction memory location *N*	WO	0x0000

PIO: SM0_CLKDIV, SM1_CLKDIV, SM2_CLKDIV, SM3_CLKDIV Registers

Offsets: 0x0c8, 0x0e0, 0x0f8, 0x110

Description

Clock divisor register for state machine *N*
Frequency = clock freq / (CLKDIV_INT + CLKDIV_FRAC / 256)

Table 381. SM0_CLKDIV, SM1_CLKDIV, SM2_CLKDIV, SM3_CLKDIV Registers

Bits	Description	Type	Reset
31:16	**INT**: Effective frequency is sysclk/(int + frac/256). Value of 0 is interpreted as 65536. If INT is 0, FRAC must also be 0.	RW	0x0001
15:8	**FRAC**: Fractional part of clock divisor	RW	0x00
7:0	Reserved.	-	-

PIO: SM0_EXECCTRL, SM1_EXECCTRL, SM2_EXECCTRL, SM3_EXECCTRL Registers

Offsets: 0x0cc, 0x0e4, 0x0fc, 0x114

Description

Execution/behavioural settings for state machine *N*

Table 382. SM0_EXECCTRL, SM1_EXECCTRL, SM2_EXECCTRL, SM3_EXECCTRL Registers

Bits	Description	Type	Reset
31	**EXEC_STALLED**: If 1, an instruction written to SMx_INSTR is stalled, and latched by the state machine. Will clear to 0 once this instruction completes.	RO	0x0
30	**SIDE_EN**: If 1, the MSB of the Delay/Side-set instruction field is used as side-set enable, rather than a side-set data bit. This allows instructions to perform side-set optionally, rather than on every instruction, but the maximum possible side-set width is reduced from 5 to 4. Note that the value of PINCTRL_SIDESET_COUNT is inclusive of this enable bit.	RW	0x0
29	**SIDE_PINDIR**: If 1, side-set data is asserted to pin directions, instead of pin values	RW	0x0
28:24	**JMP_PIN**: The GPIO number to use as condition for JMP PIN. Unaffected by input mapping.	RW	0x00
23:19	**OUT_EN_SEL**: Which data bit to use for inline OUT enable	RW	0x00
18	**INLINE_OUT_EN**: If 1, use a bit of OUT data as an auxiliary write enable When used in conjunction with OUT_STICKY, writes with an enable of 0 will deassert the latest pin write. This can create useful masking/override behaviour due to the priority ordering of state machine pin writes (SM0 < SM1 < ...)	RW	0x0
17	**OUT_STICKY**: Continuously assert the most recent OUT/SET to the pins	RW	0x0
16:12	**WRAP_TOP**: After reaching this address, execution is wrapped to wrap_bottom. If the instruction is a jump, and the jump condition is true, the jump takes priority.	RW	0x1f

Bits	Description	Type	Reset
11:7	**WRAP_BOTTOM**: After reaching wrap_top, execution is wrapped to this address.	RW	0x00
6:5	Reserved.	-	-
4	**STATUS_SEL**: Comparison used for the MOV x, STATUS instruction.	RW	0x0
	Enumerated values:		
	0x0 → TXLEVEL: All-ones if TX FIFO level < N, otherwise all-zeroes		
	0x1 → RXLEVEL: All-ones if RX FIFO level < N, otherwise all-zeroes		
3:0	**STATUS_N**: Comparison level for the MOV x, STATUS instruction	RW	0x0

PIO: SM0_SHIFTCTRL, SM1_SHIFTCTRL, SM2_SHIFTCTRL, SM3_SHIFTCTRL Registers

Offsets: 0x0d0, 0x0e8, 0x100, 0x118

Description

Control behaviour of the input/output shift registers for state machine *N*

Table 383. SM0_SHIFTCTRL, SM1_SHIFTCTRL, SM2_SHIFTCTRL, SM3_SHIFTCTRL Registers

Bits	Description	Type	Reset
31	**FJOIN_RX**: When 1, RX FIFO steals the TX FIFO's storage, and becomes twice as deep. TX FIFO is disabled as a result (always reads as both full and empty). FIFOs are flushed when this bit is changed.	RW	0x0
30	**FJOIN_TX**: When 1, TX FIFO steals the RX FIFO's storage, and becomes twice as deep. RX FIFO is disabled as a result (always reads as both full and empty). FIFOs are flushed when this bit is changed.	RW	0x0
29:25	**PULL_THRESH**: Number of bits shifted out of OSR before autopull, or conditional pull (PULL IFEMPTY), will take place. Write 0 for value of 32.	RW	0x00
24:20	**PUSH_THRESH**: Number of bits shifted into ISR before autopush, or conditional push (PUSH IFFULL), will take place. Write 0 for value of 32.	RW	0x00
19	**OUT_SHIFTDIR**: 1 = shift out of output shift register to right. 0 = to left.	RW	0x1
18	**IN_SHIFTDIR**: 1 = shift input shift register to right (data enters from left). 0 = to left.	RW	0x1
17	**AUTOPULL**: Pull automatically when the output shift register is emptied, i.e. on or following an OUT instruction which causes the output shift counter to reach or exceed PULL_THRESH.	RW	0x0
16	**AUTOPUSH**: Push automatically when the input shift register is filled, i.e. on an IN instruction which causes the input shift counter to reach or exceed PUSH_THRESH.	RW	0x0
15:0	Reserved.	-	-

PIO: SM0_ADDR, SM1_ADDR, SM2_ADDR, SM3_ADDR Registers

Offsets: 0x0d4, 0x0ec, 0x104, 0x11c

Table 384. SM0_ADDR, SM1_ADDR, SM2_ADDR, SM3_ADDR Registers

Bits	Description	Type	Reset
31:5	Reserved.	-	-
4:0	Current instruction address of state machine *N*	RO	0x00

PIO: SM0_INSTR, SM1_INSTR, SM2_INSTR, SM3_INSTR Registers

Offsets: 0x0d8, 0x0f0, 0x108, 0x120

Table 385. SM0_INSTR, SM1_INSTR, SM2_INSTR, SM3_INSTR Registers

Bits	Description	Type	Reset
31:16	Reserved.	-	-
15:0	Read to see the instruction currently addressed by state machine *N*'s program counter. Write to execute an instruction immediately (including jumps) and then resume execution.	RW	-

PIO: SM0_PINCTRL, SM1_PINCTRL, SM2_PINCTRL, SM3_PINCTRL Registers

Offsets: 0x0dc, 0x0f4, 0x10c, 0x124

Description

State machine pin control

Table 386. SM0_PINCTRL, SM1_PINCTRL, SM2_PINCTRL, SM3_PINCTRL Registers

Bits	Description	Type	Reset
31:29	**SIDESET_COUNT**: The number of MSBs of the Delay/Side-set instruction field which are used for side-set. Inclusive of the enable bit, if present. Minimum of 0 (all delay bits, no side-set) and maximum of 5 (all side-set, no delay).	RW	0x0
28:26	**SET_COUNT**: The number of pins asserted by a SET. In the range 0 to 5 inclusive.	RW	0x5
25:20	**OUT_COUNT**: The number of pins asserted by an OUT PINS, OUT PINDIRS or MOV PINS instruction. In the range 0 to 32 inclusive.	RW	0x00
19:15	**IN_BASE**: The pin which is mapped to the least-significant bit of a state machine's IN data bus. Higher-numbered pins are mapped to consecutively more-significant data bits, with a modulo of 32 applied to pin number.	RW	0x00
14:10	**SIDESET_BASE**: The lowest-numbered pin that will be affected by a side-set operation. The MSBs of an instruction's side-set/delay field (up to 5, determined by SIDESET_COUNT) are used for side-set data, with the remaining LSBs used for delay. The least-significant bit of the side-set portion is the bit written to this pin, with more-significant bits written to higher-numbered pins.	RW	0x00
9:5	**SET_BASE**: The lowest-numbered pin that will be affected by a SET PINS or SET PINDIRS instruction. The data written to this pin is the least-significant bit of the SET data.	RW	0x00
4:0	**OUT_BASE**: The lowest-numbered pin that will be affected by an OUT PINS, OUT PINDIRS or MOV PINS instruction. The data written to this pin will always be the least-significant bit of the OUT or MOV data.	RW	0x00

PIO: INTR Register

Offset: 0x128

Description

Raw Interrupts

Table 387. INTR Register

Bits	Description	Type	Reset
31:12	Reserved.	-	-
11	**SM3**	RO	0x0
10	**SM2**	RO	0x0
9	**SM1**	RO	0x0
8	**SM0**	RO	0x0
7	**SM3_TXNFULL**	RO	0x0
6	**SM2_TXNFULL**	RO	0x0
5	**SM1_TXNFULL**	RO	0x0
4	**SM0_TXNFULL**	RO	0x0
3	**SM3_RXNEMPTY**	RO	0x0
2	**SM2_RXNEMPTY**	RO	0x0
1	**SM1_RXNEMPTY**	RO	0x0
0	**SM0_RXNEMPTY**	RO	0x0

PIO: IRQ0_INTE Register

Offset: 0x12c

Description

Interrupt Enable for irq0

Table 388. IRQ0_INTE Register

Bits	Description	Type	Reset
31:12	Reserved.	-	-
11	**SM3**	RW	0x0
10	**SM2**	RW	0x0
9	**SM1**	RW	0x0
8	**SM0**	RW	0x0
7	**SM3_TXNFULL**	RW	0x0
6	**SM2_TXNFULL**	RW	0x0
5	**SM1_TXNFULL**	RW	0x0
4	**SM0_TXNFULL**	RW	0x0
3	**SM3_RXNEMPTY**	RW	0x0
2	**SM2_RXNEMPTY**	RW	0x0
1	**SM1_RXNEMPTY**	RW	0x0
0	**SM0_RXNEMPTY**	RW	0x0

PIO: IRQ0_INTF Register

Offset: 0x130

Description

Interrupt Force for irq0

Table 389. IRQ0_INTF Register

Bits	Description	Type	Reset
31:12	Reserved.	-	-
11	**SM3**	RW	0x0
10	**SM2**	RW	0x0
9	**SM1**	RW	0x0
8	**SM0**	RW	0x0
7	**SM3_TXNFULL**	RW	0x0
6	**SM2_TXNFULL**	RW	0x0
5	**SM1_TXNFULL**	RW	0x0
4	**SM0_TXNFULL**	RW	0x0
3	**SM3_RXNEMPTY**	RW	0x0
2	**SM2_RXNEMPTY**	RW	0x0
1	**SM1_RXNEMPTY**	RW	0x0
0	**SM0_RXNEMPTY**	RW	0x0

PIO: IRQ0_INTS Register

Offset: 0x134

Description

Interrupt status after masking & forcing for irq0

Table 390. IRQ0_INTS Register

Bits	Description	Type	Reset
31:12	Reserved.	-	-
11	**SM3**	RO	0x0
10	**SM2**	RO	0x0
9	**SM1**	RO	0x0
8	**SM0**	RO	0x0
7	**SM3_TXNFULL**	RO	0x0
6	**SM2_TXNFULL**	RO	0x0
5	**SM1_TXNFULL**	RO	0x0
4	**SM0_TXNFULL**	RO	0x0
3	**SM3_RXNEMPTY**	RO	0x0
2	**SM2_RXNEMPTY**	RO	0x0
1	**SM1_RXNEMPTY**	RO	0x0
0	**SM0_RXNEMPTY**	RO	0x0

PIO: IRQ1_INTE Register

Offset: 0x138

Description

Interrupt Enable for irq1

Table 391. IRQ1_INTE Register

Bits	Description	Type	Reset
31:12	Reserved.	-	-
11	**SM3**	RW	0x0
10	**SM2**	RW	0x0
9	**SM1**	RW	0x0
8	**SM0**	RW	0x0
7	**SM3_TXNFULL**	RW	0x0
6	**SM2_TXNFULL**	RW	0x0
5	**SM1_TXNFULL**	RW	0x0
4	**SM0_TXNFULL**	RW	0x0
3	**SM3_RXNEMPTY**	RW	0x0
2	**SM2_RXNEMPTY**	RW	0x0
1	**SM1_RXNEMPTY**	RW	0x0
0	**SM0_RXNEMPTY**	RW	0x0

PIO: IRQ1_INTF Register

Offset: 0x13c

Description

Interrupt Force for irq1

Table 392. IRQ1_INTF Register

Bits	Description	Type	Reset
31:12	Reserved.	-	-
11	**SM3**	RW	0x0
10	**SM2**	RW	0x0
9	**SM1**	RW	0x0
8	**SM0**	RW	0x0
7	**SM3_TXNFULL**	RW	0x0
6	**SM2_TXNFULL**	RW	0x0
5	**SM1_TXNFULL**	RW	0x0
4	**SM0_TXNFULL**	RW	0x0
3	**SM3_RXNEMPTY**	RW	0x0
2	**SM2_RXNEMPTY**	RW	0x0
1	**SM1_RXNEMPTY**	RW	0x0
0	**SM0_RXNEMPTY**	RW	0x0

PIO: IRQ1_INTS Register

Offset: 0x140

Description

Interrupt status after masking & forcing for irq1

Table 393. IRQ1_INTS Register

Bits	Description	Type	Reset
31:12	Reserved.	-	-
11	**SM3**	RO	0x0
10	**SM2**	RO	0x0
9	**SM1**	RO	0x0
8	**SM0**	RO	0x0
7	**SM3_TXNFULL**	RO	0x0
6	**SM2_TXNFULL**	RO	0x0
5	**SM1_TXNFULL**	RO	0x0
4	**SM0_TXNFULL**	RO	0x0
3	**SM3_RXNEMPTY**	RO	0x0
2	**SM2_RXNEMPTY**	RO	0x0
1	**SM1_RXNEMPTY**	RO	0x0
0	**SM0_RXNEMPTY**	RO	0x0

Chapter 4. Peripherals

4.1. USB

4.1.1. Overview

> **Prerequisite Knowledge Required**
>
> This section requires knowledge of the USB protocol. We recommend USB Made Simple if you are unclear on the terminology used in this section.

RP2040 contains a USB 2.0 controller that can operate as either:

- a Full Speed device (12Mbps)
- a host that can communicate with both Low Speed (1.5Mbps) and Full Speed devices. This includes multiple downstream devices connected to a USB hub.

There is an integrated USB 1.1 PHY which interfaces the USB controller with the `DP` and `DM` pins of the chip.

4.1.1.1. Features

The USB controller hardware handles the low level USB protocol, meaning the main job of the programmer is to configure the controller and then provide / consume data buffers in response to events on the bus. The controller interrupts the processor when it needs attention. The USB controller has 4kB of DPSRAM which is used for configuration and data buffers.

4.1.1.1.1. Device Mode

- USB 2.0-compatible Full Speed device (12Mbps)
- Supports up to 32 endpoints (Endpoints 0 → 15 in both in and out directions)
- Supports `Control`, `Isochronous`, `Bulk`, and `Interrupt` endpoint types
- Supports double buffering
- 3840 bytes of usable buffer space in DPSRAM. This is equivalent to 60 × 64-byte buffers.

4.1.1.1.2. Host Mode

- Can communicate with Full Speed (12Mbps) devices and Low Speed devices (1.5Mbps)
- Can communicate with multiple devices via a USB hub, including Low Speed devices connected to a Full Speed hub
- Can poll up to 15 interrupt endpoints in hardware. (Interrupt endpoints are used by hubs to notify the host of connect/disconnect events, mice to notify the host of movement etc.)

4.1.2. Architecture

4.1.2.1. Clock speed

This controller requires `clk_usb` to be running at 48MHz.

NOTE

`clk_sys` must also be running at > 48MHz. See RP2040-E16.

4.1.2.2. Overview

Figure 57. A simplified overview of the USB controller architecture.

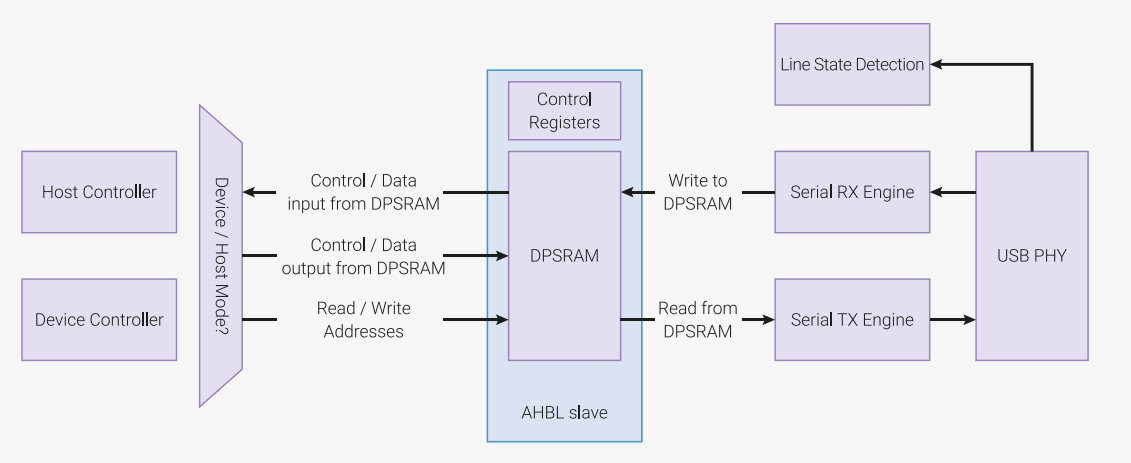

The USB controller is an area efficient design that muxes a device controller or host controller onto a common set of components. Each component is detailed below.

4.1.2.3. USB PHY

The USB PHY provides the electrical interface between the USB `DP` and `DM` pins and the digital logic of the controller. The `DP` and `DM` pins are a differential pair, meaning the values are always the inverse of each other, except to encode a specific line state (`SE0`, etc). The USB PHY drives the `DP` and `DM` pins to transmit data, as well as performing a differential receive of any incoming data. The USB PHY provides both single-ended and differential receive data to the line state detection module.

The USB PHY has built in pull-up and pull-down resistors. If the controller is acting as a Full Speed device then the `DP` pin is pulled up to indicate to the host that a Full Speed device has been connected. In host mode, a weak pull down is applied to `DP` and `DM` so that the lines are pulled to a logical zero until the device pulls up `DP` for Full Speed or `DM` for Low Speed.

4.1.2.4. Line state detection

The [2] defines several line states (Bus Reset, Connected, Suspend, Resume, Data 1, Data 0, etc) that need to be detected. The line state detection module has several state machines to detect these states and signal events to the other hardware components. There is no shared clock signal in USB, so the RX data must be sampled by an internal clock. The maximum data rate of USB Full Speed is 12Mbps. The RX data is sampled at 48MHz, giving 4 clock cycles to capture and filter the bus state. The line state detection module distributes the filtered RX data to the Serial RX Engine.

4.1.2.5. Serial RX Engine

The serial receive engine decodes receive data captured by the line state detection module. It produces the following information:

- The PID of the incoming data packet
- The device address for the incoming data
- The device endpoint for the incoming data
- Data bytes

The serial receive engine also detects errors in RX data by performing a CRC check on the incoming data. Any errors are signalled to the other hardware blocks and can raise an interrupt.

NOTE

If you disconnect the USB cable during a packet in either host or device mode you will see errors raised by the hardware. Your software will need to take this scenario into account if you enable error interrupts.

4.1.2.6. Serial TX Engine

The serial transmit engine is a mirror of the serial receive engine. It is connected to the currently active controller (either device or host). It creates TOKEN and DATA packets, including calculating the CRC, and transmits them on the bus.

4.1.2.7. DPSRAM

The USB controller has 4kB (4096 bytes) of DPSRAM (Dual Port SRAM). The DPSRAM is used to store control registers and data buffers. The DPSRAM is accessible as a 32-bit wide memory at address 0 of the USB controller (0x50100000).

The DPSRAM has the following characteristics, which are different to most registers on RP2040:

- Supports 8/16/32-bit accesses. Registers typically support 32-bit accesses only
- The DPSRAM does not support set / clear aliases. RP2040 registers typically support these

Data Buffers are typically 64 bytes long as this is the max normal packet size for most FS packets. For Isochronous endpoints a maximum buffer size of 1023 bytes is supported. For other packet types the maximum size is 64 bytes per buffer.

4.1.2.7.1. Concurrent access

The DPSRAM in the USB controller should be considered asynchronous and not atomic. It is a dual port SRAM which means the processor has a port to read/write the memory and the USB controller also has a port to read/write the memory. This means that both the processor and the USB controller can access the same memory address at the same time. One could be writing and one could be reading. It is possible to get inconsistent data if the controller is reading the memory while the processor is writing the memory. Care must be taken to avoid this scenario.

The AVAILABLE bit in the buffer control register is used to indicate who has ownership of a buffer. This bit should be set to 1 by the processor to give the controller ownership of the buffer. The controller will set the bit back to 0 when it has used the buffer. The AVAILABLE bit should be set separately to the rest of the data in the buffer control register, so that the rest of the data in the buffer control register is accurate when the AVAILABLE bit is set.

This is necessary because the processor clock clk_sys can be running several times faster than the clk_usb clock. Therefore clk_sys can update the data **during** a read by the USB controller on a slower clock. The correct process is:

- Write buffer information (length, etc.) to buffer control register

- nop for some clk_sys cycles to ensure that at least one clk_usb cycle has passed. For example if clk_sys was running at 125MHz and clk_usb was running at 48MHz then 125/48 rounded up would be 3 nop instructions
- Set AVAILABLE bit

If clk_sys and clk_usb are running at the same frequency then it is not necessary to set the AVAILABLE bit separately.

NOTE

When the controller is writing status back to the DPSRAM it does a 16 bit write to the lower 2 bytes for buffer 0 and the upper 2 bytes for buffer 1. Therefore, if using double buffered mode, it is safest to treat the buffer control register as two 16 bit registers when updating it in software.

4.1.2.7.2. Layout

Addresses 0x0-0xff are used for control registers containing configuration data. The remaining space, addresses 0x100-0xfff (3840 bytes) can be used for data buffers. The controller has control registers that start at address 0x10000.

The memory layout is different depending on if the controller is in Device or Host mode. In device mode, there are multiple endpoints a host can access so there must be endpoint control and buffer control registers for each endpoint. In host mode, the host software running on the processor is deciding which endpoints and which devices to access, so there only needs to be one set of endpoint control and buffer control registers. As well as software driven transfers, the host controller can poll up to 15 interrupt endpoints and has a register for each of these interrupt endpoints.

Table 394. DPSRAM layout

Offset	Device Function	Host Function
0x0	Setup packet (8 bytes)	
0x8	EP1 in control	Interrupt endpoint control 1
0xc	EP1 out control	Spare
0x10	EP2 in control	Interrupt endpoint control 2
0x14	EP2 out control	Spare
0x18	EP3 in control	Interrupt endpoint control 3
0x1c	EP3 out control	Spare
0x20	EP4 in control	Interrupt endpoint control 4
0x24	EP4 out control	Spare
0x28	EP5 in control	Interrupt endpoint control 5
0x2c	EP5 out control	Spare
0x30	EP6 in control	Interrupt endpoint control 6
0x34	EP6 out control	Spare
0x38	EP7 in control	Interrupt endpoint control 7
0x3c	EP7 out control	Spare
0x40	EP8 in control	Interrupt endpoint control 8
0x44	EP8 out control	Spare
0x48	EP9 in control	Interrupt endpoint control 9
0x4c	EP9 out control	Spare
0x50	EP10 in control	Interrupt endpoint control 10
0x54	EP10 out control	Spare

Offset	Device Function	Host Function
0x58	EP11 in control	Interrupt endpoint control 11
0x5c	EP11 out control	Spare
0x60	EP12 in control	Interrupt endpoint control 12
0x64	EP12 out control	Spare
0x68	EP13 in control	Interrupt endpoint control 13
0x6c	EP13 out control	Spare
0x70	EP14 in control	Interrupt endpoint control 14
0x74	EP14 out control	Spare
0x78	EP15 in control	Interrupt endpoint control 15
0x7c	EP15 out control	Spare
0x80	EP0 in buffer control	EPx buffer control
0x84	EP0 out buffer control	Spare
0x88	EP1 in buffer control	Interrupt endpoint buffer control 1
0x8c	EP1 out buffer control	Spare
0x90	EP2 in buffer control	Interrupt endpoint buffer control 2
0x94	EP2 out buffer control	Spare
0x98	EP3 in buffer control	Interrupt endpoint buffer control 3
0x9c	EP3 out buffer control	Spare
0xa0	EP4 in buffer control	Interrupt endpoint buffer control 4
0xa4	EP4 out buffer control	Spare
0xa8	EP5 in buffer control	Interrupt endpoint buffer control 5
0xac	EP5 out buffer control	Spare
0xb0	EP6 in buffer control	Interrupt endpoint buffer control 6
0xb4	EP6 out buffer control	Spare
0xb8	EP7 in buffer control	Interrupt endpoint buffer control 7
0xbc	EP7 out buffer control	Spare
0xc0	EP8 in buffer control	Interrupt endpoint buffer control 8
0xc4	EP8 out buffer control	Spare
0xc8	EP9 in buffer control	Interrupt endpoint buffer control 9
0xcc	EP9 out buffer control	Spare
0xd0	EP10 in buffer control	Interrupt endpoint buffer control 10
0xd4	EP10 out buffer control	Spare
0xd8	EP11 in buffer control	Interrupt endpoint buffer control 11
0xdc	EP11 out buffer control	Spare
0xe0	EP12 in buffer control	Interrupt endpoint buffer control 12
0xe4	EP12 out buffer control	Spare

Offset	Device Function	Host Function
0xe8	EP13 in buffer control	Interrupt endpoint buffer control 13
0xec	EP13 out buffer control	Spare
0xf0	EP14 in buffer control	Interrupt endpoint buffer control 14
0xf4	EP14 out buffer control	Spare
0xf8	EP15 in buffer control	Interrupt endpoint buffer control 15
0xfc	EP15 out buffer control	Spare
0x100	EP0 buffer 0 (shared between in and out)	EPx control
0x140	Optional EP0 buffer 1	Spare
0x180	Data buffers	

4.1.2.7.3. Endpoint control register

The endpoint control register is used to configure an endpoint. It contains:

- The endpoint type
- The base address of its data buffer, or data buffers if double buffered
- Interrupts events on the endpoint should trigger

A device must support Endpoint 0 so that it can reply to SETUP packets and be enumerated. As a result, there is no endpoint control register for EP0. Its buffers begin at `0x100`. All other endpoints can have either single or dual buffers and are mapped at the base address programmed. As EP0 has no endpoint control register, the interrupt enable controls for EP0 come from SIE_CTRL.

Table 395. Endpoint control register layout

Bit(s)	Device Function	Host Function
31	Endpoint Enable	
30	Single buffered (64 bytes) = 0, Double buffered (64 bytes x 2) = 1	
29	Enable Interrupt for every transferred buffer	
28	Enable Interrupt for every 2 transferred buffers (valid for double buffered only)	
27:26	Endpoint Type: Control = 0, ISO = 1, Bulk = 2, Interrupt = 3	
25:18	N/A	The interval the host controller should poll this endpoint. Only applicable for interrupt endpoints. Specified in ms - 1. For example: a value of 9 would poll the endpoint every 10ms.
17	Interrupt on Stall	
16	Interrupt on NAK	
15:6	Address base offset in DPSRAM of data buffer(s)	

NOTE

The data buffer base address must be 64-byte aligned as bits 0-5 are ignored

4.1.2.7.4. Buffer control register

The buffer control register contains information about the state of the data buffers for that endpoint. It is shared between the processor and the controller. If the endpoint is configured to be single buffered, only the first half (bits 0-15) of the buffer are used.

If double buffering, the buffer select starts at buffer 0. From then on, the buffer select flips between buffer 0 and 1 unless the "reset buffer select" bit is set (which resets the buffer select to buffer 0). The value of the buffer select is internal to the controller and not accessible by the processor.

For host interrupt and isochronous packets on EPx, the buffer full bit will be set on completion even if the transfer was unsuccessful. The error bits in the SIE_STATUS register can be read to determine the error.

Table 396. Buffer control register layout

Bit(s)	Function
31	Buffer 1 full. Should be set to 1 by the processor for an `IN` transaction and 0 for an `OUT` transaction. The controller sets this to 1 for an `OUT` transaction because it has filled the buffer. The controller sets it to 0 for an `IN` transaction because it has emptied the buffer. Only valid for double buffered
30	Last buffer of transfer for buffer 1 - only valid for double buffered
29	Data PID for buffer 1 - DATA0 = 0, DATA1 = 1 - only valid for double buffered
27:28	Double buffer offset for Isochronous mode (0 = 128, 1 = 256, 2 = 512, 3 = 1024)
26	Buffer 1 available. Whether the buffer can be used by the controller for a transfer. The processor sets this to 1 when the buffer is configured. The controller sets to 0 when it has used the buffer. i.e. has sent the data to the host for an `IN` transaction or has filled the buffer with data from the host for an `OUT` transaction. Only valid for double buffered.
25:16	Buffer 1 transfer length - only valid for double buffered
15	Buffer 0 full. Should be set to 1 by the processor for an `IN` transaction and 0 for an `OUT` transaction. The controller sets this to 1 for an `OUT` transaction because it has filled the buffer. The controller sets it to 0 for an `IN` transaction because it has emptied the buffer.
14	Last buffer of transfer for buffer 0
13	Data PID for buffer 0 - DATA0 = 0, DATA1 = 1
12	Reset buffer select to buffer 0 - cleared at end of transfer. For DEVICE ONLY
11	Send STALL for device, STALL received for host
10	Buffer 0 available. Whether the buffer can be used by the controller for a transfer. The processor sets this to 1 when the buffer is configured. The controller sets to 0 when it has used the buffer. i.e. has sent the data to the host for an `IN` transaction or has filled the buffer with data from the host for an `OUT` transaction.
9:0	Buffer 0 transfer length

WARNING

If running `clk_sys` and `clk_usb` at different speeds, the available and stall bits should be set after the other data in the buffer control register. Otherwise the controller may initiate a transaction with data from a previous packet. That is to say, the controller could see the available bit set but get the data pid or length from the previous packet.

4.1.2.8. Device Controller

This section details how the device controller operates when it receives various packet types from the host.

4.1.2.8.1. SETUP

The device controller **MUST** always accept a setup packet from the host. That is why the first 8 bytes of the DPSRAM has dedicated space for the setup packet.

The [2] states that receiving a setup packet also clears any stall bits on EP0. For this reason, the stall bits for EP0 are gated with two bits in the EP_STALL_ARM register. These bits are cleared when a setup packet is received. This means that to send a stall on EP0, you have to set both the stall bit in the buffer control register, and the appropriate bit in EP_STALL_ARM.

Barring any errors, the setup packet will be put into the setup packet buffer at DPSRAM offset `0x0`. The device controller will then reply with an ACK.

Finally, SIE_STATUS.SETUP_REC is set to indicate that a setup packet has been received. This will trigger an interrupt if the programmer has enabled the SETUP_REC interrupt (see INTE).

4.1.2.8.2. IN

From the device's point of view, an `IN` transfer means transferring data **INTO** the host. When an `IN` token is received from the host the request is handled as follows:

TOKEN phase:

- If `STALL` is set in the buffer control register (and if EP0, the appropriate EP_STALL_ARM bit is set) then send a `STALL` response and go back to idle.
- If `AVAILABLE` and `FULL` bits are set in buffer control move to the phase
- Otherwise send `NAK` unless this is an Isochronous endpoint, in which case go to idle.

DATA phase:

- Send DATA. If Isochronous go to idle. Otherwise move to ACK phase.

ACK phase:

- Wait for `ACK` packet from host. If there is a timeout then raise a timeout error. If `ACK` is received then the packet is done, so move to status phase.

STATUS phase:

- If this was the last buffer in the transfer (i.e. if the `LAST_BUFFER` bit in the buffer control register was set), set SIE_STATUS.TRANS_COMPLETE.
- If the endpoint is double buffered, flip the buffer select to the other buffer.
- Set a bit in BUFF_STATUS to indicate the buffer is done. When handling this event, the programmer should read BUFF_CPU_SHOULD_HANDLE to see if it is buffer 0 or buffer 1 that is finished. If the endpoint is double buffered it is possible to have both buffers done. The cleared BUFF_STATUS bit will be set again, and BUFF_CPU_SHOULD_HANDLE will change in this instance.
- Update status in the appropriate half of the buffer control register: length, pid, and last_buff are set. Everything else is written to zero.

If a `NAK` gets sent to the host the host will retry again later.

4.1.2.8.3. OUT

When an `OUT` token is received from the host, the request is handled as follows:

TOKEN phase:

- Is the DATA pid what is specified in the buffer control register? If not raise SIE_STATUS.DATA_SEQ_ERROR. (The data pid for an Isochronous endpoint is not checked because Isochronous data is always sent with a `DATA0` pid.)
- Is the `AVAILABLE` bit set and the `FULL` bit unset. If so go to the data phase, unless the `STALL` bit is set in which case the device controller will reply with a `STALL`.

DATA phase:

- Store received data in buffer. If Isochronous go to STATUS phase. Otherwise go to ACK phase.

ACK phase:

- Send ACK. Go to STATUS phase.

STATUS phase:

See status phase from Section 4.1.2.8.2. The only difference is that the FULL bit is set in the buffer control register to indicate that data has been received whereas in the IN case the FULL bit is cleared to indicate that data has been sent.

4.1.2.8.4. Suspend and Resume

The USB device controller supports both suspend and resume, as well as remote resume (triggered with SIE_CTRL.RESUME), where the device initiates the resume. There is an interrupt / status bit in SIE_STATUS. It is not necessary to enable the suspend and resume interrupts, as most devices do not need to care about suspend and resume.

The device goes into suspend when it does not see any start of frame packets (transmitted every 1ms) from the host.

NOTE

If you enable the suspend interrupt, it is likely you will see a suspend interrupt when the device is first connected but the bus is idle. The bus can be idle for a few ms before the host begins sending start of frame packets. You will also see a suspend interrupt when the device is disconnected if you do not have a VBUS detect circuit connected. This is because without VBUS detection, it is impossible to tell the difference between being disconnected and suspended.

4.1.2.8.5. Errata

There are two hardware issues with the device controller, both of which have software workarounds on RP2040B0, RP2040B1, and are fixed in hardware on RP2040B2. See RP2040-E2 and RP2040-E5 for more information.

4.1.2.9. Host Controller

The host controller design is similar to the device controller. All transactions are started by the host, so the host is always dealing with transactions it has started. For this reason there is only one set of endpoint control / endpoint buffer control registers. There is also additional hardware to poll interrupt endpoints in the background when there are no software controlled transactions taking place.

The host needs to send keep-alive packets to the device every 1ms to keep the device from suspending. In Full Speed mode this is done by sending a SOF (start of frame) packet. In Low Speed mode, an EOP (end of packet) is sent. When setting up the controller, SIE_CTRL.KEEP_ALIVE_EN and SIE_CTRL.SOF_EN should be set to enable these packets.

Several bits in SIE_CTRL are used to begin a host transaction:

- SEND_SETUP - Send a setup packet. This is typically used in conjunction with RECEIVE_TRANS so the setup packet will be sent followed by the additional data transaction expected from the device.
- SEND_TRANS - This transfer is OUT from the host
- RECEIVE_TRANS - This transfer is IN to the host
- START_TRANS - Start the transfer - non-latching
- STOP_TRANS - Stop the current transfer - non-latching
- PREAMBLE_ENABLE - Use this to send a packet to a Low Speed device on a Full Speed hub. This will send a PRE token packet before every packet the host sends (i.e. pre, token, pre, data, pre, ack).
- SOF_SYNC - The SOF Sync bit is used to delay the transaction until after the next SOF. This is useful for interrupt and isochronous endpoints. The Host controller prevents a transaction of 64bytes from clashing with the SOF packets.

For longer Isochronous packet the software is responsible for preventing a collision by using the SOF Sync bit and limiting the number of packets sent in one frame. If a transaction is set up with multiple packets the SOF Sync bit only applies to the first packet.

WARNING

The START_TRANS bit is synchronised separately to other control bits in the SIE_CTRL register. The START_TRANS bit should be set separately to the rest of the data in the SIE_CTRL register, so that the register contents are stable when the controller is prompted to start a transfer. This is necessary because the processor clock clk_sys can be asynchronous to the clk_usb clock.

- Write fields in SIE_CTRL apart from START_TRANS
- nop for some clk_sys cycles to ensure that at least two clk_usb cycles have passed. For example if clk_sys was running at 125MHz and clk_usb was running at 48MHz then 125/48 rounded up would be 6 nop instructions
- Set the START_TRANS bit.

4.1.2.9.1. SETUP

The SETUP packet sent from the host always comes from the dedicated 8 bytes of space at offset 0x0 of the DPSRAM. Like the device controller, there are no control registers associated with the setup packet. The parameters are hard coded and loaded into the hardware when you write to START_TRANS with the SEND_SETUP bit set. Once the setup packet has been sent, the host state machine will wait for an ACK from the device. If there is a timeout then an RX_TIMEOUT error will be raised. If the SEND_TRANS bit is set then the host state machine will move to the OUT phase. Most commonly the SEND_SETUP packet is used in conjunction with the RECEIVE_TRANS bit and will therefore move to the IN phase after sending a setup packet.

4.1.2.9.2. IN

An IN transfer is triggered with the RECEIVE_TRANS bit set when the START_TRANS bit is set. This may be preceded by a SETUP packet being sent if the SEND_SETUP bit was set.

CONTROL phase:

- Read *EPx control* register located at 0x80 to get the endpoint information:
  - Are we double buffered?
  - What interrupts to enable
  - Base address of the data buffer, or data buffers if in double buffered mode
  - Endpoint type
- Read *EPx buffer control* register at 0x100 to get the endpoint buffer information such as transfer length and data pid. The host state machine still checks for the presence of the AVAILABLE bit, so this needs to be set and FULL needs to be unset. The transaction will not happen until this is the case.

TOKEN phase:

- Send the IN token packet to the device. The target device address and endpoint come from the ADDR_ENDP register.

DATA phase:

- Receive the first data packet from the device. Raise RX timeout error if the device doesn't reply. Raise DATA SEQ ERROR if the data packet has wrong DATA PID.

ACK phase:

- Send ACK to device

STATUS phase:

- Set BUFF_STATUS bit and update buffer control register. Will set FULL, LAST_BUFF if applicable, DATA_PID, WR_LEN. TRANS_COMPLETE will be set if this is the last buffer in the transfer.

CONTROL phase (pt 2):

- The host state machine will keep performing IN transactions until LAST_BUFF is seen in the buffer_control register. If the host is in double buffered mode then the host controller will toggle between BUF0 and BUF1 sections of the buffer control register. Otherwise it will keep reading the buffer control register for buffer 0 and wait for the FULL to be unset and AVAILABLE to be set before starting the next IN transaction (i.e. wait in the control phase). The device can send a zero length packet to the host to indicate that it has no more data. In which case the host state machine will stop listening for more data regardless of if the LAST_BUFF flag was set or not. The host software can tell this has happened because BUFF_DONE will be set with a data length of 0 in the buffer control register.

WARNING

The USB host controller has a bug (RP2040-E4) that means the status written back to the buffer control register can appear in the wrong half of the register. Bits 0-15 are for buffer 0, and bits 16-31 are for buffer 1. The host controller has a buffer selector that is flipped after each transfer is complete. This buffer selector is incorrectly used when writing status information back to the buffer control register even in single buffered mode. The buffer selector is not used when reading the buffer control register. The implication of this is that host software needs to keep track of the buffer selector and shift the buffer control register to the right by 16 bits if the buffer selector is 1.

For more information, see RP2040-E4.

4.1.2.9.3. OUT

An OUT transfer is triggered with the SEND_TRANS bit set when the START_TRANS bit is set. This may be preceded by a SETUP packet being sent if the SEND_SETUP bit was set.

CONTROL phase:

- Read *EPx control* to get endpoint information (same as Section 4.1.2.9.2)
- Read *EPx buffer control* to get the transfer length, data pid. AVAILABLE and FULL must be set for the transfer to start.

TOKEN phase

- Send OUT packet to the device. The target device address and endpoint come from the ADDR_ENDP register.

DATA phase:

- Send the first data packet to the device. If the endpoint type is Isochronous then there is no ACK phase so the host controller will go straight to status phase. If ACK received then go to status phase. Otherwise:
  - If no reply is received than raise SIE_STATUS.RX_TIMEOUT.
  - If NAK received raise SIE_STATUS.NAK_REC and send the data packet again.
  - If STALL received then raise SIE_STATUS.STALL_REC and go to idle.

STATUS phase:

- Set BUFF_STATUS bit and update buffer control register. FULL will be set to 0. TRANS_COMPLETE will be set if this is the last buffer in the transfer.

WARNING

The bug mentioned above (RP2040-E4) in the IN section also applies to the OUT section.

CONTROL phase (pt 2):

If this isn't the last buffer in the transfer then wait for FULL and AVAILABLE to be set in the *EPx buffer control* register again.

4.1.2.9.4. Interrupt Endpoints

The host controller can poll interrupt endpoints on many devices (up to a maximum of 15 endpoints). To enable these, the programmer must:

- Pick the next free interrupt endpoint slot on the host controller (starting at 1, to a maximum of 15)
- Program the appropriate endpoint control register and buffer control register like you would with a normal IN or OUT transfer. Note that interrupt endpoints are only single buffered so the BUF1 part of the buffer control register is invalid.
- Set the address and endpoint of the device in the appropriate ADDR_ENDP register (ADDR_ENDP1 to ADDR_ENDP15). The preamble bit should be set if the device is Low Speed but attached to a Full Speed hub. The endpoint direction bit should also be set.
- Set the interrupt endpoint active bit in INT_EP_CTRL (i.e. set bit 1 to 15 of that register)

Typically an interrupt endpoint will be an IN transfer. For example, a USB hub would be polled to see if the state of any of its ports have changed. If there is no changed the hub will reply with a NAK to the controller and nothing will happen. Similarly, a mouse will reply with a NAK unless the mouse has been moved since the last time the interrupt endpoint was polled.

Interrupt endpoints are polled by the controller once a SOF packet has been sent by the host controller.

The controller loops from 1 to 15 and will attempt to poll any interrupt endpoint with the EP_ACTIVE bit set to 1 in INT_EP_CTRL. The controller will then read the endpoint control register, and buffer control register to see if there is an available buffer (i.e. FULL + AVAILABLE if an OUT transfer and NOT FULL + AVAILABLE for an IN transfer). If not, the controller will move onto the next interrupt endpoint slot.

If there is an available buffer, then the transfer is dealt with the same as a normal IN or OUT transfer and the BUFF_DONE flag in BUFF_STATUS will be set when the interrupt endpoint has a valid buffer. BUFF_CPU_SHOULD_HANDLE is invalid for interrupt endpoints as there is only a single buffer that can ever be done (RP2040-E3).

4.1.2.10. VBUS Control

The USB controller can be connected up to GPIO pins (see Section 2.19) for the purpose of VBUS control:

- VBUS enable, used to enable VBUS in host mode. VBUS enable is set in SIE_CTRL
- VBUS detect, used to detect that VBUS is present in device mode. VBUS detect is a bit in SIE_STATUS and can also raise a VBUS_DETECT interrupt (enabled in INTE)
- VBUS overcurrent, used to detect an overcurrent event. Applicable to both device and host. VBUS overcurrent is a bit in SIE_STATUS.

It is not necessary to connect up any of these pins to GPIO. The host can permanently supply VBUS and detect a device being connected when either the DP or DM pin is pulled high. VBUS detect can be forced in USB_PWR.

4.1.3. Programmer's Model

4.1.3.1. TinyUSB

The RP2040 TinyUSB port should be considered as the reference implementation for this USB controller. This port can be found in:

https://github.com/hathach/tinyusb/blob/master/src/portable/raspberrypi/rp2040/dcd_rp2040.c

https://github.com/hathach/tinyusb/blob/master/src/portable/raspberrypi/rp2040/hcd_rp2040.c

https://github.com/hathach/tinyusb/blob/master/src/portable/raspberrypi/rp2040/rp2040_usb.h

4.1.3.2. Standalone device example

A standalone USB device example, `dev_lowlevel`, makes it easier to understand how to interact with the USB controller without needing to understand the TinyUSB abstractions. In addition to endpoint 0, the standalone device has two bulk endpoints: EP1 OUT and EP2 IN. The device is designed to send whatever data it receives on EP1 to EP2. The example comes with a small Python script that writes "Hello World" into EP1 and checks that it is correctly received on EP2.

The code included in this section will walk you through setting up to the USB device controller to receive a setup packet, and then respond to the setup packet.

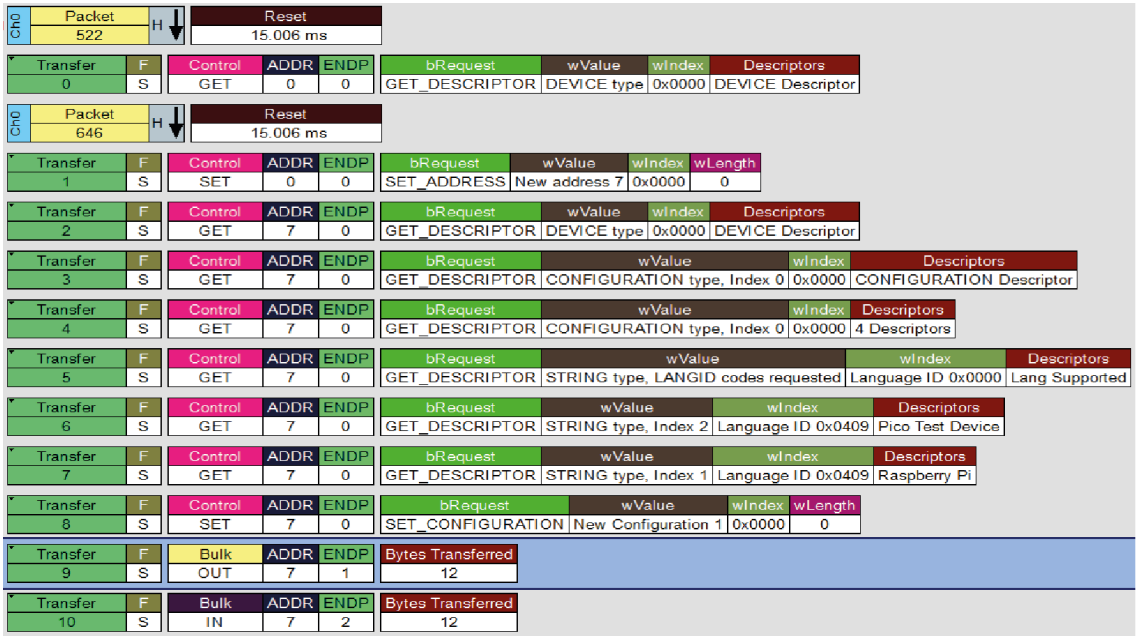

Figure 58. USB analyser trace of the dev_lowlevel USB device example. The control transfers are the device enumeration. The first bulk OUT (out from the host) transfer, highlighted in blue, is the host sending "Hello World" to the device. The second bulk transfer IN (in to the host), is the device returning "Hello World" to the host.

4.1.3.2.1. Device controller initialisation

The following code initialises the USB device.

Pico Examples: https://github.com/raspberrypi/pico-examples/blob/master/usb/device/dev_lowlevel/dev_lowlevel.c Lines 183 - 217

```
183 void usb_device_init() {
184     // Reset usb controller
185     reset_unreset_block_num_wait_blocking(RESET_USBCTRL);
186
187     // Clear any previous state in dpram just in case
188     memset(usb_dpram, 0, sizeof(*usb_dpram)); ①
189
190     // Enable USB interrupt at processor
191     irq_set_enabled(USBCTRL_IRQ, true);
192
193     // Mux the controller to the onboard usb phy
```

```
194     usb_hw->muxing = USB_USB_MUXING_TO_PHY_BITS | USB_USB_MUXING_SOFTCON_BITS;
195
196     // Force VBUS detect so the device thinks it is plugged into a host
197     usb_hw->pwr = USB_USB_PWR_VBUS_DETECT_BITS | USB_USB_PWR_VBUS_DETECT_OVERRIDE_EN_BITS;
198
199     // Enable the USB controller in device mode.
200     usb_hw->main_ctrl = USB_MAIN_CTRL_CONTROLLER_EN_BITS;
201
202     // Enable an interrupt per EP0 transaction
203     usb_hw->sie_ctrl = USB_SIE_CTRL_EP0_INT_1BUF_BITS; ②
204
205     // Enable interrupts for when a buffer is done, when the bus is reset,
206     // and when a setup packet is received
207     usb_hw->inte = USB_INTS_BUFF_STATUS_BITS |
208                    USB_INTS_BUS_RESET_BITS |
209                    USB_INTS_SETUP_REQ_BITS;
210
211     // Set up endpoints (endpoint control registers)
212     // described by device configuration
213     usb_setup_endpoints();
214
215     // Present full speed device by enabling pull up on DP
216     usb_hw_set->sie_ctrl = USB_SIE_CTRL_PULLUP_EN_BITS;
217 }
```

4.1.3.2.2. Configuring the endpoint control registers for EP1 and EP2

The function `usb_configure_endpoints` loops through each endpoint defined in the device configuration (including EP0 in and EP0 out, which don't have an endpoint control register defined) and calls the `usb_configure_endpoint` function. This sets up the endpoint control register for that endpoint:

Pico Examples: https://github.com/raspberrypi/pico-examples/blob/master/usb/device/dev_lowlevel/dev_lowlevel.c Lines 149 - 164

```
149 void usb_setup_endpoint(const struct usb_endpoint_configuration *ep) {
150     printf("Set up endpoint 0x%x with buffer address 0x%p\n", ep->descriptor-
    >bEndpointAddress, ep->data_buffer);
151
152     // EP0 doesn't have one so return if that is the case
153     if (!ep->endpoint_control) {
154         return;
155     }
156
157     // Get the data buffer as an offset of the USB controller's DPRAM
158     uint32_t dpram_offset = usb_buffer_offset(ep->data_buffer);
159     uint32_t reg = EP_CTRL_ENABLE_BITS
160                    | EP_CTRL_INTERRUPT_PER_BUFFER
161                    | (ep->descriptor->bmAttributes << EP_CTRL_BUFFER_TYPE_LSB)
162                    | dpram_offset;
163     *ep->endpoint_control = reg;
164 }
```

4.1.3.2.3. Receiving a setup packet

An interrupt is raised when a setup packet is received, so the interrupt handler must handle this event:

Pico Examples: https://github.com/raspberrypi/pico-examples/blob/master/usb/device/dev_lowlevel/dev_lowlevel.c Lines 494 - 504

```
494 void isr_usbctrl(void) {
495     // USB interrupt handler
496     uint32_t status = usb_hw->ints;
497     uint32_t handled = 0;
498
499     // Setup packet received
500     if (status & USB_INTS_SETUP_REQ_BITS) {
501         handled |= USB_INTS_SETUP_REQ_BITS;
502         usb_hw_clear->sie_status = USB_SIE_STATUS_SETUP_REC_BITS;
503         usb_handle_setup_packet();
504     }
```

The setup packet gets written to the first 8 bytes of the USB ram, so the setup packet handler casts that area of memory to `struct usb_setup_packet *`.

Pico Examples: https://github.com/raspberrypi/pico-examples/blob/master/usb/device/dev_lowlevel/dev_lowlevel.c Lines 383 - 427

```
383 void usb_handle_setup_packet(void) {
384     volatile struct usb_setup_packet *pkt = (volatile struct usb_setup_packet *) &usb_dpram
    ->setup_packet;
385     uint8_t req_direction = pkt->bmRequestType;
386     uint8_t req = pkt->bRequest;
387
388     // Reset PID to 1 for EP0 IN
389     usb_get_endpoint_configuration(EP0_IN_ADDR)->next_pid = 1u;
390
391     if (req_direction == USB_DIR_OUT) {
392         if (req == USB_REQUEST_SET_ADDRESS) {
393             usb_set_device_address(pkt);
394         } else if (req == USB_REQUEST_SET_CONFIGURATION) {
395             usb_set_device_configuration(pkt);
396         } else {
397             usb_acknowledge_out_request();
398             printf("Other OUT request (0x%x)\r\n", pkt->bRequest);
399         }
400     } else if (req_direction == USB_DIR_IN) {
401         if (req == USB_REQUEST_GET_DESCRIPTOR) {
402             uint16_t descriptor_type = pkt->wValue >> 8;
403
404             switch (descriptor_type) {
405                 case USB_DT_DEVICE:
406                     usb_handle_device_descriptor(pkt);
407                     printf("GET DEVICE DESCRIPTOR\r\n");
408                     break;
409
410                 case USB_DT_CONFIG:
411                     usb_handle_config_descriptor(pkt);
412                     printf("GET CONFIG DESCRIPTOR\r\n");
413                     break;
414
415                 case USB_DT_STRING:
416                     usb_handle_string_descriptor(pkt);
417                     printf("GET STRING DESCRIPTOR\r\n");
418                     break;
419
420                 default:
421                     printf("Unhandled GET_DESCRIPTOR type 0x%x\r\n", descriptor_type);
422             }
423         } else {
424             printf("Other IN request (0x%x)\r\n", pkt->bRequest);
```

```
425         }
426     }
427 }
```

4.1.3.2.4. Replying to a setup packet on EP0 IN

The first thing a host will request is the device descriptor, the following code handles that setup request.

Pico Examples: https://github.com/raspberrypi/pico-examples/blob/master/usb/device/dev_lowlevel/dev_lowlevel.c Lines 266 - 273

```
266 void usb_handle_device_descriptor(volatile struct usb_setup_packet *pkt) {
267     const struct usb_device_descriptor *d = dev_config.device_descriptor;
268     // EP0 in
269     struct usb_endpoint_configuration *ep = usb_get_endpoint_configuration(EP0_IN_ADDR);
270     // Always respond with pid 1
271     ep->next_pid = 1;
272     usb_start_transfer(ep, (uint8_t *) d, MIN(sizeof(struct usb_device_descriptor), pkt-
    >wLength));
273 }
```

The `usb_start_transfer` function copies the data to send into the appropriate hardware buffer, and configures the buffer control register. Once the buffer control register has been written to, the device controller will respond to the host with the data. Before this point, the device will reply with a `NAK`.

Pico Examples: https://github.com/raspberrypi/pico-examples/blob/master/usb/device/dev_lowlevel/dev_lowlevel.c Lines 238 - 260

```
238 void usb_start_transfer(struct usb_endpoint_configuration *ep, uint8_t *buf, uint16_t len) {
239     // We are asserting that the length is <= 64 bytes for simplicity of the example.
240     // For multi packet transfers see the tinyusb port.
241     assert(len <= 64);
242
243     printf("Start transfer of len %d on ep addr 0x%x\n", len, ep->descriptor-
    >bEndpointAddress);
244
245     // Prepare buffer control register value
246     uint32_t val = len | USB_BUF_CTRL_AVAIL;
247
248     if (ep_is_tx(ep)) {
249         // Need to copy the data from the user buffer to the usb memory
250         memcpy((void *) ep->data_buffer, (void *) buf, len);
251         // Mark as full
252         val |= USB_BUF_CTRL_FULL;
253     }
254
255     // Set pid and flip for next transfer
256     val |= ep->next_pid ? USB_BUF_CTRL_DATA1_PID : USB_BUF_CTRL_DATA0_PID;
257     ep->next_pid ^= 1u;
258
259     *ep->buffer_control = val;
260 }
```

4.1.4. List of Registers

The USB registers start at a base address of `0x50110000` (defined as USBCTRL_REGS_BASE in SDK).

Table 397. List of USB registers

Offset	Name	Info
0x00	ADDR_ENDP	Device address and endpoint control
0x04	ADDR_ENDP1	Interrupt endpoint 1. Only valid for HOST mode.
0x08	ADDR_ENDP2	Interrupt endpoint 2. Only valid for HOST mode.
0x0c	ADDR_ENDP3	Interrupt endpoint 3. Only valid for HOST mode.
0x10	ADDR_ENDP4	Interrupt endpoint 4. Only valid for HOST mode.
0x14	ADDR_ENDP5	Interrupt endpoint 5. Only valid for HOST mode.
0x18	ADDR_ENDP6	Interrupt endpoint 6. Only valid for HOST mode.
0x1c	ADDR_ENDP7	Interrupt endpoint 7. Only valid for HOST mode.
0x20	ADDR_ENDP8	Interrupt endpoint 8. Only valid for HOST mode.
0x24	ADDR_ENDP9	Interrupt endpoint 9. Only valid for HOST mode.
0x28	ADDR_ENDP10	Interrupt endpoint 10. Only valid for HOST mode.
0x2c	ADDR_ENDP11	Interrupt endpoint 11. Only valid for HOST mode.
0x30	ADDR_ENDP12	Interrupt endpoint 12. Only valid for HOST mode.
0x34	ADDR_ENDP13	Interrupt endpoint 13. Only valid for HOST mode.
0x38	ADDR_ENDP14	Interrupt endpoint 14. Only valid for HOST mode.
0x3c	ADDR_ENDP15	Interrupt endpoint 15. Only valid for HOST mode.
0x40	MAIN_CTRL	Main control register
0x44	SOF_WR	Set the SOF (Start of Frame) frame number in the host controller. The SOF packet is sent every 1ms and the host will increment the frame number by 1 each time.
0x48	SOF_RD	Read the last SOF (Start of Frame) frame number seen. In device mode the last SOF received from the host. In host mode the last SOF sent by the host.
0x4c	SIE_CTRL	SIE control register
0x50	SIE_STATUS	SIE status register
0x54	INT_EP_CTRL	interrupt endpoint control register
0x58	BUFF_STATUS	Buffer status register. A bit set here indicates that a buffer has completed on the endpoint (if the buffer interrupt is enabled). It is possible for 2 buffers to be completed, so clearing the buffer status bit may instantly re set it on the next clock cycle.
0x5c	BUFF_CPU_SHOULD_HANDLE	Which of the double buffers should be handled. Only valid if using an interrupt per buffer (i.e. not per 2 buffers). Not valid for host interrupt endpoint polling because they are only single buffered.
0x60	EP_ABORT	Device only: Can be set to ignore the buffer control register for this endpoint in case you would like to revoke a buffer. A NAK will be sent for every access to the endpoint until this bit is cleared. A corresponding bit in `EP_ABORT_DONE` is set when it is safe to modify the buffer control register.

Offset	Name	Info
0x64	EP_ABORT_DONE	Device only: Used in conjunction with `EP_ABORT`. Set once an endpoint is idle so the programmer knows it is safe to modify the buffer control register.
0x68	EP_STALL_ARM	Device: this bit must be set in conjunction with the `STALL` bit in the buffer control register to send a STALL on EP0. The device controller clears these bits when a SETUP packet is received because the USB spec requires that a STALL condition is cleared when a SETUP packet is received.
0x6c	NAK_POLL	Used by the host controller. Sets the wait time in microseconds before trying again if the device replies with a NAK.
0x70	EP_STATUS_STALL_NAK	Device: bits are set when the `IRQ_ON_NAK` or `IRQ_ON_STALL` bits are set. For EP0 this comes from `SIE_CTRL`. For all other endpoints it comes from the endpoint control register.
0x74	USB_MUXING	Where to connect the USB controller. Should be to_phy by default.
0x78	USB_PWR	Overrides for the power signals in the event that the VBUS signals are not hooked up to GPIO. Set the value of the override and then the override enable to switch over to the override value.
0x7c	USBPHY_DIRECT	This register allows for direct control of the USB phy. Use in conjunction with usbphy_direct_override register to enable each override bit.
0x80	USBPHY_DIRECT_OVERRIDE	Override enable for each control in usbphy_direct
0x84	USBPHY_TRIM	Used to adjust trim values of USB phy pull down resistors.
0x8c	INTR	Raw Interrupts
0x90	INTE	Interrupt Enable
0x94	INTF	Interrupt Force
0x98	INTS	Interrupt status after masking & forcing

USB: ADDR_ENDP Register

Offset: 0x00

Description

Device address and endpoint control

Table 398. ADDR_ENDP Register

Bits	Description	Type	Reset
31:20	Reserved.	-	-
19:16	**ENDPOINT**: Device endpoint to send data to. Only valid for HOST mode.	RW	0x0
15:7	Reserved.	-	-
6:0	**ADDRESS**: In device mode, the address that the device should respond to. Set in response to a SET_ADDR setup packet from the host. In host mode set to the address of the device to communicate with.	RW	0x00

USB: ADDR_ENDP1, ADDR_ENDP2, ..., ADDR_ENDP14, ADDR_ENDP15 Registers

Offsets: 0x04, 0x08, ..., 0x38, 0x3c

Description

Interrupt endpoint *N*. Only valid for HOST mode.

Table 399. ADDR_ENDP1, ADDR_ENDP2, ..., ADDR_ENDP14, ADDR_ENDP15 Registers

Bits	Description	Type	Reset
31:27	Reserved.	-	-
26	**INTEP_PREAMBLE**: Interrupt EP requires preamble (is a low speed device on a full speed hub)	RW	0x0
25	**INTEP_DIR**: Direction of the interrupt endpoint. In=0, Out=1	RW	0x0
24:20	Reserved.	-	-
19:16	**ENDPOINT**: Endpoint number of the interrupt endpoint	RW	0x0
15:7	Reserved.	-	-
6:0	**ADDRESS**: Device address	RW	0x00

USB: MAIN_CTRL Register

Offset: 0x40

Description

Main control register

Table 400. MAIN_CTRL Register

Bits	Description	Type	Reset
31	**SIM_TIMING**: Reduced timings for simulation	RW	0x0
30:2	Reserved.	-	-
1	**HOST_NDEVICE**: Device mode = 0, Host mode = 1	RW	0x0
0	**CONTROLLER_EN**: Enable controller	RW	0x0

USB: SOF_WR Register

Offset: 0x44

Description

Set the SOF (Start of Frame) frame number in the host controller. The SOF packet is sent every 1ms and the host will increment the frame number by 1 each time.

Table 401. SOF_WR Register

Bits	Description	Type	Reset
31:11	Reserved.	-	-
10:0	**COUNT**	WF	0x000

USB: SOF_RD Register

Offset: 0x48

Description

Read the last SOF (Start of Frame) frame number seen. In device mode the last SOF received from the host. In host mode the last SOF sent by the host.

Table 402. SOF_RD Register

Bits	Description	Type	Reset
31:11	Reserved.	-	-

Bits	Description	Type	Reset
10:0	**COUNT**	RO	0x000

USB: SIE_CTRL Register

Offset: 0x4c

Description

SIE control register

Table 403. SIE_CTRL Register

Bits	Description	Type	Reset
31	**EP0_INT_STALL**: Device: Set bit in EP_STATUS_STALL_NAK when EP0 sends a STALL	RW	0x0
30	**EP0_DOUBLE_BUF**: Device: EP0 single buffered = 0, double buffered = 1	RW	0x0
29	**EP0_INT_1BUF**: Device: Set bit in BUFF_STATUS for every buffer completed on EP0	RW	0x0
28	**EP0_INT_2BUF**: Device: Set bit in BUFF_STATUS for every 2 buffers completed on EP0	RW	0x0
27	**EP0_INT_NAK**: Device: Set bit in EP_STATUS_STALL_NAK when EP0 sends a NAK	RW	0x0
26	**DIRECT_EN**: Direct bus drive enable	RW	0x0
25	**DIRECT_DP**: Direct control of DP	RW	0x0
24	**DIRECT_DM**: Direct control of DM	RW	0x0
23:19	Reserved.	-	-
18	**TRANSCEIVER_PD**: Power down bus transceiver	RW	0x0
17	**RPU_OPT**: Device: Pull-up strength (0=1K2, 1=2k3)	RW	0x0
16	**PULLUP_EN**: Device: Enable pull up resistor	RW	0x0
15	**PULLDOWN_EN**: Host: Enable pull down resistors	RW	0x0
14	Reserved.	-	-
13	**RESET_BUS**: Host: Reset bus	SC	0x0
12	**RESUME**: Device: Remote wakeup. Device can initiate its own resume after suspend.	SC	0x0
11	**VBUS_EN**: Host: Enable VBUS	RW	0x0
10	**KEEP_ALIVE_EN**: Host: Enable keep alive packet (for low speed bus)	RW	0x0
9	**SOF_EN**: Host: Enable SOF generation (for full speed bus)	RW	0x0
8	**SOF_SYNC**: Host: Delay packet(s) until after SOF	RW	0x0
7	Reserved.	-	-
6	**PREAMBLE_EN**: Host: Preable enable for LS device on FS hub	RW	0x0
5	Reserved.	-	-
4	**STOP_TRANS**: Host: Stop transaction	SC	0x0
3	**RECEIVE_DATA**: Host: Receive transaction (IN to host)	RW	0x0
2	**SEND_DATA**: Host: Send transaction (OUT from host)	RW	0x0

Bits	Description	Type	Reset
1	**SEND_SETUP**: Host: Send Setup packet	RW	0x0
0	**START_TRANS**: Host: Start transaction	SC	0x0

USB: SIE_STATUS Register

Offset: 0x50

Description

SIE status register

Table 404. SIE_STATUS Register

Bits	Description	Type	Reset
31	**DATA_SEQ_ERROR**: Data Sequence Error. The device can raise a sequence error in the following conditions: * A SETUP packet is received followed by a DATA1 packet (data phase should always be DATA0) * An OUT packet is received from the host but doesn't match the data pid in the buffer control register read from DPSRAM The host can raise a data sequence error in the following conditions: * An IN packet from the device has the wrong data PID	WC	0x0
30	**ACK_REC**: ACK received. Raised by both host and device.	WC	0x0
29	**STALL_REC**: Host: STALL received	WC	0x0
28	**NAK_REC**: Host: NAK received	WC	0x0
27	**RX_TIMEOUT**: RX timeout is raised by both the host and device if an ACK is not received in the maximum time specified by the USB spec.	WC	0x0
26	**RX_OVERFLOW**: RX overflow is raised by the Serial RX engine if the incoming data is too fast.	WC	0x0
25	**BIT_STUFF_ERROR**: Bit Stuff Error. Raised by the Serial RX engine.	WC	0x0
24	**CRC_ERROR**: CRC Error. Raised by the Serial RX engine.	WC	0x0
23:20	Reserved.	-	-
19	**BUS_RESET**: Device: bus reset received	WC	0x0
18	**TRANS_COMPLETE**: Transaction complete. Raised by device if: * An IN or OUT packet is sent with the `LAST_BUFF` bit set in the buffer control register Raised by host if: * A setup packet is sent when no data in or data out transaction follows * An IN packet is received and the `LAST_BUFF` bit is set in the buffer control register * An IN packet is received with zero length * An OUT packet is sent and the `LAST_BUFF` bit is set	WC	0x0
17	**SETUP_REC**: Device: Setup packet received	WC	0x0

Bits	Description	Type	Reset
16	**CONNECTED**: Device: connected	WC	0x0
15:12	Reserved.	-	-
11	**RESUME**: Host: Device has initiated a remote resume. Device: host has initiated a resume.	WC	0x0
10	**VBUS_OVER_CURR**: VBUS over current detected	RO	0x0
9:8	**SPEED**: Host: device speed. Disconnected = 00, LS = 01, FS = 10	WC	0x0
7:5	Reserved.	-	-
4	**SUSPENDED**: Bus in suspended state. Valid for device and host. Host and device will go into suspend if neither Keep Alive / SOF frames are enabled.	WC	0x0
3:2	**LINE_STATE**: USB bus line state	RO	0x0
1	Reserved.	-	-
0	**VBUS_DETECTED**: Device: VBUS Detected	RO	0x0

USB: INT_EP_CTRL Register

Offset: 0x54

Description

interrupt endpoint control register

Table 405. INT_EP_CTRL Register

Bits	Description	Type	Reset
31:16	Reserved.	-	-
15:1	**INT_EP_ACTIVE**: Host: Enable interrupt endpoint 1 → 15	RW	0x0000
0	Reserved.	-	-

USB: BUFF_STATUS Register

Offset: 0x58

Description

Buffer status register. A bit set here indicates that a buffer has completed on the endpoint (if the buffer interrupt is enabled). It is possible for 2 buffers to be completed, so clearing the buffer status bit may instantly re set it on the next clock cycle.

Table 406. BUFF_STATUS Register

Bits	Description	Type	Reset
31	**EP15_OUT**	WC	0x0
30	**EP15_IN**	WC	0x0
29	**EP14_OUT**	WC	0x0
28	**EP14_IN**	WC	0x0
27	**EP13_OUT**	WC	0x0
26	**EP13_IN**	WC	0x0
25	**EP12_OUT**	WC	0x0
24	**EP12_IN**	WC	0x0

Bits	Description	Type	Reset
23	**EP11_OUT**	WC	0x0
22	**EP11_IN**	WC	0x0
21	**EP10_OUT**	WC	0x0
20	**EP10_IN**	WC	0x0
19	**EP9_OUT**	WC	0x0
18	**EP9_IN**	WC	0x0
17	**EP8_OUT**	WC	0x0
16	**EP8_IN**	WC	0x0
15	**EP7_OUT**	WC	0x0
14	**EP7_IN**	WC	0x0
13	**EP6_OUT**	WC	0x0
12	**EP6_IN**	WC	0x0
11	**EP5_OUT**	WC	0x0
10	**EP5_IN**	WC	0x0
9	**EP4_OUT**	WC	0x0
8	**EP4_IN**	WC	0x0
7	**EP3_OUT**	WC	0x0
6	**EP3_IN**	WC	0x0
5	**EP2_OUT**	WC	0x0
4	**EP2_IN**	WC	0x0
3	**EP1_OUT**	WC	0x0
2	**EP1_IN**	WC	0x0
1	**EP0_OUT**	WC	0x0
0	**EP0_IN**	WC	0x0

USB: BUFF_CPU_SHOULD_HANDLE Register

Offset: 0x5c

Description

Which of the double buffers should be handled. Only valid if using an interrupt per buffer (i.e. not per 2 buffers). Not valid for host interrupt endpoint polling because they are only single buffered.

Table 407. BUFF_CPU_SHOULD_HANDLE Register

Bits	Description	Type	Reset
31	**EP15_OUT**	RO	0x0
30	**EP15_IN**	RO	0x0
29	**EP14_OUT**	RO	0x0
28	**EP14_IN**	RO	0x0
27	**EP13_OUT**	RO	0x0
26	**EP13_IN**	RO	0x0

Bits	Description	Type	Reset
25	**EP12_OUT**	RO	0x0
24	**EP12_IN**	RO	0x0
23	**EP11_OUT**	RO	0x0
22	**EP11_IN**	RO	0x0
21	**EP10_OUT**	RO	0x0
20	**EP10_IN**	RO	0x0
19	**EP9_OUT**	RO	0x0
18	**EP9_IN**	RO	0x0
17	**EP8_OUT**	RO	0x0
16	**EP8_IN**	RO	0x0
15	**EP7_OUT**	RO	0x0
14	**EP7_IN**	RO	0x0
13	**EP6_OUT**	RO	0x0
12	**EP6_IN**	RO	0x0
11	**EP5_OUT**	RO	0x0
10	**EP5_IN**	RO	0x0
9	**EP4_OUT**	RO	0x0
8	**EP4_IN**	RO	0x0
7	**EP3_OUT**	RO	0x0
6	**EP3_IN**	RO	0x0
5	**EP2_OUT**	RO	0x0
4	**EP2_IN**	RO	0x0
3	**EP1_OUT**	RO	0x0
2	**EP1_IN**	RO	0x0
1	**EP0_OUT**	RO	0x0
0	**EP0_IN**	RO	0x0

USB: EP_ABORT Register

Offset: 0x60

Description

Device only: Can be set to ignore the buffer control register for this endpoint in case you would like to revoke a buffer. A NAK will be sent for every access to the endpoint until this bit is cleared. A corresponding bit in `EP_ABORT_DONE` is set when it is safe to modify the buffer control register.

Table 408. EP_ABORT Register

Bits	Description	Type	Reset
31	**EP15_OUT**	RW	0x0
30	**EP15_IN**	RW	0x0
29	**EP14_OUT**	RW	0x0

Bits	Description	Type	Reset
28	**EP14_IN**	RW	0x0
27	**EP13_OUT**	RW	0x0
26	**EP13_IN**	RW	0x0
25	**EP12_OUT**	RW	0x0
24	**EP12_IN**	RW	0x0
23	**EP11_OUT**	RW	0x0
22	**EP11_IN**	RW	0x0
21	**EP10_OUT**	RW	0x0
20	**EP10_IN**	RW	0x0
19	**EP9_OUT**	RW	0x0
18	**EP9_IN**	RW	0x0
17	**EP8_OUT**	RW	0x0
16	**EP8_IN**	RW	0x0
15	**EP7_OUT**	RW	0x0
14	**EP7_IN**	RW	0x0
13	**EP6_OUT**	RW	0x0
12	**EP6_IN**	RW	0x0
11	**EP5_OUT**	RW	0x0
10	**EP5_IN**	RW	0x0
9	**EP4_OUT**	RW	0x0
8	**EP4_IN**	RW	0x0
7	**EP3_OUT**	RW	0x0
6	**EP3_IN**	RW	0x0
5	**EP2_OUT**	RW	0x0
4	**EP2_IN**	RW	0x0
3	**EP1_OUT**	RW	0x0
2	**EP1_IN**	RW	0x0
1	**EP0_OUT**	RW	0x0
0	**EP0_IN**	RW	0x0

USB: EP_ABORT_DONE Register

Offset: 0x64

Description

Device only: Used in conjunction with `EP_ABORT`. Set once an endpoint is idle so the programmer knows it is safe to modify the buffer control register.

Table 409. EP_ABORT_DONE Register

Bits	Description	Type	Reset
31	**EP15_OUT**	WC	0x0
30	**EP15_IN**	WC	0x0
29	**EP14_OUT**	WC	0x0
28	**EP14_IN**	WC	0x0
27	**EP13_OUT**	WC	0x0
26	**EP13_IN**	WC	0x0
25	**EP12_OUT**	WC	0x0
24	**EP12_IN**	WC	0x0
23	**EP11_OUT**	WC	0x0
22	**EP11_IN**	WC	0x0
21	**EP10_OUT**	WC	0x0
20	**EP10_IN**	WC	0x0
19	**EP9_OUT**	WC	0x0
18	**EP9_IN**	WC	0x0
17	**EP8_OUT**	WC	0x0
16	**EP8_IN**	WC	0x0
15	**EP7_OUT**	WC	0x0
14	**EP7_IN**	WC	0x0
13	**EP6_OUT**	WC	0x0
12	**EP6_IN**	WC	0x0
11	**EP5_OUT**	WC	0x0
10	**EP5_IN**	WC	0x0
9	**EP4_OUT**	WC	0x0
8	**EP4_IN**	WC	0x0
7	**EP3_OUT**	WC	0x0
6	**EP3_IN**	WC	0x0
5	**EP2_OUT**	WC	0x0
4	**EP2_IN**	WC	0x0
3	**EP1_OUT**	WC	0x0
2	**EP1_IN**	WC	0x0
1	**EP0_OUT**	WC	0x0
0	**EP0_IN**	WC	0x0

USB: EP_STALL_ARM Register

Offset: 0x68

Description

Device: this bit must be set in conjunction with the `STALL` bit in the buffer control register to send a STALL on EP0. The device controller clears these bits when a SETUP packet is received because the USB spec requires that a STALL condition is cleared when a SETUP packet is received.

Table 410. EP_STALL_ARM Register

Bits	Description	Type	Reset
31:2	Reserved.	-	-
1	**EP0_OUT**	RW	0x0
0	**EP0_IN**	RW	0x0

USB: NAK_POLL Register

Offset: 0x6c

Description

Used by the host controller. Sets the wait time in microseconds before trying again if the device replies with a NAK.

Table 411. NAK_POLL Register

Bits	Description	Type	Reset
31:26	Reserved.	-	-
25:16	**DELAY_FS**: NAK polling interval for a full speed device	RW	0x010
15:10	Reserved.	-	-
9:0	**DELAY_LS**: NAK polling interval for a low speed device	RW	0x010

USB: EP_STATUS_STALL_NAK Register

Offset: 0x70

Description

Device: bits are set when the `IRQ_ON_NAK` or `IRQ_ON_STALL` bits are set. For EP0 this comes from `SIE_CTRL`. For all other endpoints it comes from the endpoint control register.

Table 412. EP_STATUS_STALL_NAK Register

Bits	Description	Type	Reset
31	**EP15_OUT**	WC	0x0
30	**EP15_IN**	WC	0x0
29	**EP14_OUT**	WC	0x0
28	**EP14_IN**	WC	0x0
27	**EP13_OUT**	WC	0x0
26	**EP13_IN**	WC	0x0
25	**EP12_OUT**	WC	0x0
24	**EP12_IN**	WC	0x0
23	**EP11_OUT**	WC	0x0
22	**EP11_IN**	WC	0x0
21	**EP10_OUT**	WC	0x0
20	**EP10_IN**	WC	0x0
19	**EP9_OUT**	WC	0x0
18	**EP9_IN**	WC	0x0

Bits	Description	Type	Reset
17	**EP8_OUT**	WC	0x0
16	**EP8_IN**	WC	0x0
15	**EP7_OUT**	WC	0x0
14	**EP7_IN**	WC	0x0
13	**EP6_OUT**	WC	0x0
12	**EP6_IN**	WC	0x0
11	**EP5_OUT**	WC	0x0
10	**EP5_IN**	WC	0x0
9	**EP4_OUT**	WC	0x0
8	**EP4_IN**	WC	0x0
7	**EP3_OUT**	WC	0x0
6	**EP3_IN**	WC	0x0
5	**EP2_OUT**	WC	0x0
4	**EP2_IN**	WC	0x0
3	**EP1_OUT**	WC	0x0
2	**EP1_IN**	WC	0x0
1	**EP0_OUT**	WC	0x0
0	**EP0_IN**	WC	0x0

USB: USB_MUXING Register

Offset: 0x74

Description

Where to connect the USB controller. Should be to_phy by default.

Table 413. USB_MUXING Register

Bits	Description	Type	Reset
31:4	Reserved.	-	-
3	**SOFTCON**	RW	0x0
2	**TO_DIGITAL_PAD**	RW	0x0
1	**TO_EXTPHY**	RW	0x0
0	**TO_PHY**	RW	0x0

USB: USB_PWR Register

Offset: 0x78

Description

Overrides for the power signals in the event that the VBUS signals are not hooked up to GPIO. Set the value of the override and then the override enable to switch over to the override value.

Table 414. USB_PWR Register

Bits	Description	Type	Reset
31:6	Reserved.	-	-

Bits	Description	Type	Reset
5	**OVERCURR_DETECT_EN**	RW	0x0
4	**OVERCURR_DETECT**	RW	0x0
3	**VBUS_DETECT_OVERRIDE_EN**	RW	0x0
2	**VBUS_DETECT**	RW	0x0
1	**VBUS_EN_OVERRIDE_EN**	RW	0x0
0	**VBUS_EN**	RW	0x0

USB: USBPHY_DIRECT Register

Offset: 0x7c

Description

This register allows for direct control of the USB phy. Use in conjunction with usbphy_direct_override register to enable each override bit.

Table 415. USBPHY_DIRECT Register

Bits	Description	Type	Reset
31:23	Reserved.	-	-
22	**DM_OVV**: DM over voltage	RO	0x0
21	**DP_OVV**: DP over voltage	RO	0x0
20	**DM_OVCN**: DM overcurrent	RO	0x0
19	**DP_OVCN**: DP overcurrent	RO	0x0
18	**RX_DM**: DPM pin state	RO	0x0
17	**RX_DP**: DPP pin state	RO	0x0
16	**RX_DD**: Differential RX	RO	0x0
15	**TX_DIFFMODE**: TX_DIFFMODE=0: Single ended mode TX_DIFFMODE=1: Differential drive mode (TX_DM, TX_DM_OE ignored)	RW	0x0
14	**TX_FSSLEW**: TX_FSSLEW=0: Low speed slew rate TX_FSSLEW=1: Full speed slew rate	RW	0x0
13	**TX_PD**: TX power down override (if override enable is set). 1 = powered down.	RW	0x0
12	**RX_PD**: RX power down override (if override enable is set). 1 = powered down.	RW	0x0
11	**TX_DM**: Output data. TX_DIFFMODE=1, Ignored TX_DIFFMODE=0, Drives DPM only. TX_DM_OE=1 to enable drive. DPM=TX_DM	RW	0x0
10	**TX_DP**: Output data. If TX_DIFFMODE=1, Drives DPP/DPM diff pair. TX_DP_OE=1 to enable drive. DPP=TX_DP, DPM=~TX_DP If TX_DIFFMODE=0, Drives DPP only. TX_DP_OE=1 to enable drive. DPP=TX_DP	RW	0x0
9	**TX_DM_OE**: Output enable. If TX_DIFFMODE=1, Ignored. If TX_DIFFMODE=0, OE for DPM only. 0 - DPM in Hi-Z state; 1 - DPM driving	RW	0x0
8	**TX_DP_OE**: Output enable. If TX_DIFFMODE=1, OE for DPP/DPM diff pair. 0 - DPP/DPM in Hi-Z state; 1 - DPP/DPM driving If TX_DIFFMODE=0, OE for DPP only. 0 - DPP in Hi-Z state; 1 - DPP driving	RW	0x0
7	Reserved.	-	-

Bits	Description	Type	Reset
6	**DM_PULLDN_EN**: DM pull down enable	RW	0x0
5	**DM_PULLUP_EN**: DM pull up enable	RW	0x0
4	**DM_PULLUP_HISEL**: Enable the second DM pull up resistor. 0 - Pull = Rpu2; 1 - Pull = Rpu1 + Rpu2	RW	0x0
3	Reserved.	-	-
2	**DP_PULLDN_EN**: DP pull down enable	RW	0x0
1	**DP_PULLUP_EN**: DP pull up enable	RW	0x0
0	**DP_PULLUP_HISEL**: Enable the second DP pull up resistor. 0 - Pull = Rpu2; 1 - Pull = Rpu1 + Rpu2	RW	0x0

USB: USBPHY_DIRECT_OVERRIDE Register

Offset: 0x80

Description

Override enable for each control in usbphy_direct

Table 416. USBPHY_DIRECT_OVERRIDE Register

Bits	Description	Type	Reset
31:16	Reserved.	-	-
15	**TX_DIFFMODE_OVERRIDE_EN**	RW	0x0
14:13	Reserved.	-	-
12	**DM_PULLUP_OVERRIDE_EN**	RW	0x0
11	**TX_FSSLEW_OVERRIDE_EN**	RW	0x0
10	**TX_PD_OVERRIDE_EN**	RW	0x0
9	**RX_PD_OVERRIDE_EN**	RW	0x0
8	**TX_DM_OVERRIDE_EN**	RW	0x0
7	**TX_DP_OVERRIDE_EN**	RW	0x0
6	**TX_DM_OE_OVERRIDE_EN**	RW	0x0
5	**TX_DP_OE_OVERRIDE_EN**	RW	0x0
4	**DM_PULLDN_EN_OVERRIDE_EN**	RW	0x0
3	**DP_PULLDN_EN_OVERRIDE_EN**	RW	0x0
2	**DP_PULLUP_EN_OVERRIDE_EN**	RW	0x0
1	**DM_PULLUP_HISEL_OVERRIDE_EN**	RW	0x0
0	**DP_PULLUP_HISEL_OVERRIDE_EN**	RW	0x0

USB: USBPHY_TRIM Register

Offset: 0x84

Description

Used to adjust trim values of USB phy pull down resistors.

Table 417. USBPHY_TRIM Register

Bits	Description	Type	Reset
31:13	Reserved.	-	-
12:8	**DM_PULLDN_TRIM**: Value to drive to USB PHY DM pulldown resistor trim control Experimental data suggests that the reset value will work, but this register allows adjustment if required	RW	0x1f
7:5	Reserved.	-	-
4:0	**DP_PULLDN_TRIM**: Value to drive to USB PHY DP pulldown resistor trim control Experimental data suggests that the reset value will work, but this register allows adjustment if required	RW	0x1f

USB: INTR Register

Offset: 0x8c

Description

Raw Interrupts

Table 418. INTR Register

Bits	Description	Type	Reset
31:20	Reserved.	-	-
19	**EP_STALL_NAK**: Raised when any bit in EP_STATUS_STALL_NAK is set. Clear by clearing all bits in EP_STATUS_STALL_NAK.	RO	0x0
18	**ABORT_DONE**: Raised when any bit in ABORT_DONE is set. Clear by clearing all bits in ABORT_DONE.	RO	0x0
17	**DEV_SOF**: Set every time the device receives a SOF (Start of Frame) packet. Cleared by reading SOF_RD	RO	0x0
16	**SETUP_REQ**: Device. Source: SIE_STATUS.SETUP_REC	RO	0x0
15	**DEV_RESUME_FROM_HOST**: Set when the device receives a resume from the host. Cleared by writing to SIE_STATUS.RESUME	RO	0x0
14	**DEV_SUSPEND**: Set when the device suspend state changes. Cleared by writing to SIE_STATUS.SUSPENDED	RO	0x0
13	**DEV_CONN_DIS**: Set when the device connection state changes. Cleared by writing to SIE_STATUS.CONNECTED	RO	0x0
12	**BUS_RESET**: Source: SIE_STATUS.BUS_RESET	RO	0x0
11	**VBUS_DETECT**: Source: SIE_STATUS.VBUS_DETECTED	RO	0x0
10	**STALL**: Source: SIE_STATUS.STALL_REC	RO	0x0
9	**ERROR_CRC**: Source: SIE_STATUS.CRC_ERROR	RO	0x0
8	**ERROR_BIT_STUFF**: Source: SIE_STATUS.BIT_STUFF_ERROR	RO	0x0
7	**ERROR_RX_OVERFLOW**: Source: SIE_STATUS.RX_OVERFLOW	RO	0x0
6	**ERROR_RX_TIMEOUT**: Source: SIE_STATUS.RX_TIMEOUT	RO	0x0
5	**ERROR_DATA_SEQ**: Source: SIE_STATUS.DATA_SEQ_ERROR	RO	0x0
4	**BUFF_STATUS**: Raised when any bit in BUFF_STATUS is set. Clear by clearing all bits in BUFF_STATUS.	RO	0x0

Bits	Description	Type	Reset
3	**TRANS_COMPLETE**: Raised every time SIE_STATUS.TRANS_COMPLETE is set. Clear by writing to this bit.	RO	0x0
2	**HOST_SOF**: Host: raised every time the host sends a SOF (Start of Frame). Cleared by reading SOF_RD	RO	0x0
1	**HOST_RESUME**: Host: raised when a device wakes up the host. Cleared by writing to SIE_STATUS.RESUME	RO	0x0
0	**HOST_CONN_DIS**: Host: raised when a device is connected or disconnected (i.e. when SIE_STATUS.SPEED changes). Cleared by writing to SIE_STATUS.SPEED	RO	0x0

USB: INTE Register

Offset: 0x90

Description

Interrupt Enable

Table 419. INTE Register

Bits	Description	Type	Reset
31:20	Reserved.	-	-
19	**EP_STALL_NAK**: Raised when any bit in EP_STATUS_STALL_NAK is set. Clear by clearing all bits in EP_STATUS_STALL_NAK.	RW	0x0
18	**ABORT_DONE**: Raised when any bit in ABORT_DONE is set. Clear by clearing all bits in ABORT_DONE.	RW	0x0
17	**DEV_SOF**: Set every time the device receives a SOF (Start of Frame) packet. Cleared by reading SOF_RD	RW	0x0
16	**SETUP_REQ**: Device. Source: SIE_STATUS.SETUP_REC	RW	0x0
15	**DEV_RESUME_FROM_HOST**: Set when the device receives a resume from the host. Cleared by writing to SIE_STATUS.RESUME	RW	0x0
14	**DEV_SUSPEND**: Set when the device suspend state changes. Cleared by writing to SIE_STATUS.SUSPENDED	RW	0x0
13	**DEV_CONN_DIS**: Set when the device connection state changes. Cleared by writing to SIE_STATUS.CONNECTED	RW	0x0
12	**BUS_RESET**: Source: SIE_STATUS.BUS_RESET	RW	0x0
11	**VBUS_DETECT**: Source: SIE_STATUS.VBUS_DETECTED	RW	0x0
10	**STALL**: Source: SIE_STATUS.STALL_REC	RW	0x0
9	**ERROR_CRC**: Source: SIE_STATUS.CRC_ERROR	RW	0x0
8	**ERROR_BIT_STUFF**: Source: SIE_STATUS.BIT_STUFF_ERROR	RW	0x0
7	**ERROR_RX_OVERFLOW**: Source: SIE_STATUS.RX_OVERFLOW	RW	0x0
6	**ERROR_RX_TIMEOUT**: Source: SIE_STATUS.RX_TIMEOUT	RW	0x0
5	**ERROR_DATA_SEQ**: Source: SIE_STATUS.DATA_SEQ_ERROR	RW	0x0
4	**BUFF_STATUS**: Raised when any bit in BUFF_STATUS is set. Clear by clearing all bits in BUFF_STATUS.	RW	0x0
3	**TRANS_COMPLETE**: Raised every time SIE_STATUS.TRANS_COMPLETE is set. Clear by writing to this bit.	RW	0x0

Bits	Description	Type	Reset
2	**HOST_SOF**: Host: raised every time the host sends a SOF (Start of Frame). Cleared by reading SOF_RD	RW	0x0
1	**HOST_RESUME**: Host: raised when a device wakes up the host. Cleared by writing to SIE_STATUS.RESUME	RW	0x0
0	**HOST_CONN_DIS**: Host: raised when a device is connected or disconnected (i.e. when SIE_STATUS.SPEED changes). Cleared by writing to SIE_STATUS.SPEED	RW	0x0

USB: INTF Register

Offset: 0x94

Description

Interrupt Force

Table 420. INTF Register

Bits	Description	Type	Reset
31:20	Reserved.	-	-
19	**EP_STALL_NAK**: Raised when any bit in EP_STATUS_STALL_NAK is set. Clear by clearing all bits in EP_STATUS_STALL_NAK.	RW	0x0
18	**ABORT_DONE**: Raised when any bit in ABORT_DONE is set. Clear by clearing all bits in ABORT_DONE.	RW	0x0
17	**DEV_SOF**: Set every time the device receives a SOF (Start of Frame) packet. Cleared by reading SOF_RD	RW	0x0
16	**SETUP_REQ**: Device. Source: SIE_STATUS.SETUP_REC	RW	0x0
15	**DEV_RESUME_FROM_HOST**: Set when the device receives a resume from the host. Cleared by writing to SIE_STATUS.RESUME	RW	0x0
14	**DEV_SUSPEND**: Set when the device suspend state changes. Cleared by writing to SIE_STATUS.SUSPENDED	RW	0x0
13	**DEV_CONN_DIS**: Set when the device connection state changes. Cleared by writing to SIE_STATUS.CONNECTED	RW	0x0
12	**BUS_RESET**: Source: SIE_STATUS.BUS_RESET	RW	0x0
11	**VBUS_DETECT**: Source: SIE_STATUS.VBUS_DETECTED	RW	0x0
10	**STALL**: Source: SIE_STATUS.STALL_REC	RW	0x0
9	**ERROR_CRC**: Source: SIE_STATUS.CRC_ERROR	RW	0x0
8	**ERROR_BIT_STUFF**: Source: SIE_STATUS.BIT_STUFF_ERROR	RW	0x0
7	**ERROR_RX_OVERFLOW**: Source: SIE_STATUS.RX_OVERFLOW	RW	0x0
6	**ERROR_RX_TIMEOUT**: Source: SIE_STATUS.RX_TIMEOUT	RW	0x0
5	**ERROR_DATA_SEQ**: Source: SIE_STATUS.DATA_SEQ_ERROR	RW	0x0
4	**BUFF_STATUS**: Raised when any bit in BUFF_STATUS is set. Clear by clearing all bits in BUFF_STATUS.	RW	0x0
3	**TRANS_COMPLETE**: Raised every time SIE_STATUS.TRANS_COMPLETE is set. Clear by writing to this bit.	RW	0x0
2	**HOST_SOF**: Host: raised every time the host sends a SOF (Start of Frame). Cleared by reading SOF_RD	RW	0x0

Bits	Description	Type	Reset
1	**HOST_RESUME**: Host: raised when a device wakes up the host. Cleared by writing to SIE_STATUS.RESUME	RW	0x0
0	**HOST_CONN_DIS**: Host: raised when a device is connected or disconnected (i.e. when SIE_STATUS.SPEED changes). Cleared by writing to SIE_STATUS.SPEED	RW	0x0

USB: INTS Register

Offset: 0x98

Description

Interrupt status after masking & forcing

Table 421. INTS Register

Bits	Description	Type	Reset
31:20	Reserved.	-	-
19	**EP_STALL_NAK**: Raised when any bit in EP_STATUS_STALL_NAK is set. Clear by clearing all bits in EP_STATUS_STALL_NAK.	RO	0x0
18	**ABORT_DONE**: Raised when any bit in ABORT_DONE is set. Clear by clearing all bits in ABORT_DONE.	RO	0x0
17	**DEV_SOF**: Set every time the device receives a SOF (Start of Frame) packet. Cleared by reading SOF_RD	RO	0x0
16	**SETUP_REQ**: Device. Source: SIE_STATUS.SETUP_REC	RO	0x0
15	**DEV_RESUME_FROM_HOST**: Set when the device receives a resume from the host. Cleared by writing to SIE_STATUS.RESUME	RO	0x0
14	**DEV_SUSPEND**: Set when the device suspend state changes. Cleared by writing to SIE_STATUS.SUSPENDED	RO	0x0
13	**DEV_CONN_DIS**: Set when the device connection state changes. Cleared by writing to SIE_STATUS.CONNECTED	RO	0x0
12	**BUS_RESET**: Source: SIE_STATUS.BUS_RESET	RO	0x0
11	**VBUS_DETECT**: Source: SIE_STATUS.VBUS_DETECTED	RO	0x0
10	**STALL**: Source: SIE_STATUS.STALL_REC	RO	0x0
9	**ERROR_CRC**: Source: SIE_STATUS.CRC_ERROR	RO	0x0
8	**ERROR_BIT_STUFF**: Source: SIE_STATUS.BIT_STUFF_ERROR	RO	0x0
7	**ERROR_RX_OVERFLOW**: Source: SIE_STATUS.RX_OVERFLOW	RO	0x0
6	**ERROR_RX_TIMEOUT**: Source: SIE_STATUS.RX_TIMEOUT	RO	0x0
5	**ERROR_DATA_SEQ**: Source: SIE_STATUS.DATA_SEQ_ERROR	RO	0x0
4	**BUFF_STATUS**: Raised when any bit in BUFF_STATUS is set. Clear by clearing all bits in BUFF_STATUS.	RO	0x0
3	**TRANS_COMPLETE**: Raised every time SIE_STATUS.TRANS_COMPLETE is set. Clear by writing to this bit.	RO	0x0
2	**HOST_SOF**: Host: raised every time the host sends a SOF (Start of Frame). Cleared by reading SOF_RD	RO	0x0
1	**HOST_RESUME**: Host: raised when a device wakes up the host. Cleared by writing to SIE_STATUS.RESUME	RO	0x0

Bits	Description	Type	Reset
0	**HOST_CONN_DIS**: Host: raised when a device is connected or disconnected (i.e. when SIE_STATUS.SPEED changes). Cleared by writing to SIE_STATUS.SPEED	RO	0x0

References

- [1] USB Made Simple
- [2] USB 2.0 Specification

4.2. UART

> **ARM Documentation**
>
> Excerpted from the PrimeCell UART (PL011) Technical Reference Manual. Used with permission.

RP2040 has 2 identical instances of a UART peripheral, based on the ARM Primecell UART (PL011) (Revision r1p5).

Each instance supports the following features:

- Separate 32×8 Tx and 32×12 Rx FIFOs
- Programmable baud rate generator, clocked by `clk_peri` (see Section 2.15.1)
- Standard asynchronous communication bits (start, stop, parity) added on transmit and removed on receive
- line break detection
- programmable serial interface (5, 6, 7, or 8 bits)
- 1 or 2 stop bits
- programmable hardware flow control

Each UART can be connected to a number of GPIO pins as defined in the GPIO muxing table in Section 2.19.2. Connections to the GPIO muxing are prefixed with the UART instance name `uart0_` or `uart1_`, and include the following:

- Transmit data `tx` (referred to as UARTTXD in the following sections)
- Received data `rx` (referred to as UARTRXD in the following sections)
- Output flow control `rts` (referred to as nUARTRTS in the following sections)
- Input flow control `cts` (referred to as nUARTCTS in the following sections)

The modem mode and IrDA mode of the PL011 are not supported.

The `UARTCLK` is driven from `clk_peri`, and `PCLK` is driven from the system clock `clk_sys` (see Section 2.15.1).

4.2.1. Overview

The UART performs:

- Serial-to-parallel conversion on data received from a peripheral device
- Parallel-to-serial conversion on data transmitted to the peripheral device.

The CPU reads and writes data and control/status information through the AMBA APB interface. The transmit and receive paths are buffered with internal FIFO memories enabling up to 32-bytes to be stored independently in both

transmit and receive modes.

The UART:

- Includes a programmable baud rate generator that generates a common transmit and receive internal clock from the UART internal reference clock input, UARTCLK
- Offers similar functionality to the industry-standard 16C650 UART device
- Supports a maximum baud rate of UARTCLK / 16 in UART mode (7.8 Mbaud at 125MHz)

The UART operation and baud rate values are controlled by the Line Control Register, UARTLCR_H and the baud rate divisor registers (Integer Baud Rate Register, UARTIBRD and Fractional Baud Rate Register, UARTFBRD).

The UART can generate:

- Individually-maskable interrupts from the receive (including timeout), transmit, modem status and error conditions
- A single combined interrupt so that the output is asserted if any of the individual interrupts are asserted, and unmasked
- DMA request signals for interfacing with a Direct Memory Access (DMA) controller.

If a framing, parity, or break error occurs during reception, the appropriate error bit is set, and is stored in the FIFO. If an overrun condition occurs, the overrun register bit is set immediately and FIFO data is prevented from being overwritten.

You can program the FIFOs to be 1-byte deep providing a conventional double-buffered UART interface.

There is a programmable hardware flow control feature that uses the nUARTCTS input and the nUARTRTS output to automatically control the serial data flow.

4.2.2. Functional description

Figure 59. UART block diagram. Test logic is not shown for clarity.

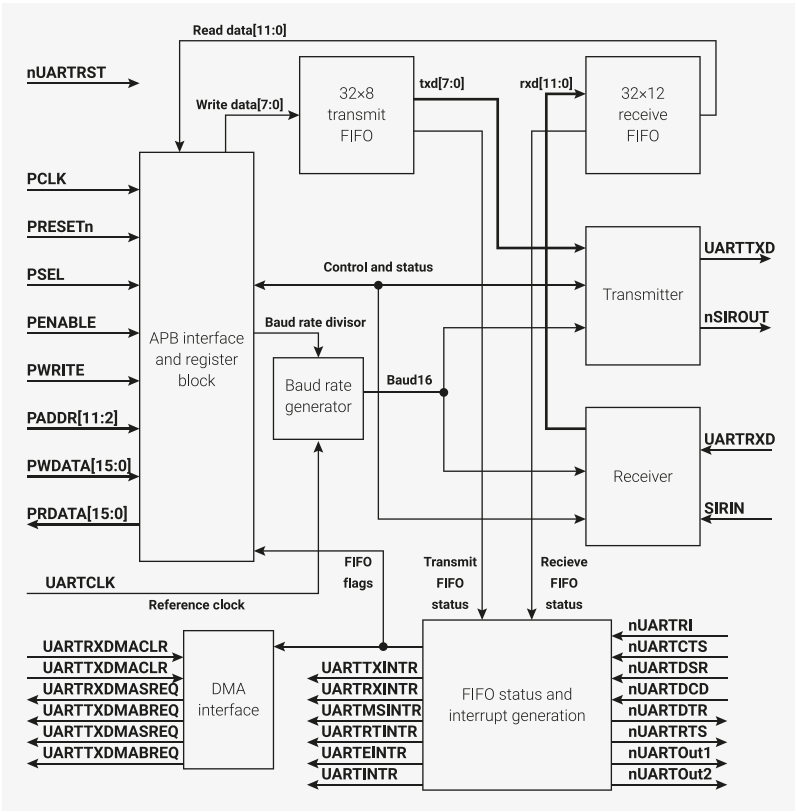

4.2.2.1. AMBA APB interface

The AMBA APB interface generates read and write decodes for accesses to status/control registers, and the transmit and receive FIFOs.

4.2.2.2. Register block

The register block stores data written, or to be read across the AMBA APB interface.

4.2.2.3. Baud rate generator

The baud rate generator contains free-running counters that generate the internal clocks: Baud16 and IrLPBaud16 signals. Baud16 provides timing information for UART transmit and receive control. Baud16 is a stream of pulses with a width of one UARTCLK clock period and a frequency of 16 times the baud rate.

4.2.2.4. Transmit FIFO

The transmit FIFO is an 8-bit wide, 32 location deep, FIFO memory buffer. CPU data written across the APB interface is stored in the FIFO until read out by the transmit logic. You can disable the transmit FIFO to act like a one-byte holding register.

4.2.2.5. Receive FIFO

The receive FIFO is a 12-bit wide, 32 location deep, FIFO memory buffer. Received data and corresponding error bits, are stored in the receive FIFO by the receive logic until read out by the CPU across the APB interface. The receive FIFO can be disabled to act like a one-byte holding register.

4.2.2.6. Transmit logic

The transmit logic performs parallel-to-serial conversion on the data read from the transmit FIFO. Control logic outputs the serial bit stream beginning with a start bit, data bits with the Least Significant Bit (LSB) first, followed by the parity bit, and then the stop bits according to the programmed configuration in control registers.

4.2.2.7. Receive logic

The receive logic performs serial-to-parallel conversion on the received bit stream after a valid start pulse has been detected. Overrun, parity, frame error checking, and line break detection are also performed, and their status accompanies the data that is written to the receive FIFO.

4.2.2.8. Interrupt generation logic

Individual maskable active HIGH interrupts are generated by the UART. A combined interrupt output is generated as an OR function of the individual interrupt requests and is connected to the processor interrupt controllers.

See Section 4.2.6 for more information.

4.2.2.9. DMA interface

The UART provides an interface to connect to the DMA controller as UART DMA interface in Section 4.2.5 describes.

4.2.2.10. Synchronizing registers and logic

The UART supports both asynchronous and synchronous operation of the clocks, PCLK and UARTCLK. Synchronization registers and handshaking logic have been implemented, and are active at all times. This has a minimal impact on performance or area. Synchronization of control signals is performed on both directions of data flow, that is from the PCLK to the UARTCLK domain, and from the UARTCLK to the PCLK domain.

4.2.3. Operation

4.2.3.1. Clock signals

The frequency selected for UARTCLK must accommodate the required range of baud rates:

- FUARTCLK (min) ≥ 16 × baud_rate(max)
- FUARTCLK(max) ≤ 16 × 65535 × baud_rate(min)

For example, for a range of baud rates from 110 baud to 460800 baud the UARTCLK frequency must be between 7.3728MHz to 115.34MHz.

The frequency of UARTCLK must also be within the required error limits for all baud rates to be used.

There is also a constraint on the ratio of clock frequencies for PCLK to UARTCLK. The frequency of UARTCLK must be no more than 5/3 times faster than the frequency of PCLK:

- FUARTCLK ≤ 5/3 × FPCLK

For example, in UART mode, to generate 921600 baud when UARTCLK is 14.7456MHz then PCLK must be greater than or equal to 8.85276MHz. This ensures that the UART has sufficient time to write the received data to the receive FIFO.

4.2.3.2. UART operation

Control data is written to the UART Line Control Register, UARTLCR. This register is 30-bits wide internally, but is externally accessed through the APB interface by writes to the following registers:

The UARTLCR_H register defines the:

- transmission parameters
- word length
- buffer mode
- number of transmitted stop bits
- parity mode
- break generation.

The UARTIBRD register defines the integer baud rate divider, and the UARTFBRD register defines the fractional baud rate divider.

4.2.3.2.1. Fractional baud rate divider

The baud rate divisor is a 22-bit number consisting of a 16-bit integer and a 6-bit fractional part. This is used by the baud rate generator to determine the bit period. The fractional baud rate divider enables the use of any clock with a frequency >3.6864MHz to act as UARTCLK, while it is still possible to generate all the standard baud rates.

The 16-bit integer is written to the Integer Baud Rate Register, UARTIBRD. The 6-bit fractional part is written to the Fractional Baud Rate Register, UARTFBRD. The Baud Rate Divisor has the following relationship to UARTCLK:

Baud Rate Divisor = UARTCLK/(16×Baud Rate) = $BRD_I + BRD_F$ where BRD_I is the integer part and BRD_F is the fractional part separated by a decimal point as Figure 60.

Figure 60. Baud rate divisor.

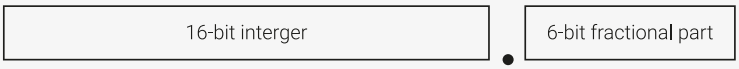

You can calculate the 6-bit number (m) by taking the fractional part of the required baud rate divisor and multiplying it by 64 (that is, 2^n, where n is the width of the UARTFBRD Register) and adding 0.5 to account for rounding errors:

$$m = integer(BRD_F \times 2n + 0.5)$$

An internal clock enable signal, Baud16, is generated, and is a stream of one UARTCLK wide pulses with an average frequency of 16 times the required baud rate. This signal is then divided by 16 to give the transmit clock. A low number in the baud rate divisor gives a short bit period, and a high number in the baud rate divisor gives a long bit period.

4.2.3.2.2. Data transmission or reception

Data received or transmitted is stored in two 32-byte FIFOs, though the receive FIFO has an extra four bits per character for status information. For transmission, data is written into the transmit FIFO. If the UART is enabled, it causes a data frame to start transmitting with the parameters indicated in the Line Control Register, UARTLCR_H. Data continues to be transmitted until there is no data left in the transmit FIFO. The BUSY signal goes HIGH as soon as data is written to the transmit FIFO (that is, the FIFO is non-empty) and remains asserted HIGH while data is being transmitted. BUSY is negated only when the transmit FIFO is empty, and the last character has been transmitted from the shift register, including the stop bits. BUSY can be asserted HIGH even though the UART might no longer be enabled.

For each sample of data, three readings are taken and the majority value is kept. In the following paragraphs the middle sampling point is defined, and one sample is taken either side of it.

When the receiver is idle (UARTRXD continuously 1, in the marking state) and a LOW is detected on the data input (a start bit has been received), the receive counter, with the clock enabled by Baud16, begins running and data is sampled on the eighth cycle of that counter in UART mode, or the fourth cycle of the counter in SIR mode to allow for the shorter logic 0 pulses (half way through a bit period).

The start bit is valid if UARTRXD is still LOW on the eighth cycle of Baud16, otherwise a false start bit is detected and it is ignored.

If the start bit was valid, successive data bits are sampled on every 16th cycle of Baud16 (that is, one bit period later) according to the programmed length of the data characters. The parity bit is then checked if parity mode was enabled.

Lastly, a valid stop bit is confirmed if UARTRXD is HIGH, otherwise a framing error has occurred. When a full word is received, the data is stored in the receive FIFO, with any error bits associated with that word

4.2.3.2.3. Error bits

Three error bits are stored in bits [10:8] of the receive FIFO, and are associated with a particular character. There is an additional error that indicates an overrun error and this is stored in bit 11 of the receive FIFO.

4.2.3.2.4. Overrun bit

The overrun bit is not associated with the character in the receive FIFO. The overrun error is set when the FIFO is full, and the next character is completely received in the shift register. The data in the shift register is overwritten, but it is not written into the FIFO. When an empty location is available in the receive FIFO, and another character is received, the state of the overrun bit is copied into the receive FIFO along with the received character. The overrun state is then cleared. Table 422 lists the bit functions of the receive FIFO.

Table 422. Receive FIFO bit functions

FIFO bit	Function
11	Overrun indicator
10	Break error
9	Parity error
8	Framing error
7:0	Received data

4.2.3.2.5. Disabling the FIFOs

Additionally, you can disable the FIFOs. In this case, the transmit and receive sides of the UART have 1-byte holding registers (the bottom entry of the FIFOs). The overrun bit is set when a word has been received, and the previous one was not yet read. In this implementation, the FIFOs are not physically disabled, but the flags are manipulated to give the illusion of a 1-byte register. When the FIFOs are disabled, a write to the data register bypasses the holding register unless the transmit shift register is already in use.

4.2.3.2.6. System and diagnostic loopback testing

You can perform loopback testing for UART data by setting the Loop Back Enable (LBE) bit to 1 in the Control Register, UARTCR.

Data transmitted on UARTTXD is received on the UARTRXD input.

4.2.3.3. UART character frame

Figure 61. UART character frame.

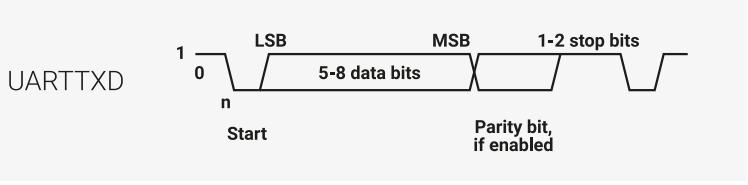

4.2.4. UART hardware flow control

The hardware flow control feature is fully selectable, and enables you to control the serial data flow by using the nUARTRTS output and nUARTCTS input signals. Figure 62 shows how two devices can communicate with each other using hardware flow control.

Figure 62. Hardware flow control between two similar devices.

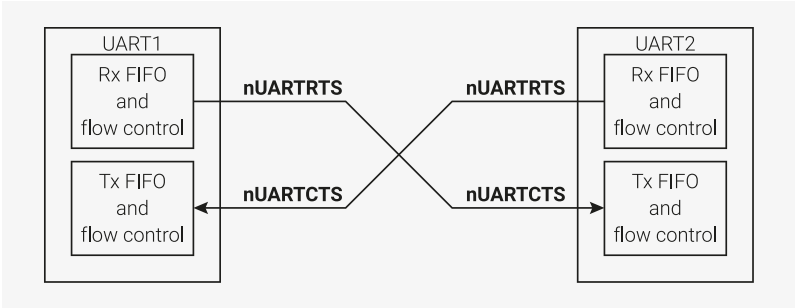

When the RTS flow control is enabled, nUARTRTS is asserted until the receive FIFO is filled up to the programmed watermark level. When the CTS flow control is enabled, the transmitter can only transmit data when nUARTCTS is asserted.

The hardware flow control is selectable using the RTSEn and CTSEn bits in the Control Register, UARTCR. Table 423 lists how you must set the bits to enable RTS and CTS flow control both simultaneously, and independently.

Table 423. Control bits to enable and disable hardware flow control.

UARTCR Register bits		
CTSEn	**RTSEn**	**Description**
1	1	Both RTS and CTS flow control enabled
1	0	Only CTS flow control enabled
0	1	Only RTS flow control enabled
0	0	Both RTS and CTS flow control disabled

NOTE

When RTS flow control is enabled, the software cannot use the RTSEn bit in the Control Register, UARTCR, to control the status of nUARTRTS.

4.2.4.1. RTS flow control

The RTS flow control logic is linked to the programmable receive FIFO watermark levels. When RTS flow control is enabled, the nUARTRTS is asserted until the receive FIFO is filled up to the watermark level. When the receive FIFO watermark level is reached, the nUARTRTS signal is deasserted, indicating that there is no more room to receive any more data. The transmission of data is expected to cease after the current character has been transmitted.

The nUARTRTS signal is reasserted when data has been read out of the receive FIFO so that it is filled to less than the watermark level. If RTS flow control is disabled and the UART is still enabled, then data is received until the receive FIFO is full, or no more data is transmitted to it.

4.2.4.2. CTS flow control

If CTS flow control is enabled, then the transmitter checks the nUARTCTS signal before transmitting the next byte. If the nUARTCTS signal is asserted, it transmits the byte otherwise transmission does not occur.

The data continues to be transmitted while nUARTCTS is asserted, and the transmit FIFO is not empty. If the transmit FIFO is empty and the nUARTCTS signal is asserted no data is transmitted.

If the nUARTCTS signal is deasserted and CTS flow control is enabled, then the current character transmission is completed before stopping. If CTS flow control is disabled and the UART is enabled, then the data continues to be transmitted until the transmit FIFO is empty.

4.2.5. UART DMA Interface

The UART provides an interface to connect to a DMA controller. The DMA operation of the UART is controlled using the DMA Control Register, UARTDMACR. The DMA interface includes the following signals:

For receive:

UARTRXDMASREQ

Single character DMA transfer request, asserted by the UART. For receive, one character consists of up to 12 bits. This signal is asserted when the receive FIFO contains at least one character.

UARTRXDMABREQ

Burst DMA transfer request, asserted by the UART. This signal is asserted when the receive FIFO contains more characters than the programmed watermark level. You can program the watermark level for each FIFO using the Interrupt FIFO Level Select Register, UARTIFLS

UARTRXDMACLR

DMA request clear, asserted by a DMA controller to clear the receive request signals. If DMA burst transfer is requested, the clear signal is asserted during the transfer of the last data in the burst.

For transmit:

UARTTXDMASREQ

Single character DMA transfer request, asserted by the UART. For transmit one character consists of up to eight bits. This signal is asserted when there is at least one empty location in the transmit FIFO.

UARTTXDMABREQ

Burst DMA transfer request, asserted by the UART. This signal is asserted when the transmit FIFO contains less characters than the watermark level. You can program the watermark level for each FIFO using the Interrupt FIFO Level Select Register, UARTIFLS.

UARTTXDMACLR

DMA request clear, asserted by a DMA controller to clear the transmit request signals. If DMA burst transfer is requested, the clear signal is asserted during the transfer of the last data in the burst.

The burst transfer and single transfer request signals are not mutually exclusive, they can both be asserted at the same time. For example, when there is more data than the watermark level in the receive FIFO, the burst transfer request and the single transfer request are asserted. When the amount of data left in the receive FIFO is less than the watermark level, the single request only is asserted. This is useful for situations where the number of characters left to be received in the stream is less than a burst.

For example, if 19 characters have to be received and the watermark level is programmed to be four. The DMA controller then transfers four bursts of four characters and three single transfers to complete the stream.

NOTE

For the remaining three characters the UART cannot assert the burst request.

Each request signal remains asserted until the relevant DMACLR signal is asserted. After the request clear signal is deasserted, a request signal can become active again, depending on the conditions described previously. All request signals are deasserted if the UART is disabled or the relevant DMA enable bit, TXDMAE or RXDMAE, in the DMA Control Register, UARTDMACR, is cleared.

If you disable the FIFOs in the UART then it operates in character mode and only the DMA single transfer mode can operate, because only one character can be transferred to, or from the FIFOs at any time. UARTRXDMASREQ and UARTTXDMASREQ are the only request signals that can be asserted. See the Line Control Register, UARTLCR_H, for information about disabling the FIFOs.

When the UART is in the FIFO enabled mode, data transfers can be made by either single or burst transfers depending on the programmed watermark level and the amount of data in the FIFO. Table 424 lists the trigger points for UARTRXDMABREQ and UARTTXDMABREQ depending on the watermark level, for the transmit and receive FIFOs.

Table 424. DMA trigger points for the transmit and receive FIFOs.

Watermark level	Burst length	
	Transmit (number of empty locations)	Receive (number of filled locations)
1/8	28	4
1/4	24	8
1/2	16	16
3/4	8	24
7/8	4	28

In addition, the DMAONERR bit in the DMA Control Register, UARTDMACR, supports the use of the receive error interrupt, UARTEINTR. It enables the DMA receive request outputs, UARTRXDMASREQ or UARTRXDMABREQ, to be masked out when the UART error interrupt, UARTEINTR, is asserted. The DMA receive request outputs remain inactive until the UARTEINTR is cleared. The DMA transmit request outputs are unaffected.

Figure 63. DMA transfer waveforms.

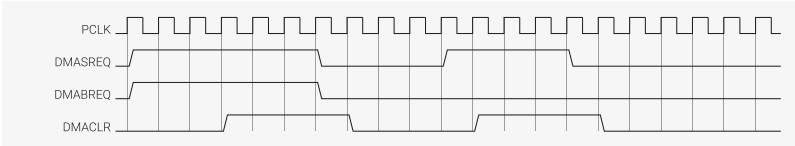

Figure 63 shows the timing diagram for both a single transfer request and a burst transfer request with the appropriate DMACLR signal. The signals are all synchronous to PCLK. For the sake of clarity it is assumed that there is no synchronization of the request signals in the DMA controller.

4.2.6. Interrupts

There are eleven maskable interrupts generated in the UART. On RP2040, only the combined interrupt output, `UARTINTR`, is connected.

You can enable or disable the individual interrupts by changing the mask bits in the Interrupt Mask Set/Clear Register, UARTIMSC. Setting the appropriate mask bit HIGH enables the interrupt.

Provision of individual outputs and the combined interrupt output, enables you to use either a global interrupt service routine, or modular device drivers to handle interrupts.

The transmit and receive dataflow interrupts UARTRXINTR and UARTTXINTR have been separated from the status interrupts. This enables you to use UARTRXINTR and UARTTXINTR so that data can be read or written in response to the FIFO trigger levels.

The error interrupt, UARTEINTR, can be triggered when there is an error in the reception of data. A number of error conditions are possible.

The modem status interrupt, UARTMSINTR, is a combined interrupt of all the individual modem status signals.

The status of the individual interrupt sources can be read either from the Raw Interrupt Status Register, UARTRIS, or from the Masked Interrupt Status Register, UARTMIS.

4.2.6.1. UARTMSINTR

The modem status interrupt is asserted if any of the modem status signals (nUARTCTS, nUARTDCD, nUARTDSR, and nUARTRI) change. It is cleared by writing a 1 to the corresponding bit(s) in the Interrupt Clear Register, UARTICR, depending on the modem status signals that generated the interrupt.

4.2.6.2. UARTRXINTR

The receive interrupt changes state when one of the following events occurs:

- If the FIFOs are enabled and the receive FIFO reaches the programmed trigger level. When this happens, the receive interrupt is asserted HIGH. The receive interrupt is cleared by reading data from the receive FIFO until it becomes less than the trigger level, or by clearing the interrupt.
- If the FIFOs are disabled (have a depth of one location) and data is received thereby filling the location, the receive interrupt is asserted HIGH. The receive interrupt is cleared by performing a single read of the receive FIFO, or by clearing the interrupt.

4.2.6.3. UARTTXINTR

The transmit interrupt changes state when one of the following events occurs:

- If the FIFOs are enabled and the transmit FIFO is equal to or lower than the programmed trigger level then the transmit interrupt is asserted HIGH. The transmit interrupt is cleared by writing data to the transmit FIFO until it becomes greater than the trigger level, or by clearing the interrupt.
- If the FIFOs are disabled (have a depth of one location) and there is no data present in the transmitters single location, the transmit interrupt is asserted HIGH. It is cleared by performing a single write to the transmit FIFO, or by clearing the interrupt.

To update the transmit FIFO you must:

- Write data to the transmit FIFO, either prior to enabling the UART and the interrupts, or after enabling the UART and interrupts.

NOTE

The transmit interrupt is based on a transition through a level, rather than on the level itself. When the interrupt and the UART is enabled before any data is written to the transmit FIFO the interrupt is not set. The interrupt is only set, after written data leaves the single location of the transmit FIFO and it becomes empty.

4.2.6.4. UARTRTINTR

The receive timeout interrupt is asserted when the receive FIFO is not empty, and no more data is received during a 32-bit period. The receive timeout interrupt is cleared either when the FIFO becomes empty through reading all the data (or by reading the holding register), or when a 1 is written to the corresponding bit of the Interrupt Clear Register, UARTICR.

4.2.6.5. UARTEINTR

The error interrupt is asserted when an error occurs in the reception of data by the UART. The interrupt can be caused by a number of different error conditions:

- framing
- parity
- break
- overrun.

You can determine the cause of the interrupt by reading the Raw Interrupt Status Register, UARTRIS, or the Masked Interrupt Status Register, UARTMIS. It can be cleared by writing to the relevant bits of the Interrupt Clear Register, UARTICR (bits 7 to 10 are the error clear bits).

4.2.6.6. UARTINTR

The interrupts are also combined into a single output, that is an OR function of the individual masked sources. You can connect this output to a system interrupt controller to provide another level of masking on a individual peripheral basis.

The combined UART interrupt is asserted if any of the individual interrupts are asserted and enabled.

4.2.7. Programmer's Model

The SDK provides a `uart_init` function to configure the UART with a particular baud rate. Once the UART is initialised, the user must configure a GPIO pin as `UART_TX` and `UART_RX`. See Section 2.19.5.1 for more information on selecting a GPIO function.

To initialise the UART, the `uart_init` function takes the following steps:

- Deassert the reset
- Enable `clk_peri`
- Set enable bits in the control register
- Enable the FIFOs
- Set the baud rate divisors
- Set the format

SDK: https://github.com/raspberrypi/pico-sdk/blob/master/src/rp2_common/hardware_uart/uart.c Lines 42 - 92

```
42 uint uart_init(uart_inst_t *uart, uint baudrate) {
43     invalid_params_if(HARDWARE_UART, uart != uart0 && uart != uart1);
44
45     if (uart_clock_get_hz(uart) == 0) {
46         return 0;
47     }
48
49     uart_reset(uart);
50     uart_unreset(uart);
51
52     uart_set_translate_crlf(uart, PICO_UART_DEFAULT_CRLF);
53
54     // Any LCR writes need to take place before enabling the UART
55     uint baud = uart_set_baudrate(uart, baudrate);
56
57     // inline the uart_set_format() call, as we don't need the CR disable/re-enable
58     // protection, and also many people will never call it again, so having
59     // the generic function is not useful, and much bigger than this inlined
60     // code which is only a handful of instructions.
61     //
62     // The UART_UARTLCR_H_FEN_BITS setting is combined as well as it is the same register
63 #ifdef 0
64     uart_set_format(uart, 8, 1, UART_PARITY_NONE);
65     // Enable FIFOs (must be before setting UARTEN, as this is an LCR access)
66     hw_set_bits(&uart_get_hw(uart)->lcr_h, UART_UARTLCR_H_FEN_BITS);
67 #else
68     uint data_bits = 8;
69     uint stop_bits = 1;
70     uint parity = UART_PARITY_NONE;
71     hw_write_masked(&uart_get_hw(uart)->lcr_h,
72         ((data_bits - 5u) << UART_UARTLCR_H_WLEN_LSB) |
73             ((stop_bits - 1u) << UART_UARTLCR_H_STP2_LSB) |
74             (bool_to_bit(parity != UART_PARITY_NONE) << UART_UARTLCR_H_PEN_LSB) |
75             (bool_to_bit(parity == UART_PARITY_EVEN) << UART_UARTLCR_H_EPS_LSB) |
```

```
76              UART_UARTLCR_H_FEN_BITS,
77          UART_UARTLCR_H_WLEN_BITS | UART_UARTLCR_H_STP2_BITS |
78              UART_UARTLCR_H_PEN_BITS | UART_UARTLCR_H_EPS_BITS |
79              UART_UARTLCR_H_FEN_BITS);
80 #endif
81
82     // Enable the UART, both TX and RX
83     uart_get_hw(uart)->cr = UART_UARTCR_UARTEN_BITS | UART_UARTCR_TXE_BITS |
   UART_UARTCR_RXE_BITS;
84     // Always enable DREQ signals -- no harm in this if DMA is not listening
85     uart_get_hw(uart)->dmacr = UART_UARTDMACR_TXDMAE_BITS | UART_UARTDMACR_RXDMAE_BITS;
86
87     return baud;
88 }
```

4.2.7.1. Baud Rate Calculation

The uart baud rate is derived from dividing `clk_peri`.

If the required baud rate is 115200 and UARTCLK = 125MHz then:

Baud Rate Divisor = (125 * 10^6)/(16 * 115200) ~= 67.817

Therefore, BRDI = 67 and BRDF = 0.817,

Therefore, fractional part, m = integer((0.817 * 64) + 0.5) = 52

Generated baud rate divider = 67 + 52/64 = 67.8125

Generated baud rate = (125 * 10^6)/(16 * 67.8125) ~= 115207

Error = (abs(115200 - 115207) / 115200) * 100 ~= 0.006%

SDK: https://github.com/raspberrypi/pico-sdk/blob/master/src/rp2_common/hardware_uart/uart.c Lines 155 - 180

```
155 uint uart_set_baudrate(uart_inst_t *uart, uint baudrate) {
156     invalid_params_if(HARDWARE_UART, baudrate == 0);
157     uint32_t baud_rate_div = (8 * uart_clock_get_hz(uart) / baudrate) + 1;
158     uint32_t baud_ibrd = baud_rate_div >> 7;
159     uint32_t baud_fbrd;
160
161     if (baud_ibrd == 0) {
162         baud_ibrd = 1;
163         baud_fbrd = 0;
164     } else if (baud_ibrd >= 65535) {
165         baud_ibrd = 65535;
166         baud_fbrd = 0;
167     }  else {
168         baud_fbrd = (baud_rate_div & 0x7f) >> 1;
169     }
170
171     uart_get_hw(uart)->ibrd = baud_ibrd;
172     uart_get_hw(uart)->fbrd = baud_fbrd;
173
174     // PL011 needs a (dummy) LCR_H write to latch in the divisors.
175     // We don't want to actually change LCR_H contents here.
176     uart_write_lcr_bits_masked(uart, 0, 0);
177
178     // See datasheet
179     return (4 * uart_clock_get_hz(uart)) / (64 * baud_ibrd + baud_fbrd);
180 }
```

4.2.8. List of Registers

The UART0 and UART1 registers start at base addresses of `0x40034000` and `0x40038000` respectively (defined as UART0_BASE and UART1_BASE in SDK).

Table 425. List of UART registers

Offset	Name	Info
0x000	UARTDR	Data Register, UARTDR
0x004	UARTRSR	Receive Status Register/Error Clear Register, UARTRSR/UARTECR
0x018	UARTFR	Flag Register, UARTFR
0x020	UARTILPR	IrDA Low-Power Counter Register, UARTILPR
0x024	UARTIBRD	Integer Baud Rate Register, UARTIBRD
0x028	UARTFBRD	Fractional Baud Rate Register, UARTFBRD
0x02c	UARTLCR_H	Line Control Register, UARTLCR_H
0x030	UARTCR	Control Register, UARTCR
0x034	UARTIFLS	Interrupt FIFO Level Select Register, UARTIFLS
0x038	UARTIMSC	Interrupt Mask Set/Clear Register, UARTIMSC
0x03c	UARTRIS	Raw Interrupt Status Register, UARTRIS
0x040	UARTMIS	Masked Interrupt Status Register, UARTMIS
0x044	UARTICR	Interrupt Clear Register, UARTICR
0x048	UARTDMACR	DMA Control Register, UARTDMACR
0xfe0	UARTPERIPHID0	UARTPeriphID0 Register
0xfe4	UARTPERIPHID1	UARTPeriphID1 Register
0xfe8	UARTPERIPHID2	UARTPeriphID2 Register
0xfec	UARTPERIPHID3	UARTPeriphID3 Register
0xff0	UARTPCELLID0	UARTPCellID0 Register
0xff4	UARTPCELLID1	UARTPCellID1 Register
0xff8	UARTPCELLID2	UARTPCellID2 Register
0xffc	UARTPCELLID3	UARTPCellID3 Register

UART: UARTDR Register

Offset: 0x000

Description

Data Register, UARTDR

Table 426. UARTDR Register

Bits	Description	Type	Reset
31:12	Reserved.	-	-
11	**OE**: Overrun error. This bit is set to 1 if data is received and the receive FIFO is already full. This is cleared to 0 once there is an empty space in the FIFO and a new character can be written to it.	RO	-

Bits	Description	Type	Reset
10	**BE**: Break error. This bit is set to 1 if a break condition was detected, indicating that the received data input was held LOW for longer than a full-word transmission time (defined as start, data, parity and stop bits). In FIFO mode, this error is associated with the character at the top of the FIFO. When a break occurs, only one 0 character is loaded into the FIFO. The next character is only enabled after the receive data input goes to a 1 (marking state), and the next valid start bit is received.	RO	-
9	**PE**: Parity error. When set to 1, it indicates that the parity of the received data character does not match the parity that the EPS and SPS bits in the Line Control Register, UARTLCR_H. In FIFO mode, this error is associated with the character at the top of the FIFO.	RO	-
8	**FE**: Framing error. When set to 1, it indicates that the received character did not have a valid stop bit (a valid stop bit is 1). In FIFO mode, this error is associated with the character at the top of the FIFO.	RO	-
7:0	**DATA**: Receive (read) data character. Transmit (write) data character.	RWF	-

UART: UARTRSR Register

Offset: 0x004

Description

Receive Status Register/Error Clear Register, UARTRSR/UARTECR

Table 427. UARTRSR Register

Bits	Description	Type	Reset
31:4	Reserved.	-	-
3	**OE**: Overrun error. This bit is set to 1 if data is received and the FIFO is already full. This bit is cleared to 0 by a write to UARTECR. The FIFO contents remain valid because no more data is written when the FIFO is full, only the contents of the shift register are overwritten. The CPU must now read the data, to empty the FIFO.	WC	0x0
2	**BE**: Break error. This bit is set to 1 if a break condition was detected, indicating that the received data input was held LOW for longer than a full-word transmission time (defined as start, data, parity, and stop bits). This bit is cleared to 0 after a write to UARTECR. In FIFO mode, this error is associated with the character at the top of the FIFO. When a break occurs, only one 0 character is loaded into the FIFO. The next character is only enabled after the receive data input goes to a 1 (marking state) and the next valid start bit is received.	WC	0x0
1	**PE**: Parity error. When set to 1, it indicates that the parity of the received data character does not match the parity that the EPS and SPS bits in the Line Control Register, UARTLCR_H. This bit is cleared to 0 by a write to UARTECR. In FIFO mode, this error is associated with the character at the top of the FIFO.	WC	0x0
0	**FE**: Framing error. When set to 1, it indicates that the received character did not have a valid stop bit (a valid stop bit is 1). This bit is cleared to 0 by a write to UARTECR. In FIFO mode, this error is associated with the character at the top of the FIFO.	WC	0x0

UART: UARTFR Register

Offset: 0x018

Description

Flag Register, UARTFR

Table 428. UARTFR Register

Bits	Description	Type	Reset
31:9	Reserved.	-	-
8	**RI**: Ring indicator. This bit is the complement of the UART ring indicator, nUARTRI, modem status input. That is, the bit is 1 when nUARTRI is LOW.	RO	-
7	**TXFE**: Transmit FIFO empty. The meaning of this bit depends on the state of the FEN bit in the Line Control Register, UARTLCR_H. If the FIFO is disabled, this bit is set when the transmit holding register is empty. If the FIFO is enabled, the TXFE bit is set when the transmit FIFO is empty. This bit does not indicate if there is data in the transmit shift register.	RO	0x1
6	**RXFF**: Receive FIFO full. The meaning of this bit depends on the state of the FEN bit in the UARTLCR_H Register. If the FIFO is disabled, this bit is set when the receive holding register is full. If the FIFO is enabled, the RXFF bit is set when the receive FIFO is full.	RO	0x0
5	**TXFF**: Transmit FIFO full. The meaning of this bit depends on the state of the FEN bit in the UARTLCR_H Register. If the FIFO is disabled, this bit is set when the transmit holding register is full. If the FIFO is enabled, the TXFF bit is set when the transmit FIFO is full.	RO	0x0
4	**RXFE**: Receive FIFO empty. The meaning of this bit depends on the state of the FEN bit in the UARTLCR_H Register. If the FIFO is disabled, this bit is set when the receive holding register is empty. If the FIFO is enabled, the RXFE bit is set when the receive FIFO is empty.	RO	0x1
3	**BUSY**: UART busy. If this bit is set to 1, the UART is busy transmitting data. This bit remains set until the complete byte, including all the stop bits, has been sent from the shift register. This bit is set as soon as the transmit FIFO becomes non-empty, regardless of whether the UART is enabled or not.	RO	0x0
2	**DCD**: Data carrier detect. This bit is the complement of the UART data carrier detect, nUARTDCD, modem status input. That is, the bit is 1 when nUARTDCD is LOW.	RO	-
1	**DSR**: Data set ready. This bit is the complement of the UART data set ready, nUARTDSR, modem status input. That is, the bit is 1 when nUARTDSR is LOW.	RO	-
0	**CTS**: Clear to send. This bit is the complement of the UART clear to send, nUARTCTS, modem status input. That is, the bit is 1 when nUARTCTS is LOW.	RO	-

UART: UARTILPR Register

Offset: 0x020

Description

IrDA Low-Power Counter Register, UARTILPR

Table 429. UARTILPR Register

Bits	Description	Type	Reset
31:8	Reserved.	-	-
7:0	**ILPDVSR**: 8-bit low-power divisor value. These bits are cleared to 0 at reset.	RW	0x00

UART: UARTIBRD Register

Offset: 0x024

Description

Integer Baud Rate Register, UARTIBRD

Table 430. UARTIBRD Register

Bits	Description	Type	Reset
31:16	Reserved.	-	-
15:0	**BAUD_DIVINT**: The integer baud rate divisor. These bits are cleared to 0 on reset.	RW	0x0000

UART: UARTFBRD Register

Offset: 0x028

Description

Fractional Baud Rate Register, UARTFBRD

Table 431. UARTFBRD Register

Bits	Description	Type	Reset
31:6	Reserved.	-	-
5:0	**BAUD_DIVFRAC**: The fractional baud rate divisor. These bits are cleared to 0 on reset.	RW	0x00

UART: UARTLCR_H Register

Offset: 0x02c

Description

Line Control Register, UARTLCR_H

Table 432. UARTLCR_H Register

Bits	Description	Type	Reset
31:8	Reserved.	-	-
7	**SPS**: Stick parity select. 0 = stick parity is disabled 1 = either: * if the EPS bit is 0 then the parity bit is transmitted and checked as a 1 * if the EPS bit is 1 then the parity bit is transmitted and checked as a 0. This bit has no effect when the PEN bit disables parity checking and generation.	RW	0x0
6:5	**WLEN**: Word length. These bits indicate the number of data bits transmitted or received in a frame as follows: b11 = 8 bits b10 = 7 bits b01 = 6 bits b00 = 5 bits.	RW	0x0
4	**FEN**: Enable FIFOs: 0 = FIFOs are disabled (character mode) that is, the FIFOs become 1-byte-deep holding registers 1 = transmit and receive FIFO buffers are enabled (FIFO mode).	RW	0x0
3	**STP2**: Two stop bits select. If this bit is set to 1, two stop bits are transmitted at the end of the frame. The receive logic does not check for two stop bits being received.	RW	0x0
2	**EPS**: Even parity select. Controls the type of parity the UART uses during transmission and reception: 0 = odd parity. The UART generates or checks for an odd number of 1s in the data and parity bits. 1 = even parity. The UART generates or checks for an even number of 1s in the data and parity bits. This bit has no effect when the PEN bit disables parity checking and generation.	RW	0x0
1	**PEN**: Parity enable: 0 = parity is disabled and no parity bit added to the data frame 1 = parity checking and generation is enabled.	RW	0x0

Bits	Description	Type	Reset
0	**BRK**: Send break. If this bit is set to 1, a low-level is continually output on the UARTTXD output, after completing transmission of the current character. For the proper execution of the break command, the software must set this bit for at least two complete frames. For normal use, this bit must be cleared to 0.	RW	0x0

UART: UARTCR Register

Offset: 0x030

Description

Control Register, UARTCR

Table 433. UARTCR Register

Bits	Description	Type	Reset
31:16	Reserved.	-	-
15	**CTSEN**: CTS hardware flow control enable. If this bit is set to 1, CTS hardware flow control is enabled. Data is only transmitted when the nUARTCTS signal is asserted.	RW	0x0
14	**RTSEN**: RTS hardware flow control enable. If this bit is set to 1, RTS hardware flow control is enabled. Data is only requested when there is space in the receive FIFO for it to be received.	RW	0x0
13	**OUT2**: This bit is the complement of the UART Out2 (nUARTOut2) modem status output. That is, when the bit is programmed to a 1, the output is 0. For DTE this can be used as Ring Indicator (RI).	RW	0x0
12	**OUT1**: This bit is the complement of the UART Out1 (nUARTOut1) modem status output. That is, when the bit is programmed to a 1 the output is 0. For DTE this can be used as Data Carrier Detect (DCD).	RW	0x0
11	**RTS**: Request to send. This bit is the complement of the UART request to send, nUARTRTS, modem status output. That is, when the bit is programmed to a 1 then nUARTRTS is LOW.	RW	0x0
10	**DTR**: Data transmit ready. This bit is the complement of the UART data transmit ready, nUARTDTR, modem status output. That is, when the bit is programmed to a 1 then nUARTDTR is LOW.	RW	0x0
9	**RXE**: Receive enable. If this bit is set to 1, the receive section of the UART is enabled. Data reception occurs for either UART signals or SIR signals depending on the setting of the SIREN bit. When the UART is disabled in the middle of reception, it completes the current character before stopping.	RW	0x1
8	**TXE**: Transmit enable. If this bit is set to 1, the transmit section of the UART is enabled. Data transmission occurs for either UART signals, or SIR signals depending on the setting of the SIREN bit. When the UART is disabled in the middle of transmission, it completes the current character before stopping.	RW	0x1

Bits	Description	Type	Reset
7	**LBE**: Loopback enable. If this bit is set to 1 and the SIREN bit is set to 1 and the SIRTEST bit in the Test Control Register, UARTTCR is set to 1, then the nSIROUT path is inverted, and fed through to the SIRIN path. The SIRTEST bit in the test register must be set to 1 to override the normal half-duplex SIR operation. This must be the requirement for accessing the test registers during normal operation, and SIRTEST must be cleared to 0 when loopback testing is finished. This feature reduces the amount of external coupling required during system test. If this bit is set to 1, and the SIRTEST bit is set to 0, the UARTTXD path is fed through to the UARTRXD path. In either SIR mode or UART mode, when this bit is set, the modem outputs are also fed through to the modem inputs. This bit is cleared to 0 on reset, to disable loopback.	RW	0x0
6:3	Reserved.	-	-
2	**SIRLP**: SIR low-power IrDA mode. This bit selects the IrDA encoding mode. If this bit is cleared to 0, low-level bits are transmitted as an active high pulse with a width of 3 / 16th of the bit period. If this bit is set to 1, low-level bits are transmitted with a pulse width that is 3 times the period of the IrLPBaud16 input signal, regardless of the selected bit rate. Setting this bit uses less power, but might reduce transmission distances.	RW	0x0
1	**SIREN**: SIR enable: 0 = IrDA SIR ENDEC is disabled. nSIROUT remains LOW (no light pulse generated), and signal transitions on SIRIN have no effect. 1 = IrDA SIR ENDEC is enabled. Data is transmitted and received on nSIROUT and SIRIN. UARTTXD remains HIGH, in the marking state. Signal transitions on UARTRXD or modem status inputs have no effect. This bit has no effect if the UARTEN bit disables the UART.	RW	0x0
0	**UARTEN**: UART enable: 0 = UART is disabled. If the UART is disabled in the middle of transmission or reception, it completes the current character before stopping. 1 = the UART is enabled. Data transmission and reception occurs for either UART signals or SIR signals depending on the setting of the SIREN bit.	RW	0x0

UART: UARTIFLS Register

Offset: 0x034

Description

Interrupt FIFO Level Select Register, UARTIFLS

Table 434. UARTIFLS Register

Bits	Description	Type	Reset
31:6	Reserved.	-	-
5:3	**RXIFLSEL**: Receive interrupt FIFO level select. The trigger points for the receive interrupt are as follows: b000 = Receive FIFO becomes >= 1 / 8 full b001 = Receive FIFO becomes >= 1 / 4 full b010 = Receive FIFO becomes >= 1 / 2 full b011 = Receive FIFO becomes >= 3 / 4 full b100 = Receive FIFO becomes >= 7 / 8 full b101-b111 = reserved.	RW	0x2
2:0	**TXIFLSEL**: Transmit interrupt FIFO level select. The trigger points for the transmit interrupt are as follows: b000 = Transmit FIFO becomes <= 1 / 8 full b001 = Transmit FIFO becomes <= 1 / 4 full b010 = Transmit FIFO becomes <= 1 / 2 full b011 = Transmit FIFO becomes <= 3 / 4 full b100 = Transmit FIFO becomes <= 7 / 8 full b101-b111 = reserved.	RW	0x2

UART: UARTIMSC Register

Offset: 0x038

Description

Interrupt Mask Set/Clear Register, UARTIMSC

Table 435. UARTIMSC Register

Bits	Description	Type	Reset
31:11	Reserved.	-	-
10	**OEIM**: Overrun error interrupt mask. A read returns the current mask for the UARTOEINTR interrupt. On a write of 1, the mask of the UARTOEINTR interrupt is set. A write of 0 clears the mask.	RW	0x0
9	**BEIM**: Break error interrupt mask. A read returns the current mask for the UARTBEINTR interrupt. On a write of 1, the mask of the UARTBEINTR interrupt is set. A write of 0 clears the mask.	RW	0x0
8	**PEIM**: Parity error interrupt mask. A read returns the current mask for the UARTPEINTR interrupt. On a write of 1, the mask of the UARTPEINTR interrupt is set. A write of 0 clears the mask.	RW	0x0
7	**FEIM**: Framing error interrupt mask. A read returns the current mask for the UARTFEINTR interrupt. On a write of 1, the mask of the UARTFEINTR interrupt is set. A write of 0 clears the mask.	RW	0x0
6	**RTIM**: Receive timeout interrupt mask. A read returns the current mask for the UARTRTINTR interrupt. On a write of 1, the mask of the UARTRTINTR interrupt is set. A write of 0 clears the mask.	RW	0x0
5	**TXIM**: Transmit interrupt mask. A read returns the current mask for the UARTTXINTR interrupt. On a write of 1, the mask of the UARTTXINTR interrupt is set. A write of 0 clears the mask.	RW	0x0
4	**RXIM**: Receive interrupt mask. A read returns the current mask for the UARTRXINTR interrupt. On a write of 1, the mask of the UARTRXINTR interrupt is set. A write of 0 clears the mask.	RW	0x0
3	**DSRMIM**: nUARTDSR modem interrupt mask. A read returns the current mask for the UARTDSRINTR interrupt. On a write of 1, the mask of the UARTDSRINTR interrupt is set. A write of 0 clears the mask.	RW	0x0
2	**DCDMIM**: nUARTDCD modem interrupt mask. A read returns the current mask for the UARTDCDINTR interrupt. On a write of 1, the mask of the UARTDCDINTR interrupt is set. A write of 0 clears the mask.	RW	0x0
1	**CTSMIM**: nUARTCTS modem interrupt mask. A read returns the current mask for the UARTCTSINTR interrupt. On a write of 1, the mask of the UARTCTSINTR interrupt is set. A write of 0 clears the mask.	RW	0x0
0	**RIMIM**: nUARTRI modem interrupt mask. A read returns the current mask for the UARTRIINTR interrupt. On a write of 1, the mask of the UARTRIINTR interrupt is set. A write of 0 clears the mask.	RW	0x0

UART: UARTRIS Register

Offset: 0x03c

Description

Raw Interrupt Status Register, UARTRIS

Table 436. UARTRIS Register

Bits	Description	Type	Reset
31:11	Reserved.	-	-

Bits	Description	Type	Reset
10	**OERIS**: Overrun error interrupt status. Returns the raw interrupt state of the UARTOEINTR interrupt.	RO	0x0
9	**BERIS**: Break error interrupt status. Returns the raw interrupt state of the UARTBEINTR interrupt.	RO	0x0
8	**PERIS**: Parity error interrupt status. Returns the raw interrupt state of the UARTPEINTR interrupt.	RO	0x0
7	**FERIS**: Framing error interrupt status. Returns the raw interrupt state of the UARTFEINTR interrupt.	RO	0x0
6	**RTRIS**: Receive timeout interrupt status. Returns the raw interrupt state of the UARTRTINTR interrupt. a	RO	0x0
5	**TXRIS**: Transmit interrupt status. Returns the raw interrupt state of the UARTTXINTR interrupt.	RO	0x0
4	**RXRIS**: Receive interrupt status. Returns the raw interrupt state of the UARTRXINTR interrupt.	RO	0x0
3	**DSRRMIS**: nUARTDSR modem interrupt status. Returns the raw interrupt state of the UARTDSRINTR interrupt.	RO	-
2	**DCDRMIS**: nUARTDCD modem interrupt status. Returns the raw interrupt state of the UARTDCDINTR interrupt.	RO	-
1	**CTSRMIS**: nUARTCTS modem interrupt status. Returns the raw interrupt state of the UARTCTSINTR interrupt.	RO	-
0	**RIRMIS**: nUARTRI modem interrupt status. Returns the raw interrupt state of the UARTRIINTR interrupt.	RO	-

UART: UARTMIS Register

Offset: 0x040

Description

Masked Interrupt Status Register, UARTMIS

Table 437. UARTMIS Register

Bits	Description	Type	Reset
31:11	Reserved.	-	-
10	**OEMIS**: Overrun error masked interrupt status. Returns the masked interrupt state of the UARTOEINTR interrupt.	RO	0x0
9	**BEMIS**: Break error masked interrupt status. Returns the masked interrupt state of the UARTBEINTR interrupt.	RO	0x0
8	**PEMIS**: Parity error masked interrupt status. Returns the masked interrupt state of the UARTPEINTR interrupt.	RO	0x0
7	**FEMIS**: Framing error masked interrupt status. Returns the masked interrupt state of the UARTFEINTR interrupt.	RO	0x0
6	**RTMIS**: Receive timeout masked interrupt status. Returns the masked interrupt state of the UARTRTINTR interrupt.	RO	0x0
5	**TXMIS**: Transmit masked interrupt status. Returns the masked interrupt state of the UARTTXINTR interrupt.	RO	0x0

Bits	Description	Type	Reset
4	**RXMIS**: Receive masked interrupt status. Returns the masked interrupt state of the UARTRXINTR interrupt.	RO	0x0
3	**DSRMMIS**: nUARTDSR modem masked interrupt status. Returns the masked interrupt state of the UARTDSRINTR interrupt.	RO	-
2	**DCDMMIS**: nUARTDCD modem masked interrupt status. Returns the masked interrupt state of the UARTDCDINTR interrupt.	RO	-
1	**CTSMMIS**: nUARTCTS modem masked interrupt status. Returns the masked interrupt state of the UARTCTSINTR interrupt.	RO	-
0	**RIMMIS**: nUARTRI modem masked interrupt status. Returns the masked interrupt state of the UARTRIINTR interrupt.	RO	-

UART: UARTICR Register

Offset: 0x044

Description

Interrupt Clear Register, UARTICR

Table 438. UARTICR Register

Bits	Description	Type	Reset
31:11	Reserved.	-	-
10	**OEIC**: Overrun error interrupt clear. Clears the UARTOEINTR interrupt.	WC	-
9	**BEIC**: Break error interrupt clear. Clears the UARTBEINTR interrupt.	WC	-
8	**PEIC**: Parity error interrupt clear. Clears the UARTPEINTR interrupt.	WC	-
7	**FEIC**: Framing error interrupt clear. Clears the UARTFEINTR interrupt.	WC	-
6	**RTIC**: Receive timeout interrupt clear. Clears the UARTRTINTR interrupt.	WC	-
5	**TXIC**: Transmit interrupt clear. Clears the UARTTXINTR interrupt.	WC	-
4	**RXIC**: Receive interrupt clear. Clears the UARTRXINTR interrupt.	WC	-
3	**DSRMIC**: nUARTDSR modem interrupt clear. Clears the UARTDSRINTR interrupt.	WC	-
2	**DCDMIC**: nUARTDCD modem interrupt clear. Clears the UARTDCDINTR interrupt.	WC	-
1	**CTSMIC**: nUARTCTS modem interrupt clear. Clears the UARTCTSINTR interrupt.	WC	-
0	**RIMIC**: nUARTRI modem interrupt clear. Clears the UARTRIINTR interrupt.	WC	-

UART: UARTDMACR Register

Offset: 0x048

Description

DMA Control Register, UARTDMACR

Table 439. UARTDMACR Register

Bits	Description	Type	Reset
31:3	Reserved.	-	-

Bits	Description	Type	Reset
2	**DMAONERR**: DMA on error. If this bit is set to 1, the DMA receive request outputs, UARTRXDMASREQ or UARTRXDMABREQ, are disabled when the UART error interrupt is asserted.	RW	0x0
1	**TXDMAE**: Transmit DMA enable. If this bit is set to 1, DMA for the transmit FIFO is enabled.	RW	0x0
0	**RXDMAE**: Receive DMA enable. If this bit is set to 1, DMA for the receive FIFO is enabled.	RW	0x0

UART: UARTPERIPHID0 Register

Offset: 0xfe0

Description

UARTPeriphID0 Register

Table 440. UARTPERIPHID0 Register

Bits	Description	Type	Reset
31:8	Reserved.	-	-
7:0	**PARTNUMBER0**: These bits read back as 0x11	RO	0x11

UART: UARTPERIPHID1 Register

Offset: 0xfe4

Description

UARTPeriphID1 Register

Table 441. UARTPERIPHID1 Register

Bits	Description	Type	Reset
31:8	Reserved.	-	-
7:4	**DESIGNER0**: These bits read back as 0x1	RO	0x1
3:0	**PARTNUMBER1**: These bits read back as 0x0	RO	0x0

UART: UARTPERIPHID2 Register

Offset: 0xfe8

Description

UARTPeriphID2 Register

Table 442. UARTPERIPHID2 Register

Bits	Description	Type	Reset
31:8	Reserved.	-	-
7:4	**REVISION**: This field depends on the revision of the UART: r1p0 0x0 r1p1 0x1 r1p3 0x2 r1p4 0x2 r1p5 0x3	RO	0x3
3:0	**DESIGNER1**: These bits read back as 0x4	RO	0x4

UART: UARTPERIPHID3 Register

Offset: 0xfec

Description

UARTPeriphID3 Register

Table 443. UARTPERIPHID3 Register

Bits	Description	Type	Reset
31:8	Reserved.	-	-
7:0	**CONFIGURATION**: These bits read back as 0x00	RO	0x00

UART: UARTPCELLID0 Register

Offset: 0xff0

Description

UARTPCellID0 Register

Table 444. UARTPCELLID0 Register

Bits	Description	Type	Reset
31:8	Reserved.	-	-
7:0	**UARTPCELLID0**: These bits read back as 0x0D	RO	0x0d

UART: UARTPCELLID1 Register

Offset: 0xff4

Description

UARTPCellID1 Register

Table 445. UARTPCELLID1 Register

Bits	Description	Type	Reset
31:8	Reserved.	-	-
7:0	**UARTPCELLID1**: These bits read back as 0xF0	RO	0xf0

UART: UARTPCELLID2 Register

Offset: 0xff8

Description

UARTPCellID2 Register

Table 446. UARTPCELLID2 Register

Bits	Description	Type	Reset
31:8	Reserved.	-	-
7:0	**UARTPCELLID2**: These bits read back as 0x05	RO	0x05

UART: UARTPCELLID3 Register

Offset: 0xffc

Description

UARTPCellID3 Register

Table 447. UARTPCELLID3 Register

Bits	Description	Type	Reset
31:8	Reserved.	-	-
7:0	**UARTPCELLID3**: These bits read back as 0xB1	RO	0xb1

4.3. I2C

> **Synopsys Documentation**
>
> Synopsys Proprietary. Used with permission.

I2C is a commonly used 2-wire interface that can be used to connect devices for low speed data transfer using clock `SCL` and data `SDA` wires.

RP2040 has two identical instances of an I2C controller. The external pins of each controller are connected to GPIO pins as defined in the GPIO muxing table in Section 2.19.2. The muxing options give some IO flexibility.

4.3.1. Features

Each I2C controller is based on a configuration of the Synopsys DW_apb_i2c (v2.01) IP. The following features are supported:

- Master or Slave (Default to Master mode)
- Standard mode, Fast mode or Fast mode plus
- Default slave address 0x055
- Supports 10-bit addressing in Master mode
- 16-element transmit buffer
- 16-element receive buffer
- Can be driven from DMA
- Can generate interrupts

4.3.1.1. Standard

The I2C controller was designed for I2C Bus specification, version 6.0, dated April 2014.

4.3.1.2. Clocking

All clocks in the I2C controller are connected to `clk_sys`, including `ic_clk` which is mentioned in later sections. The I2C clock is generated by dividing down this clock, controlled by registers inside the block.

4.3.1.3. IOs

Each controller must connect its clock `SCL` and data `SDA` to one pair of GPIOs. The I2C standard requires that drivers drive a signal low, or when not driven the signal will be pulled high. This applies to SCL and SDA. The GPIO pads should be configured for:

- pull-up enabled
- slew rate limited
- schmitt trigger enabled

NOTE

There should also be external pull-ups on the board as the internal pad pull-ups may not be strong enough to pull up external circuits.

4.3.2. IP Configuration

I2C configuration details (each instance is fully independent):

- 32-bit APB access
- Supports Standard mode, Fast mode or Fast mode plus (not High speed)
- Default slave address of 0x055
- Master or Slave mode
- Master by default (Slave mode disabled at reset)
- 10-bit addressing supported in master mode (7-bit by default)
- 16 entry transmit buffer
- 16 entry receive buffer
- Allows restart conditions when a master (can be disabled for legacy device support)
- Configurable timing to adjust TsuDAT/ThDAT
- General calls responded to on reset
- Interface to DMA
- Single interrupt output
- Configurable timing to adjust clock frequency
- Spike suppression (default 7 clk_sys cycles)
- Can NACK after data received by Slave
- Hold transfer when TX FIFO empty
- Hold bus until space available in RX FIFO
- Restart detect interrupt in Slave mode
- Optional blocking Master commands (not enabled by default)

4.3.3. I2C Overview

The I2C bus is a 2-wire serial interface, consisting of a serial data line `SDA` and a serial clock `SCL`. These wires carry information between the devices connected to the bus. Each device is recognized by a unique address and can operate as either a “transmitter” or “receiver”, depending on the function of the device. Devices can also be considered as masters or slaves when performing data transfers. A master is a device that initiates a data transfer on the bus and generates the clock signals to permit that transfer. At that time, any device addressed is considered a slave.

NOTE

The I2C block must only be programmed to operate in either master OR slave mode only. Operating as a master and slave simultaneously is not supported.

The I2C block can operate in these modes:

- standard mode (with data rates from 0 to 100kbps),
- fast mode (with data rates less than or equal to 400kbps),
- fast mode plus (with data rates less than or equal to 1000kbps).

These modes are not supported:

- High-speed mode (with data rates less than or equal to 3.4Mbps),
- Ultra-Fast Speed Mode (with data rates less than or equal to 5Mbps).

NOTE

References to fast mode also apply to fast mode plus, unless specifically stated otherwise.

The I2C block can communicate with devices in one of these modes as long as they are attached to the bus. Additionally, fast mode devices are downward compatible. For instance, fast mode devices can communicate with standard mode devices in 0 to 100kbps I2C bus system. However standard mode devices are not upward compatible and should not be incorporated in a fast-mode I2C bus system as they cannot follow the higher transfer rate and unpredictable states would occur.

An example of high-speed mode devices are LCD displays, high-bit count ADCs, and high capacity EEPROMs. These devices typically need to transfer large amounts of data. Most maintenance and control applications, the common use for the I2C bus, typically operate at 100kHz (in standard and fast modes). Any DW_apb_i2c device can be attached to an I2C-bus and every device can talk with any master, passing information back and forth. There needs to be at least one master (such as a microcontroller or DSP) on the bus but there can be multiple masters, which require them to arbitrate for ownership. Multiple masters and arbitration are explained later in this chapter. The I2C block does not support SMBus and PMBus protocols (for System Management and Power management).

The DW_apb_i2c is made up of an AMBA APB slave interface, an I2C interface, and FIFO logic to maintain coherency between the two interfaces. The blocks of the component are illustrated in Figure 64.

Figure 64. I2C Block diagram

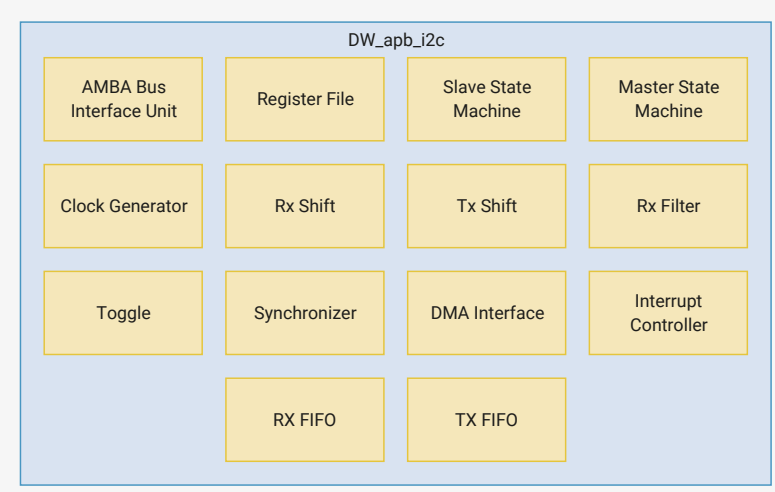

The following define the functions of the blocks in Figure 64:

- **AMBA Bus Interface Unit** — Takes the APB interface signals and translates them into a common generic interface that allows the register file to be bus protocol-agnostic.

- **Register File** — Contains configuration registers and is the interface with software.
- **Slave State Machine** — Follows the protocol for a slave and monitors bus for address match.
- **Master State Machine** — Generates the I2C protocol for the master transfers.
- **Clock Generator** — Calculates the required timing to do the following:
  - Generate the SCL clock when configured as a master
  - Check for bus idle
  - Generate a START and a STOP
  - Setup the data and hold the data
- **Rx Shift** — Takes data into the design and extracts it in byte format.
- **Tx Shift** — Presents data supplied by CPU for transfer on the I2C bus.
- **Rx Filter** — Detects the events in the bus; for example, start, stop and arbitration lost.
- **Toggle** — Generates pulses on both sides and toggles to transfer signals across clock domains.
- **Synchronizer** — Transfers signals from one clock domain to another.
- **DMA Interface** — Generates the handshaking signals to the central DMA controller in order to automate the data transfer without CPU intervention.
- **Interrupt Controller** — Generates the raw interrupt and interrupt flags, allowing them to be set and cleared.
- **RX FIFO/TX FIFO** — Holds the RX FIFO and TX FIFO register banks and controllers, along with their status levels.

4.3.4. I2C Terminology

The following terms are used and are defined as follows:

4.3.4.1. I2C Bus Terms

The following terms relate to how the role of the I2C device and how it interacts with other I2C devices on the bus.

- **Transmitter** – the device that sends data to the bus. A transmitter can either be a device that initiates the data transmission to the bus (a master-transmitter) or responds to a request from the master to send data to the bus (a slave-transmitter).
- **Receiver** – the device that receives data from the bus. A receiver can either be a device that receives data on its own request (a master-receiver) or in response to a request from the master (a slave-receiver).
- **Master** – the component that initializes a transfer (START command), generates the clock SCL signal and terminates the transfer (STOP command). A master can be either a transmitter or a receiver.
- **Slave** – the device addressed by the master. A slave can be either receiver or transmitter.
- **Multi-master** – the ability for more than one master to co-exist on the bus at the same time without collision or data loss.
- **Arbitration** – the predefined procedure that authorizes only one master at a time to take control of the bus. For more information about this behaviour, refer to Section 4.3.8.
- **Synchronization** – the predefined procedure that synchronizes the clock signals provided by two or more masters. For more information about this feature, refer to Section 4.3.9.
- SDA – data signal line (Serial Data)
- SCL – clock signal line (Serial Clock)

4.3.4.2. Bus Transfer Terms

The following terms are specific to data transfers that occur to/from the I2C bus.

- **START (RESTART)** – data transfer begins with a START or RESTART condition. The level of the SDA data line changes from high to low, while the SCL clock line remains high. When this occurs, the bus becomes busy.

NOTE

START and RESTART conditions are functionally identical.

- **STOP** – data transfer is terminated by a STOP condition. This occurs when the level on the SDA data line passes from the low state to the high state, while the SCL clock line remains high. When the data transfer has been terminated, the bus is free or idle once again. The bus stays busy if a RESTART is generated instead of a STOP condition.

4.3.5. I2C Behaviour

The DW_apb_i2c can be controlled via software to be either:

- An I2C master only, communicating with other I2C slaves; OR
- An I2C slave only, communicating with one or more I2C masters.

The master is responsible for generating the clock and controlling the transfer of data. The slave is responsible for either transmitting or receiving data to/from the master. The acknowledgement of data is sent by the device that is receiving data, which can be either a master or a slave. As mentioned previously, the I2C protocol also allows multiple masters to reside on the I2C bus and uses an arbitration procedure to determine bus ownership.

Each slave has a unique address that is determined by the system designer. When a master wants to communicate with a slave, the master transmits a START/RESTART condition that is then followed by the slave's address and a control bit (R/W) to determine if the master wants to transmit data or receive data from the slave. The slave then sends an acknowledge (ACK) pulse after the address.

If the master (master-transmitter) is writing to the slave (slave-receiver), the receiver gets one byte of data. This transaction continues until the master terminates the transmission with a STOP condition. If the master is reading from a slave (master-receiver), the slave transmits (slave-transmitter) a byte of data to the master, and the master then acknowledges the transaction with the ACK pulse. This transaction continues until the master terminates the transmission by not acknowledging (NACK) the transaction after the last byte is received, and then the master issues a STOP condition or addresses another slave after issuing a RESTART condition. This behaviour is illustrated in Figure 65.

Figure 65. Data transfer on the I2C Bus

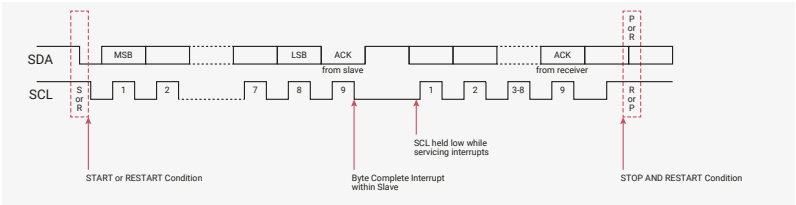

The DW_apb_i2c is a synchronous serial interface. The SDA line is a bidirectional signal and changes only while the SCL line is low, except for STOP, START, and RESTART conditions. The output drivers are open-drain or open-collector to perform wire-AND functions on the bus. The maximum number of devices on the bus is limited by only the maximum capacitance specification of 400 pF. Data is transmitted in byte packages.

The I2C protocols implemented in DW_apb_i2c are described in more details in Section 4.3.6.

4.3.5.1. START and STOP Generation

When operating as an I2C master, putting data into the transmit FIFO causes the DW_apb_i2c to generate a START condition on the I2C bus. Writing a 1 to IC_DATA_CMD.STOP causes the DW_apb_i2c to generate a STOP condition on

the I2C bus; a STOP condition is not issued if this bit is not set, even if the transmit FIFO is empty.

When operating as a slave, the DW_apb_i2c does not generate START and STOP conditions, as per the protocol. However, if a read request is made to the DW_apb_i2c, it holds the SCL line low until read data has been supplied to it. This stalls the I2C bus until read data is provided to the slave DW_apb_i2c, or the DW_apb_i2c slave is disabled by writing a 0 to IC_ENABLE.ENABLE.

4.3.5.2. Combined Formats

The DW_apb_i2c supports mixed read and write combined format transactions in both 7-bit and 10-bit addressing modes. The DW_apb_i2c does not support mixed address and mixed address format—that is, a 7-bit address transaction followed by a 10-bit address transaction or vice versa—combined format transactions. To initiate combined format transfers, IC_CON.IC_RESTART_EN should be set to 1. With this value set and operating as a master, when the DW_apb_i2c completes an I2C transfer, it checks the transmit FIFO and executes the next transfer. If the direction of this transfer differs from the previous transfer, the combined format is used to issue the transfer. If the transmit FIFO is empty when the current I2C transfer completes:

- IC_DATA_CMD.STOP is checked and:
  - If set to 1, a STOP bit is issued.
  - If set to 0, the SCL is held low until the next command is written to the transmit FIFO.

For more details, refer to Section 4.3.7.

4.3.6. I2C Protocols

The DW_apb_i2c has the protocols discussed in this section.

4.3.6.1. START and STOP Conditions

When the bus is idle, both the SCL and SDA signals are pulled high through external pull-up resistors on the bus. When the master wants to start a transmission on the bus, the master issues a START condition. This is defined to be a high-to-low transition of the SDA signal while SCL is 1. When the master wants to terminate the transmission, the master issues a STOP condition. This is defined to be a low-to-high transition of the SDA line while SCL is 1. Figure 66 shows the timing of the START and STOP conditions. When data is being transmitted on the bus, the SDA line must be stable when SCL is 1.

Figure 66. I2C START and STOP Condition

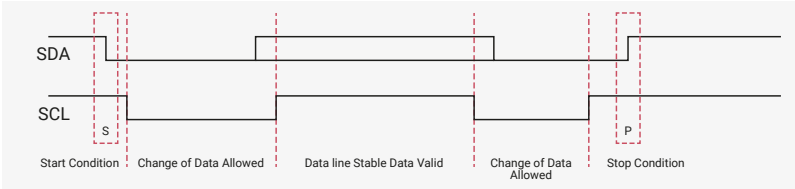

NOTE

The signal transitions for the START/STOP conditions, as depicted in Figure 66, reflect those observed at the output signals of the Master driving the I2C bus. Care should be taken when observing the SDA/SCL signals at the input signals of the Slave(s), because unequal line delays may result in an incorrect SDA/SCL timing relationship.

4.3.6.2. Addressing Slave Protocol

There are two address formats: the 7-bit address format and the 10-bit address format.

4.3.6.2.1. 7-bit Address Format

During the 7-bit address format, the first seven bits (bits 7:1) of the first byte set the slave address and the LSB bit (bit 0) is the R/W bit as shown in Figure 67. When bit 0 (R/W) is set to 0, the master writes to the slave. When bit 0 (R/W) is set to 1, the master reads from the slave.

Figure 67. I2C 7-bit Address Format

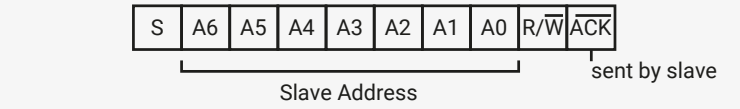

S = START Condition $\overline{ACK}$ = Acknowledge R/$\overline{W}$ = Read/Write Pulse

4.3.6.2.2. 10-bit Address Format

During 10-bit addressing, two bytes are transferred to set the 10-bit address. The transfer of the first byte contains the following bit definition. The first five bits (bits 7:3) notify the slaves that this is a 10-bit transfer followed by the next two bits (bits 2:1), which set the slaves address bits 9:8, and the LSB bit (bit 0) is the R/W bit. The second byte transferred sets bits 7:0 of the slave address. Figure 68 shows the 10-bit address format.

Figure 68. 10-bit Address Format

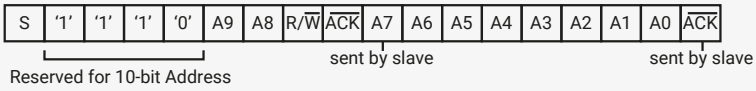

S = START Condition $\overline{ACK}$ = Acknowledge R/$\overline{W}$ = Read/Write Pulse

This table defines the special purpose and reserved first byte addresses.

Table 448. I2C/SMBus Definition of Bits in First Byte

Slave Address	R/W Bit	Description
0000 000	0	General Call Address. DW_apb_i2c places the data in the receive buffer and issues a General Call interrupt.
0000 000	1	START byte. For more details, refer to Section 4.3.6.4.
0000 001	X	CBUS address. DW_apb_i2c ignores these accesses.
0000 010	X	Reserved.
0000 011	X	Reserved.
0000 1XX	X	High-speed master code (for more information, refer to Section 4.3.8).
1111 1XX	X	Reserved.
1111 0XX	X	10-bit slave addressing.
0001 000	X	SMbus Host (not supported)
0001 100	X	SMBus Alert Response Address (not supported)
1100 001	X	SMBus Device Default Address (not supported)

DW_apb_i2c does not restrict you from using these reserved addresses. However, if you use these reserved addresses,

you may run into incompatibilities with other I2C components.

4.3.6.3. Transmitting and Receiving Protocol

The master can initiate data transmission and reception to/from the bus, acting as either a master-transmitter or master-receiver. A slave responds to requests from the master to either transmit data or receive data to/from the bus, acting as either a slave-transmitter or slave-receiver, respectively.

4.3.6.3.1. Master-Transmitter and Slave-Receiver

All data is transmitted in byte format, with no limit on the number of bytes transferred per data transfer. After the master sends the address and R/W bit or the master transmits a byte of data to the slave, the slave-receiver must respond with the acknowledge signal (ACK). When a slave-receiver does not respond with an ACK pulse, the master aborts the transfer by issuing a STOP condition. The slave must leave the SDA line high so that the master can abort the transfer. If the master-transmitter is transmitting data as shown in Figure 69, then the slave-receiver responds to the master-transmitter with an acknowledge pulse after every byte of data is received.

Figure 69. I2C Master-Transmitter Protocol

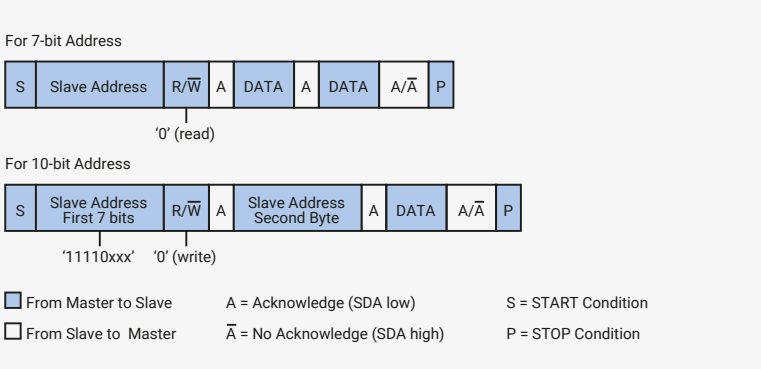

4.3.6.3.2. Master-Receiver and Slave-Transmitter

If the master is receiving data as shown in Figure 70, then the master responds to the slave-transmitter with an acknowledge pulse after a byte of data has been received, except for the last byte. This is the way the master-receiver notifies the slave-transmitter that this is the last byte. The slave-transmitter relinquishes the SDA line after detecting the No Acknowledge (NACK) so that the master can issue a STOP condition.

Figure 70. I2C Master-Receiver Protocol

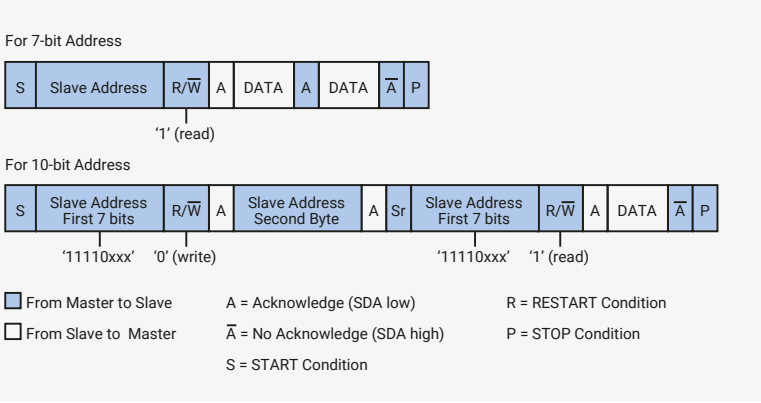

When a master does not want to relinquish the bus with a STOP condition, the master can issue a RESTART condition. This is identical to a START condition except it occurs after the ACK pulse. Operating in master mode, the DW_apb_i2c can then communicate with the same slave using a transfer of a different direction. For a description of the combined format transactions that the DW_apb_i2c supports, refer to Section 4.3.5.2.

NOTE

The DW_apb_i2c must be completely disabled before the target slave address register (IC_TAR) can be reprogrammed.

4.3.6.4. START BYTE Transfer Protocol

The START BYTE transfer protocol is set up for systems that do not have an on-board dedicated I2C hardware module. When the DW_apb_i2c is addressed as a slave, it always samples the I2C bus at the highest speed supported so that it never requires a START BYTE transfer. However, when DW_apb_i2c is a master, it supports the generation of START BYTE transfers at the beginning of every transfer in case a slave device requires it.

This protocol consists of seven zeros being transmitted followed by a one, as illustrated in Figure 71. This allows the processor that is polling the bus to under-sample the address phase until zero is detected. Once the microcontroller detects a zero, it switches from the under sampling rate to the correct rate of the master.

Figure 71. I2C Start Byte Transfer

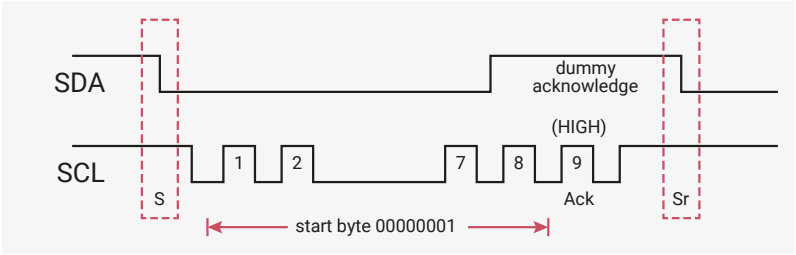

The START BYTE procedure is as follows:

1. Master generates a START condition.
2. Master transmits the START byte (0000 0001).
3. Master transmits the ACK clock pulse. (Present only to conform with the byte handling format used on the bus)
4. No slave sets the ACK signal to zero.
5. Master generates a RESTART (R) condition.

A hardware receiver does not respond to the START BYTE because it is a reserved address and resets after the RESTART condition is generated.

4.3.7. Tx FIFO Management and START, STOP and RESTART Generation

When operating as a master, the DW_apb_i2c component supports the mode of Tx FIFO management illustrated in Figure 72

4.3.7.1. Tx FIFO Management

The component does not generate a STOP if the Tx FIFO becomes empty; in this situation the component holds the SCL line low, stalling the bus until a new entry is available in the Tx FIFO. A STOP condition is generated only when the user specifically requests it by setting bit nine (Stop bit) of the command written to IC_DATA_CMD register. Figure 72 shows the bits in the IC_DATA_CMD register.

Figure 72. IC_DATA_CMD Register

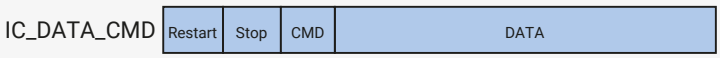

Data	Read/Write field; data retrieved from slave is read from this field; data to be sent to slave is written to this field
CMD	Write-only field; this bit determines whether transfer to be carried out is Read (CMD=1) or Write (CMD=0)
Stop	Write-only field; this bit determines whether STOP is generated after data byte is sent or received
Restart	Write-only field; this bit determines whether RESTART (or STOP followed by START in case or restart capability is not enabled) is generated before data is sent or received

Figure 73 illustrates the behaviour of the DW_apb_i2c when the Tx FIFO becomes empty while operating as a master transmitter, as well as showing the generation of a STOP condition.

Figure 73. Master Transmitter - Tx FIFO Empties/STOP Generation

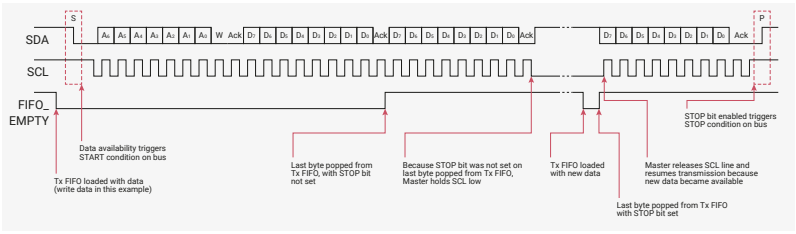

Figure 74 illustrates the behaviour of the DW_apb_i2c when the Tx FIFO becomes empty while operating as a master receiver, as well as showing the generation of a STOP condition.

Figure 74. Master Receiver - Tx FIFO Empties/STOP Generation

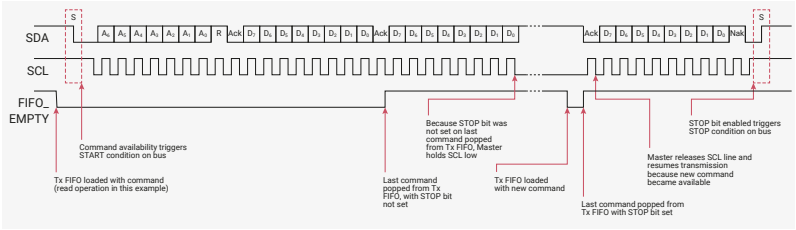

Figure 75 and Figure 76 illustrate configurations where the user can control the generation of RESTART conditions on the I2C bus. If bit 10 (Restart) of the IC_DATA_CMD register is set and the restart capability is enabled (IC_RESTART_EN=1), a RESTART is generated before the data byte is written to or read from the slave. If the restart capability is not enabled a STOP followed by a START is generated in place of the RESTART. Figure 75 illustrates this situation during operation as a master transmitter.

Figure 75. Master Transmitter — Restart Bit of IC_DATA_CMD Is Set

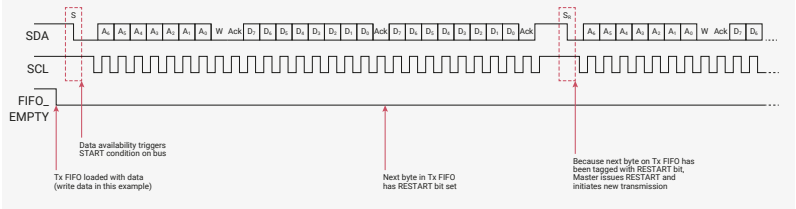

Figure 76 illustrates the same situation, but during operation as a master receiver.

Figure 76. Master Receiver — Restart Bit of IC_DATA_CMD Is Set

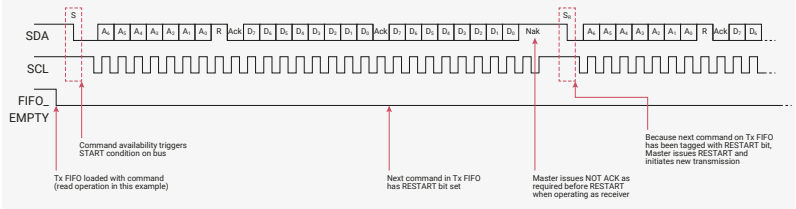

Figure 77 illustrates operation as a master transmitter where the Stop bit of the IC_DATA_CMD register is set and the Tx FIFO is not empty

Figure 77. Master Transmitter — Stop Bit of IC_DATA_CMD Set/Tx FIFO Not Empty

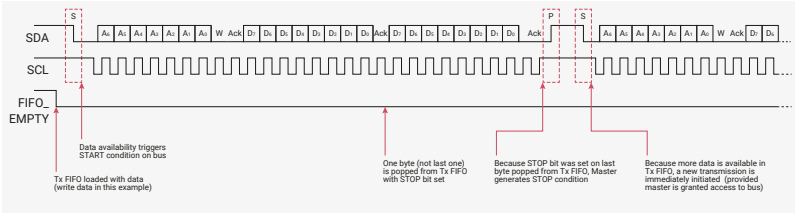

Figure 78 illustrates operation as a master transmitter where the first byte loaded into the Tx FIFO is allowed to go empty with the Restart bit set

Figure 78. Master Transmitter — First Byte Loaded Into Tx FIFO Allowed to Empty, Restart Bit Set

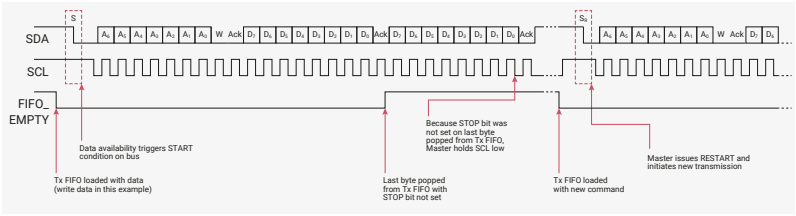

Figure 79 illustrates operation as a master receiver where the Stop bit of the IC_DATA_CMD register is set and the Tx FIFO is not empty

Figure 79. Master Receiver — Stop Bit of IC_DATA_CMD Set/Tx FIFO Not Empty

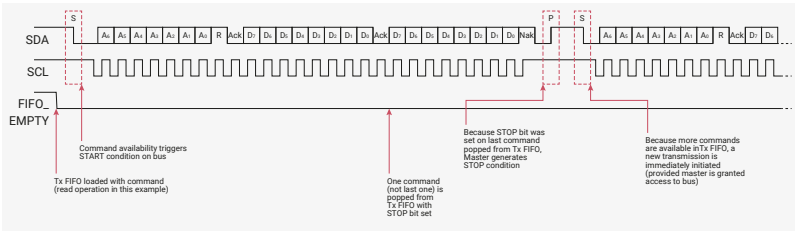

Figure 80 illustrates operation as a master receiver where the first command loaded after the Tx FIFO is allowed to empty and the Restart bit is set

Figure 80. Master Receiver — First Command Loaded After Tx FIFO Allowed to Empty/Restart Bit Set

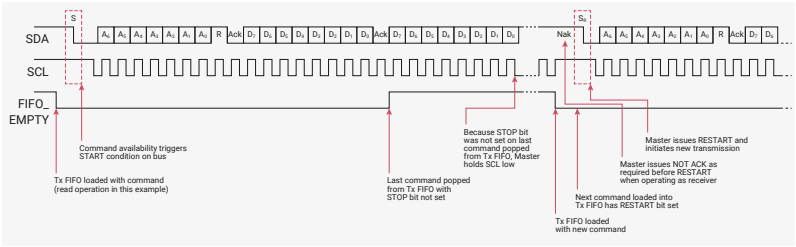

4.3.8. Multiple Master Arbitration

The DW_apb_i2c bus protocol allows multiple masters to reside on the same bus. If there are two masters on the same I2C-bus, there is an arbitration procedure if both try to take control of the bus at the same time by generating a START condition at the same time. Once a master (for example, a microcontroller) has control of the bus, no other master can take control until the first master sends a STOP condition and places the bus in an idle state.

Arbitration takes place on the SDA line, while the SCL line is one. The master, which transmits a one while the other master transmits zero, loses arbitration and turns off its data output stage. The master that lost arbitration can continue to generate clocks until the end of the byte transfer. If both masters are addressing the same slave device, the arbitration could go into the data phase.

Upon detecting that it has lost arbitration to another master, the DW_apb_i2c will stop generating SCL (will disable the output driver). Figure 81 illustrates the timing of when two masters are arbitrating on the bus.

Figure 81. Multiple Master Arbitration

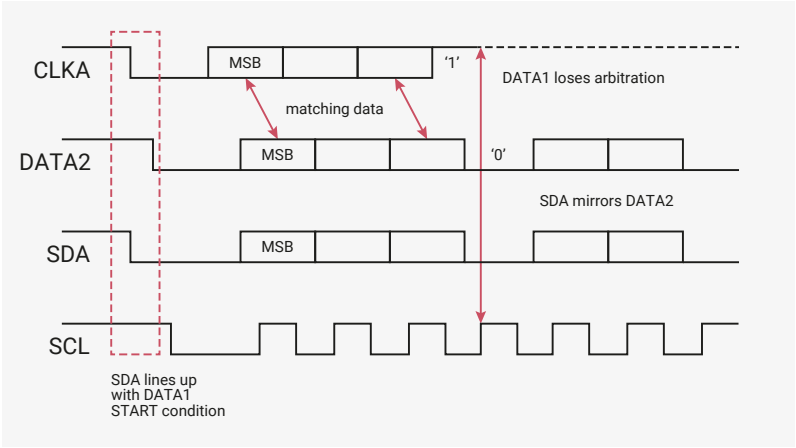

Control of the bus is determined by address or master code and data sent by competing masters, so there is no central master nor any order of priority on the bus.

Arbitration is not allowed between the following conditions:

- A RESTART condition and a data bit
- A STOP condition and a data bit
- A RESTART condition and a STOP condition

NOTE

Slaves are not involved in the arbitration process.

4.3.9. Clock Synchronization

When two or more masters try to transfer information on the bus at the same time, they must arbitrate and synchronize the SCL clock. All masters generate their own clock to transfer messages. Data is valid only during the high period of SCL clock. Clock synchronization is performed using the wired-AND connection to the SCL signal. When the master transitions the SCL clock to zero, the master starts counting the low time of the SCL clock and transitions the SCL clock signal to one at the beginning of the next clock period. However, if another master is holding the SCL line to 0, then the master goes into a HIGH wait state until the SCL clock line transitions to one.

All masters then count off their high time, and the master with the shortest high time transitions the SCL line to zero. The masters then count out their low time and the one with the longest low time forces the other masters into a HIGH wait state. Therefore, a synchronized SCL clock is generated, which is illustrated in Figure 82. Optionally, slaves may hold the SCL line low to slow down the timing on the I2C bus.

Figure 82. Multi-Master Clock Synchronization

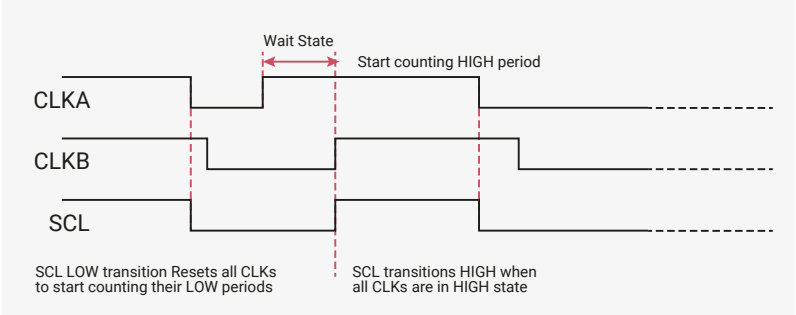

4.3.10. Operation Modes

This section provides information on operation modes.

NOTE

It is important to note that the DW_apb_i2c should only be set to operate as an I2C Master, or I2C Slave, but not both simultaneously. This is achieved by ensuring that IC_CON.IC_SLAVE_DISABLE and IC_CON.MASTER_MODE are never set to zero and one, respectively.

4.3.10.1. Slave Mode Operation

This section discusses slave mode procedures.

4.3.10.1.1. Initial Configuration

To use the DW_apb_i2c as a slave, perform the following steps:

1. Disable the DW_apb_i2c by writing a '0' to IC_ENABLE.ENABLE.
2. Write to the IC_SAR register (bits 9:0) to set the slave address. This is the address to which the DW_apb_i2c responds.
3. Write to the IC_CON register to specify which type of addressing is supported (7-bit or 10-bit by setting bit 3). Enable the DW_apb_i2c in slave-only mode by writing a '0' into bit six (IC_SLAVE_DISABLE) and a '0' to bit zero (MASTER_MODE).

NOTE

Slaves and masters do not have to be programmed with the same type of addressing 7-bit or 10-bit address. For instance, a slave can be programmed with 7-bit addressing and a master with 10-bit addressing, and vice versa.

1. Enable the DW_apb_i2c by writing a '1' to IC_ENABLE.ENABLE.

NOTE

Depending on the reset values chosen, steps two and three may not be necessary because the reset values can be configured. For instance, if the device is only going to be a master, there would be no need to set the slave address because you can configure DW_apb_i2c to have the slave disabled after reset and to enable the master after reset. The values stored are static and do not need to be reprogrammed if the DW_apb_i2c is disabled.

WARNING

It is recommended that the DW_apb_i2c Slave be brought out of reset only when the I2C bus is IDLE. De-asserting the reset when a transfer is ongoing on the bus causes internal synchronization flip-flops used to synchronize SDA and SCL to toggle from a reset value of one to the actual value on the bus. This can result in SDA toggling from one to zero while SCL is one, thereby causing a false START condition to be detected by the DW_apb_i2c Slave. This scenario can also be avoided by configuring the DW_apb_i2c with IC_SLAVE_DISABLE = 1 and MASTER_MODE = 1 so that the Slave interface is disabled after reset. It can then be enabled by programming IC_CON[0] = 0 and IC_CON[6] = 0 after the internal SDA and SCL have synchronized to the value on the bus; this takes approximately six ic_clk cycles after reset de-assertion.

4.3.10.1.2. Slave-Transmitter Operation for a Single Byte

When another I2C master device on the bus addresses the DW_apb_i2c and requests data, the DW_apb_i2c acts as a slave-transmitter and the following steps occur:

1. The other I2C master device initiates an I2C transfer with an address that matches the slave address in the IC_SAR register of the DW_apb_i2c.
2. The DW_apb_i2c acknowledges the sent address and recognizes the direction of the transfer to indicate that it is acting as a slave-transmitter.
3. The DW_apb_i2c asserts the RD_REQ interrupt (bit five of the IC_RAW_INTR_STAT register) and holds the SCL line low. It is in a wait state until software responds. If the RD_REQ interrupt has been masked, due to IC_INTR_MASK.M_RD_REQ being set to zero, then it is recommended that a hardware and/or software timing routine be used to instruct the CPU to perform periodic reads of the IC_RAW_INTR_STAT register.
    a. Reads that indicate IC_RAW_INTR_STAT.RD_REQ being set to one must be treated as the equivalent of the RD_REQ interrupt being asserted.
    b. Software must then act to satisfy the I2C transfer.
    c. The timing interval used should be in the order of 10 times the fastest SCL clock period the DW_apb_i2c can handle. For example, for 400kbps, the timing interval is 25µs.

NOTE

The value of 10 is recommended here because this is approximately the amount of time required for a single byte of data transferred on the I2C bus.

1. If there is any data remaining in the Tx FIFO before receiving the read request, then the DW_apb_i2c asserts a TX_ABRT interrupt (bit six of the IC_RAW_INTR_STAT register) to flush the old data from the TX FIFO. If the TX_ABRT interrupt has been masked, due to IC_INTR_MASK.M_TX_ABRT being set to zero, then it is recommended that re-using the timing routine (described in the previous step), or a similar one, be used to read the IC_RAW_INTR_STAT register.

NOTE

Because the DW_apb_i2c's Tx FIFO is forced into a flushed/reset state whenever a TX_ABRT event occurs, it is necessary for software to release the DW_apb_i2c from this state by reading the IC_CLR_TX_ABRT register before attempting to write into the Tx FIFO. See register IC_RAW_INTR_STAT for more details.

a. Reads that indicate bit six (R_TX_ABRT) being set to one must be treated as the equivalent of the TX_ABRT interrupt being asserted.
b. There is no further action required from software.
c. The timing interval used should be similar to that described in the previous step for the IC_RAW_INTR_STAT.RD_REQ register.
    1. Software writes to the IC_DATA_CMD register with the data to be written (by writing a '0' in bit 8).
    2. Software must clear the RD_REQ and TX_ABRT interrupts (bits five and six, respectively) of the IC_RAW_INTR_STAT register before proceeding. If the RD_REQ and/or TX_ABRT interrupts have been masked, then clearing of the IC_RAW_INTR_STAT register will have already been performed when either the R_RD_REQ or R_TX_ABRT bit has been read as one.
    3. The DW_apb_i2c releases the SCL and transmits the byte.
    4. The master may hold the I2C bus by issuing a RESTART condition or release the bus by issuing a STOP condition.

NOTE

Slave-Transmitter Operation for a Single Byte is not applicable in Ultra-Fast Mode as Read transfers are not supported.

4.3.10.1.3. Slave-Receiver Operation for a Single Byte

When another I2C master device on the bus addresses the DW_apb_i2c and is sending data, the DW_apb_i2c acts as a slave-receiver and the following steps occur:

1. The other I2C master device initiates an I2C transfer with an address that matches the DW_apb_i2c's slave address in the IC_SAR register.
2. The DW_apb_i2c acknowledges the sent address and recognizes the direction of the transfer to indicate that the DW_apb_i2c is acting as a slave-receiver.
3. DW_apb_i2c receives the transmitted byte and places it in the receive buffer.

NOTE

If the Rx FIFO is completely filled with data when a byte is pushed, then the DW_apb_i2c slave holds the I2C SCL line low until the Rx FIFO has some space, and then continues with the next read request.

1. DW_apb_i2c asserts the RX_FULL interrupt IC_RAW_INTR_STAT.RX_FULL. If the RX_FULL interrupt has been masked, due to setting IC_INTR_MASK.M_RX_FULL register to zero or setting IC_TX_TL to a value larger than zero, then it is recommended that a timing routine (described in Section 4.3.10.1.2) be implemented for periodic reads of the IC_STATUS register. Reads of the IC_STATUS register, with bit 3 (RFNE) set at one, must then be treated by software as the equivalent of the RX_FULL interrupt being asserted.
2. Software may read the byte from the IC_DATA_CMD register (bits 7:0).
3. The other master device may hold the I2C bus by issuing a RESTART condition, or release the bus by issuing a STOP condition.

4.3.10.1.4. Slave-Transfer Operation For Bulk Transfers

In the standard I2C protocol, all transactions are single byte transactions and the programmer responds to a remote master read request by writing one byte into the slave's TX FIFO. When a slave (slave-transmitter) is issued with a read request (RD_REQ) from the remote master (master-receiver), at a minimum there should be at least one entry placed into the slave-transmitter's TX FIFO. DW_apb_i2c is designed to handle more data in the TX FIFO so that subsequent read requests can take that data without raising an interrupt to get more data. Ultimately, this eliminates the possibility of significant latencies being incurred between raising the interrupt for data each time had there been a restriction of having only one entry placed in the TX FIFO. This mode only occurs when DW_apb_i2c is acting as a slave-transmitter. If the remote master acknowledges the data sent by the slave-transmitter and there is no data in the slave's TX FIFO, the DW_apb_i2c holds the I2C SCL line low while it raises the read request interrupt (RD_REQ) and waits for data to be written into the TX FIFO before it can be sent to the remote master.

If the RD_REQ interrupt is masked, due to IC_INTR_STAT.R_RD_REQ set to zero, then it is recommended that a timing routine be used to activate periodic reads of the IC_RAW_INTR_STAT register. Reads of IC_RAW_INTR_STAT that return bit five (RD_REQ) set to one must be treated as the equivalent of the RD_REQ interrupt referred to in this section. This timing routine is similar to that described in Section 4.3.10.1.2.

The RD_REQ interrupt is raised upon a read request, and like interrupts, must be cleared when exiting the interrupt service handling routine (ISR). The ISR allows you to either write one byte or more than one byte into the Tx FIFO. During the transmission of these bytes to the master, if the master acknowledges the last byte, then the slave must raise the RD_REQ again because the master is requesting for more data. If the programmer knows in advance that the remote master is requesting a packet of 'n' bytes, then when another master addresses DW_apb_i2c and requests data, the Tx FIFO could be written with 'n' bytes and the remote master receives it as a continuous stream of data. For example, the

DW_apb_i2c slave continues to send data to the remote master as long as the remote master is acknowledging the data sent and there is data available in the Tx FIFO. There is no need to hold the SCL line low or to issue RD_REQ again.

If the remote master is to receive 'n' bytes from the DW_apb_i2c but the programmer wrote a number of bytes larger than 'n' to the Tx FIFO, then when the slave finishes sending the requested 'n' bytes, it clears the Tx FIFO and ignores any excess bytes.

The DW_apb_i2c generates a transmit abort (TX_ABRT) event to indicate the clearing of the Tx FIFO in this example. At the time an ACK/NACK is expected, if a NACK is received, then the remote master has all the data it wants. At this time, a flag is raised within the slave's state machine to clear the leftover data in the Tx FIFO. This flag is transferred to the processor bus clock domain where the FIFO exists and the contents of the Tx FIFO is cleared at that time.

4.3.10.2. Master Mode Operation

This section discusses master mode procedures.

4.3.10.2.1. Initial Configuration

To use the DW_apb_i2c as a master perform the following steps:

1. Disable the DW_apb_i2c by writing zero to IC_ENABLE.ENABLE.
2. Write to the IC_CON register to set the maximum speed mode supported (bits 2:1) and the desired speed of the DW_apb_i2c master-initiated transfers, either 7-bit or 10-bit addressing (bit 4). Ensure that bit six (IC_SLAVE_DISABLE) is written with a '1' and bit zero (MASTER_MODE) is written with a '1'.

Note: Slaves and masters do not have to be programmed with the same type of 7-bit or 10-bit address. For instance, a slave can be programmed with 7-bit addressing and a master with 10-bit addressing, and vice versa.

1. Write to the IC_TAR register the address of the I2C device to be addressed (bits 9:0). This register also indicates whether a General Call or a START BYTE command is going to be performed by I2C.
2. Enable the DW_apb_i2c by writing a one to IC_ENABLE.ENABLE.
3. Now write transfer direction and data to be sent to the IC_DATA_CMD register. If the IC_DATA_CMD register is written before the DW_apb_i2c is enabled, the data and commands are lost as the buffers are kept cleared when DW_apb_i2c is disabled. This step generates the START condition and the address byte on the DW_apb_i2c. Once DW_apb_i2c is enabled and there is data in the TX FIFO, DW_apb_i2c starts reading the data.

NOTE

Depending on the reset values chosen, steps two, three, four, and five may not be necessary because the reset values can be configured. The values stored are static and do not need to be reprogrammed if the DW_apb_i2c is disabled, with the exception of the transfer direction and data.

4.3.10.2.2. Master Transmit and Master Receive

The DW_apb_i2c supports switching back and forth between reading and writing dynamically. To transmit data, write the data to be written to the lower byte of the I2C Rx/Tx Data Buffer and Command Register (IC_DATA_CMD). The CMD bit [8] should be written to zero for I2C write operations. Subsequently, a read command may be issued by writing "don't cares" to the lower byte of the IC_DATA_CMD register, and a one should be written to the CMD bit. The DW_apb_i2c master continues to initiate transfers as long as there are commands present in the transmit FIFO. If the transmit FIFO becomes empty the master either inserts a STOP condition after completing the current transfers.

- If set to one, it issues a STOP condition after completing the current transfer.
- If set to zero, it holds SCL low until next command is written to the transmit FIFO.

For more details, refer to Section 4.3.7.

4.3.10.3. Disabling DW_apb_i2c

The register IC_ENABLE_STATUS is added to allow software to unambiguously determine when the hardware has completely shutdown in response to IC_ENABLE.ENABLE being set from one to zero.

Only one register is required to be monitored, as opposed to monitoring two registers (IC_STATUS and IC_RAW_INTR_STAT) which was a requirement for earlier versions of DW_apb_i2c.

NOTE

The DW_apb_i2c Master can be disabled only if the current command being processed—when the ic_enable de-assertion occurs—has the STOP bit set to one. When an attempt is made to disable the DW_apb_i2c Master while processing a command without the STOP bit set, the DW_apb_i2c Master continues to remain active, holding the SCL line low until a new command is received in the Tx FIFO. When the DW_apb_i2c Master is processing a command without the STOP bit set, you can issue the ABORT (IC_ENABLE.ABORT) to relinquish the I2C bus and then disable DW_apb_i2c.

4.3.10.3.1. Procedure

1. Define a timer interval (t_{i2c_poll}) equal to the 10 times the signalling period for the highest I2C transfer speed used in the system and supported by DW_apb_i2c. For example, if the highest I2C transfer mode is 400kbps, then this t_{i2c_poll} is 25µs.
2. Define a maximum time-out parameter, MAX_T_POLL_COUNT, such that if any repeated polling operation exceeds this maximum value, an error is reported.
3. Execute a blocking thread/process/function that prevents any further I2C master transactions to be started by software, but allows any pending transfers to be completed.

NOTE

This step can be ignored if DW_apb_i2c is programmed to operate as an I2C slave only.

1. The variable POLL_COUNT is initialized to zero.
2. Set bit zero of the IC_ENABLE register to zero.
3. Read the IC_ENABLE_STATUS register and test the IC_EN bit (bit 0). Increment POLL_COUNT by one. If POLL_COUNT >= MAX_T_POLL_COUNT, exit with the relevant error code.
4. If IC_ENABLE_STATUS[0] is one, then sleep for t_{i2c_poll} and proceed to the previous step. Otherwise, exit with a relevant success code.

4.3.10.4. Aborting I2C Transfers

The ABORT control bit of the IC_ENABLE register allows the software to relinquish the I2C bus before completing the issued transfer commands from the Tx FIFO. In response to an ABORT request, the controller issues the STOP condition over the I2C bus, followed by Tx FIFO flush. Aborting the transfer is allowed only in master mode of operation.

4.3.10.4.1. Procedure

1. Stop filling the Tx FIFO (IC_DATA_CMD) with new commands.
2. When operating in DMA mode, disable the transmit DMA by setting TDMAE to zero.
3. Set IC_ENABLE.ABORT to one.
4. Wait for the M_TX_ABRT interrupt.

5. Read the IC_TX_ABRT_SOURCE register to identify the source as ABRT_USER_ABRT.

4.3.11. Spike Suppression

The DW_apb_i2c contains programmable spike suppression logic that match requirements imposed by the I2C Bus Specification for SS/FS modes. This logic is based on counters that monitor the input signals (SCL and SDA), checking if they remain stable for a predetermined amount of ic_clk cycles before they are sampled internally. There is one separate counter for each signal (SCL and SDA). The number of ic_clk cycles can be programmed by the user and should be calculated taking into account the frequency of ic_clk and the relevant spike length specification. Each counter is started whenever its input signal changes its value. Depending on the behaviour of the input signal, one of the following scenarios occurs:

- The input signal remains unchanged until the counter reaches its count limit value. When this happens, the internal version of the signal is updated with the input value, and the counter is reset and stopped. The counter is not restarted until a new change on the input signal is detected.
- The input signal changes again before the counter reaches its count limit value. When this happens, the counter is reset and stopped, but the internal version of the signal is not updated. The counter remains stopped until a new change on the input signal is detected.

The timing diagram in Figure 83 illustrates the behaviour described above.

Figure 83. Spike Suppression Example

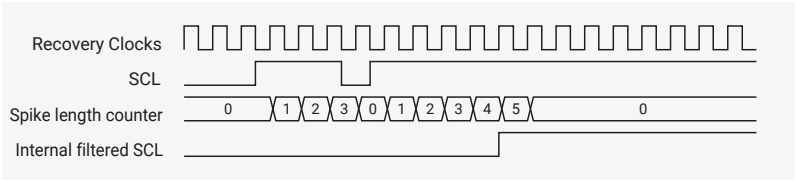

NOTE

There is a 2-stage synchronizer on the SCL input, but for the sake of simplicity this synchronization delay was not included in the timing diagram in Figure 83.

The I2C Bus Specification calls for different maximum spike lengths according to the operating mode — 50ns for SS and FS, so this register is required to store the values needed:

- Register IC_FS_SPKLEN holds the maximum spike length for SS and FS modes

This register is 8 bits wide and accessible through the APB interface for read and write purposes; however, they can be written to only when the DW_apb_i2c is disabled. The minimum value that can be programmed into these registers is one; attempting to program a value smaller than one results in the value one being written.

The default value for these registers is based on the value of 100ns for ic_clk period, so should be updated for the clk_sys period in use on RP2040.

NOTE

- Because the minimum value that can be programmed into the IC_FS_SPKLEN register is one, the spike length specification can be exceeded for low frequencies of `ic_clk`. Consider the simple example of a 10MHz (100ns period) `ic_clk`; in this case, the minimum spike length that can be programmed is 100ns, which means that spikes up to this length are suppressed.
- Standard synchronization logic (two flip-flops in series) is implemented upstream of the spike suppression logic and is not affected in any way by the contents of the spike length registers or the operation of the spike suppression logic; the two operations (synchronization and spike suppression) are completely independent. Because the `SCL` and `SDA` inputs are asynchronous to `ic_clk`, there is one `ic_clk` cycle uncertainty in the sampling of these signals; that is, depending on when they occur relative to the rising edge of `ic_clk`, spikes of the same original length might show a difference of one `ic_clk` cycle after being sampled.
- Spike suppression is symmetrical; that is, the behaviour is exactly the same for transitions from zero to one and from one to zero.

4.3.12. Fast Mode Plus Operation

In fast mode plus, the DW_apb_i2c allows the fast mode operation to be extended to support speeds up to 1000kbps. To enable the DW_apb_i2c for fast mode plus operation, perform the following steps before initiating any data transfer:

1. Set `ic_clk` frequency greater than or equal to 32MHz (refer to Section 4.3.14.2.1).
2. Program the IC_CON register [2:1] = 2'b10 for fast mode or fast mode plus.
3. Program IC_FS_SCL_LCNT and IC_FS_SCL_HCNT registers to meet the fast mode plus `SCL` (refer to Section 4.3.14).
4. Program the IC_FS_SPKLEN register to suppress the maximum spike of 50ns.
5. Program the IC_SDA_SETUP register to meet the minimum data setup time (tSU; DAT).

4.3.13. Bus Clear Feature

DW_apb_i2c supports the bus clear feature that provides graceful recovery of data `SDA` and clock `SCL` lines during unlikely events in which either the clock or data line is stuck at LOW.

4.3.13.1. `SDA` Line Stuck at LOW Recovery

In case of `SDA` line stuck at LOW, the master performs the following actions to recover as shown in Figure 84 and Figure 85:

1. Master sends a maximum of nine clock pulses to recover the bus LOW within those nine clocks.
    - The number of clock pulses will vary with the number of bits that remain to be sent by the slave. As the maximum number of bits is nine, master sends up to nine clock pluses and allows the slave to recover it.
    - The master attempts to assert a Logic 1 on the `SDA` line and check whether `SDA` is recovered. If the `SDA` is not recovered, it will continue to send a maximum of nine `SCL` clocks.
2. If `SDA` line is recovered within nine clock pulses then the master will send the STOP to release the bus.
3. If `SDA` line is not recovered even after the ninth clock pulse then system needs a hardware reset.

Figure 84. SDA Recovery with 9 SCL Clocks

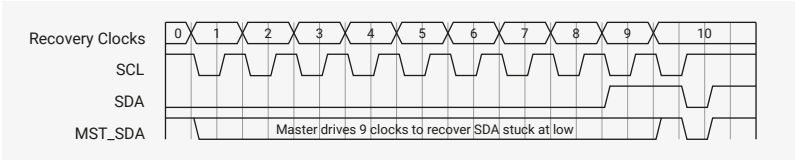

Figure 85. SDA Recovery with 6 SCL Clocks

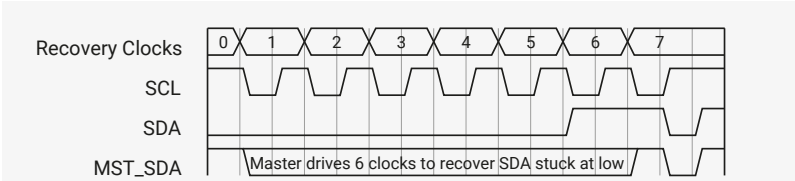

4.3.13.2. SCL Line is Stuck at LOW

In the unlikely event (due to an electric failure of a circuit) where the clock (SCL) is stuck to LOW, there is no effective method to overcome this problem but to reset the bus using the hardware reset signal.

4.3.14. IC_CLK Frequency Configuration

When the DW_apb_i2c is configured as a Standard (SS), Fast (FS)/Fast-Mode Plus (FM+), the *CNT registers must be set before any I2C bus transaction can take place in order to ensure proper I/O timing. The *CNT registers are:

- IC_SS_SCL_HCNT
- IC_SS_SCL_LCNT
- IC_FS_SCL_HCNT
- IC_FS_SCL_LCNT

NOTE

The tBUF timing and setup/hold time of START, STOP and RESTART registers uses *HCNT/*LCNT register settings for the corresponding speed mode.

NOTE

It is not necessary to program any of the *CNT registers if the DW_apb_i2c is enabled to operate only as an I2C slave, since these registers are used only to determine the SCL timing requirements for operation as an I2C master.

Table 449 lists the derivation of I2C timing parameters from the *CNT programming registers.

Table 449. Derivation of I2C Timing Parameters from *CNT Registers

Timing Parameter	Symbol	Standard Speed	Fast Speed / Fast Speed Plus
LOW period of the SCL clock	tLOW	IC_SS_SCL_LCNT	IC_FS_SCL_LCNT
HIGH period of the SCL clock	tHIGH	IC_SS_SCL_HCNT	IC_FS_SCL_HCNT
Setup time for a repeated START condition	tSU;STA	IC_SS_SCL_LCNT	IC_FS_SCL_HCNT
Hold time (repeated) START condition*	tHD;STA	IC_SS_SCL_HCNT	IC_FS_SCL_HCNT
Setup time for STOP condition	tSU;STO	IC_SS_SCL_HCNT	IC_FS_SCL_HCNT

Timing Parameter	Symbol	Standard Speed	Fast Speed / Fast Speed Plus
Bus free time between a STOP and a START condition	tBUF	IC_SS_SCL_LCNT	IC_FS_SCL_LCNT
Spike length	tSP	IC_FS_SPKLEN	IC_FS_SPKLEN
Data hold time	tHD;DAT	IC_SDA_HOLD	IC_SDA_HOLD
Data setup time	tSU;DAT	IC_SDA_SETUP	IC_SDA_SETUP

4.3.14.1. Minimum High and Low Counts in SS, FS, and FM+ Modes.

When the DW_apb_i2c operates as an I2C master, in both transmit and receive transfers:

- IC_SS_SCL_LCNT and IC_FS_SCL_LCNT register values must be larger than IC_FS_SPKLEN + 7.
- IC_SS_SCL_HCNT and IC_FS_SCL_HCNT register values must be larger than IC_FS_SPKLEN + 5.

Details regarding the DW_apb_i2c high and low counts are as follows:

- The minimum value of IC_*_SPKLEN + 7 for the *_LCNT registers is due to the time required for the DW_apb_i2c to drive SDA after a negative edge of SCL.
- The minimum value of IC_*_SPKLEN + 5 for the *_HCNT registers is due to the time required for the DW_apb_i2c to sample SDA during the high period of SCL.
- The DW_apb_i2c adds one cycle to the programmed *_LCNT value in order to generate the low period of the SCL clock; this is due to the counting logic for SCL low counting to (*_LCNT + 1).
- The DW_apb_i2c adds IC_*_SPKLEN + 7 cycles to the programmed *_HCNT value in order to generate the high period of the SCL clock; this is due to the following factors:
  - The counting logic for SCL high counts to (*_HCNT+1).
  - The digital filtering applied to the SCL line incurs a delay of SPKLEN + 2 ic_clk cycles, where SPKLEN is:
    - IC_FS_SPKLEN if the component is operating in SS or FS
  - Whenever SCL is driven one to zero by the DW_apb_i2c—that is, completing the SCL high time—an internal logic latency of three ic_clk cycles is incurred. Consequently, the minimum SCL low time of which the DW_apb_i2c is capable is nine ic_clk periods (7 + 1 + 1), while the minimum SCL high time is thirteen ic_clk periods (6 + 1 + 3 + 3).

NOTE

The total high time and low time of SCL generated by the DW_apb_i2c master is also influenced by the rise time and fall time of the SCL line, as shown in the illustration and equations in Figure 86. It should be noted that the SCL rise and fall time parameters vary, depending on external factors such as:

- Characteristics of IO driver
- Pull-up resistor value
- Total capacitance on SCL line, and so on

These characteristics are beyond the control of the DW_apb_i2c.

Figure 86. Impact of SCL Rise Time and Fall Time on Generated SCL

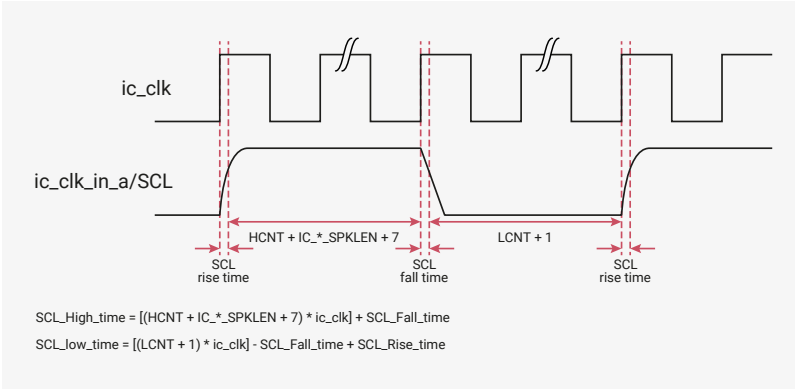

4.3.14.2. Minimum IC_CLK Frequency

This section describes the minimum ic_clk frequencies that the DW_apb_i2c supports for each speed mode, and the associated high and low count values. In Slave mode, IC_SDA_HOLD (Thd;dat) and IC_SDA_SETUP (Tsu:dat) need to be programmed to satisfy the I2C protocol timing requirements. The following examples are for the case where IC_FS_SPKLEN is programmed to two.

4.3.14.2.1. Standard Mode (SM), Fast Mode (FM), and Fast Mode Plus (FM+)

This section details how to derive a minimum ic_clk value for standard and fast modes of the DW_apb_i2c. Although the following method shows how to do fast mode calculations, you can also use the same method in order to do calculations for standard mode and fast mode plus.

NOTE

The following computations do not consider the SCL_Rise_time and SCL_Fall_time.

Given conditions and calculations for the minimum DW_apb_i2c ic_clk value in fast mode:

- Fast mode has data rate of 400kbps; implies SCL period of 1/400kHz = 2.5µs
- Minimum hcnt value of 14 as a seed value; IC_HCNT_FS = 14
- Protocol minimum SCL high and low times:
  - MIN_SCL_LOWtime_FS = 1300ns
  - MIN_SCL_HIGHtime_FS = 600ns

Derived equations:

```
SCL_PERIOD_FS / (IC_HCNT_FS + IC_LCNT_FS) = IC_CLK_PERIOD

IC_LCNT_FS × IC_CLK_PERIOD = MIN_SCL_LOWtime_FS
```

Combined, the previous equations produce the following:

```
IC_LCNT_FS × (SCL_PERIOD_FS / (IC_LCNT_FS + IC_HCNT_FS) ) = MIN_SCL_LOWtime_FS
```

Solving for IC_LCNT_FS:

```
IC_LCNT_FS × (2.5µs / (IC_LCNT_FS + 14) ) = 1.3µs
```

The previous equation gives:

```
IC_LCNT_FS = roundup(15.166) = 16
```

These calculations produce IC_LCNT_FS = 16 and IC_HCNT_FS = 14, giving an ic_clk value of:

```
2.5µs / (16 + 14) = 83.3ns = 12MHz
```

Testing these results shows that protocol requirements are satisfied.

Table 450 lists the minimum ic_clk values for all modes with high and low count values.

Table 450. ic_clk in Relation to High and Low Counts

Speed Mode	ic_clkfreq (MHz)	Minimum Value of IC_*_SPKLEN	SCL Low Time in `ic_clk`s	SCL Low Program Value	SCL Low Time	SCL High Time in `ic_clk`s	SCL High Program Value	SCL High Time
SS	2.7	1	13	12	4.7µs	14	6	5.2µs
FS	12.0	1	16	15	1.33µs	14	6	1.16µs
FM+	32	2	16	15	500ns	16	7	500ns

- The IC_*_SCL_LCNT and IC_*_SCL_HCNT registers are programmed using the SCL low and high program values in Table 450, which are calculated using SCL low count minus one, and SCL high counts minus eight, respectively. The values in Table 450 are based on IC_SDA_RX_HOLD = 0. The maximum IC_SDA_RX_HOLD value depends on the IC_*CNT registers in Master mode.
- In order to compute the HCNT and LCNT considering RC timings, use the following equations:
  - IC_HCNT_* = [(HCNT + IC_*_SPKLEN + 7) * ic_clk] + SCL_Fall_time
  - IC_LCNT_* = [(LCNT + 1) * ic_clk] - SCL_Fall_time + SCL_Rise_time

4.3.14.3. Calculating High and Low Counts

The calculations below show how to calculate SCL high and low counts for each speed mode in the DW_apb_i2c. For the calculations to work, the ic_clk frequencies used must not be less than the minimum ic_clk frequencies specified in Table 450.

The default ic_clk period value is set to 100ns, so default SCL high and low count values are calculated for each speed mode based on this clock. These values need updating according to the guidelines below.

The equation to calculate the proper number of ic_clk signals required for setting the proper SCL clocks high and low times is as follows:

```
IC_xCNT = (ROUNDUP(MIN_SCL_xxxtime*OSCFREQ,0))

MIN_SCL_HIGHtime = Minimum High Period
MIN_SCL_HIGHtime =  4000ns for 100kbps,
                    600ns for 400kbps,
                    260ns for 1000kbps,

MIN_SCL_LOWtime = Minimum Low Period
MIN_SCL_LOWtime =   4700ns for 100kbps,
```

```
                        1300ns for 400kbps,
                        500ns for 1000kbps,

    OSCFREQ = ic_clk Clock Frequency (Hz).
```

For example:

```
        OSCFREQ = 100MHz
        I2Cmode = fast, 400kbps
        MIN_SCL_HIGHtime = 600ns.
        MIN_SCL_LOWtime = 1300ns.

    IC_xCNT = (ROUNDUP(MIN_SCL_HIGH_LOWtime*OSCFREQ,0))

    IC_HCNT = (ROUNDUP(600ns * 100MHz,0))
    IC_HCNTSCL PERIOD = 60
    IC_LCNT = (ROUNDUP(1300ns * 100MHz,0))
    IC_LCNTSCL PERIOD = 130
    Actual MIN_SCL_HIGHtime = 60*(1/100MHz) = 600ns
    Actual MIN_SCL_LOWtime = 130*(1/100MHz) = 1300ns
```

4.3.15. DMA Controller Interface

The DW_apb_i2c has built-in DMA capability; it has a handshaking interface to the DMA Controller to request and control transfers. The APB bus is used to perform the data transfer to or from the DMA. DMA transfers are transferred as single accesses as data rate is relatively low.

4.3.15.1. Enabling the DMA Controller Interface

To enable the DMA Controller interface on the DW_apb_i2c, you must write the DMA Control Register (IC_DMA_CR). Writing a one into the TDMAE bit field of IC_DMA_CR register enables the DW_apb_i2c transmit handshaking interface. Writing a one into the RDMAE bit field of the IC_DMA_CR register enables the DW_apb_i2c receive handshaking interface.

4.3.15.2. Overview of Operation

The DMA Controller is programmed with the number of data items (transfer count) that are to be transmitted or received by DW_apb_i2c.

The transfer is broken into single transfers on the bus, each initiated by a request from the DW_apb_i2c.

For example, where the transfer count programmed into the DMA Controller is four. The DMA transfer consists of a series of four single transactions. If the DW_apb_i2c makes a transmit request to this channel, a single data item is written to the DW_apb_i2c TX FIFO. Similarly, if the DW_apb_i2c makes a receive request to this channel, a single data item is read from the DW_apb_i2c RX FIFO. Four separate requests must be made to this DMA channel before all four data items are written or read.

4.3.15.3. Watermark Levels

In DW_apb_i2c the registers for setting watermarks to allow DMA bursts do not need be set to anything other than their reset value. Specifically IC_DMA_TDLR and IC_DMA_RDLR can be left at reset values of zero. This is because only single transfers are needed due to the low bandwidth of I2C relative to system bandwidth, and also the DMA controller

normally has highest priority on the system bus so will generally complete very quickly.

4.3.16. Operation of Interrupt Registers

Table 451 lists the operation of the DW_apb_i2c interrupt registers and how they are set and cleared. Some bits are set by hardware and cleared by software, whereas other bits are set and cleared by hardware.

Table 451. Clearing and Setting of Interrupt Registers

Interrupt Bit Fields	Set by Hardware/Cleared by Software	Set and Cleared by Hardware
RESTART_DET	Y	N
GEN_CALL	Y	N
START_DET	Y	N
STOP_DET	Y	N
ACTIVITY	Y	N
RX_DONE	Y	N
TX_ABRT	Y	N
RD_REQ	Y	N
TX_EMPTY	N	Y
TX_OVER	Y	N
RX_FULL	N	Y
RX_OVER	Y	N
RX_UNDER	Y	N

4.3.17. List of Registers

The I2C0 and I2C1 registers start at base addresses of `0x40044000` and `0x40048000` respectively (defined as I2C0_BASE and I2C1_BASE in SDK).

NOTE

You may see references to configuration constants in the I2C register descriptions; these are **fixed** values, set at hardware design time. A full list of their values can be found in https://github.com/raspberrypi/pico-sdk/blob/master/src/rp2040/hardware_regs/include/hardware/regs/i2c.h

Table 452. List of I2C registers

Offset	Name	Info
0x00	IC_CON	I2C Control Register
0x04	IC_TAR	I2C Target Address Register
0x08	IC_SAR	I2C Slave Address Register
0x10	IC_DATA_CMD	I2C Rx/Tx Data Buffer and Command Register
0x14	IC_SS_SCL_HCNT	Standard Speed I2C Clock SCL High Count Register
0x18	IC_SS_SCL_LCNT	Standard Speed I2C Clock SCL Low Count Register
0x1c	IC_FS_SCL_HCNT	Fast Mode or Fast Mode Plus I2C Clock SCL High Count Register
0x20	IC_FS_SCL_LCNT	Fast Mode or Fast Mode Plus I2C Clock SCL Low Count Register

Offset	Name	Info
0x2c	IC_INTR_STAT	I2C Interrupt Status Register
0x30	IC_INTR_MASK	I2C Interrupt Mask Register
0x34	IC_RAW_INTR_STAT	I2C Raw Interrupt Status Register
0x38	IC_RX_TL	I2C Receive FIFO Threshold Register
0x3c	IC_TX_TL	I2C Transmit FIFO Threshold Register
0x40	IC_CLR_INTR	Clear Combined and Individual Interrupt Register
0x44	IC_CLR_RX_UNDER	Clear RX_UNDER Interrupt Register
0x48	IC_CLR_RX_OVER	Clear RX_OVER Interrupt Register
0x4c	IC_CLR_TX_OVER	Clear TX_OVER Interrupt Register
0x50	IC_CLR_RD_REQ	Clear RD_REQ Interrupt Register
0x54	IC_CLR_TX_ABRT	Clear TX_ABRT Interrupt Register
0x58	IC_CLR_RX_DONE	Clear RX_DONE Interrupt Register
0x5c	IC_CLR_ACTIVITY	Clear ACTIVITY Interrupt Register
0x60	IC_CLR_STOP_DET	Clear STOP_DET Interrupt Register
0x64	IC_CLR_START_DET	Clear START_DET Interrupt Register
0x68	IC_CLR_GEN_CALL	Clear GEN_CALL Interrupt Register
0x6c	IC_ENABLE	I2C ENABLE Register
0x70	IC_STATUS	I2C STATUS Register
0x74	IC_TXFLR	I2C Transmit FIFO Level Register
0x78	IC_RXFLR	I2C Receive FIFO Level Register
0x7c	IC_SDA_HOLD	I2C SDA Hold Time Length Register
0x80	IC_TX_ABRT_SOURCE	I2C Transmit Abort Source Register
0x84	IC_SLV_DATA_NACK_ONLY	Generate Slave Data NACK Register
0x88	IC_DMA_CR	DMA Control Register
0x8c	IC_DMA_TDLR	DMA Transmit Data Level Register
0x90	IC_DMA_RDLR	DMA Transmit Data Level Register
0x94	IC_SDA_SETUP	I2C SDA Setup Register
0x98	IC_ACK_GENERAL_CALL	I2C ACK General Call Register
0x9c	IC_ENABLE_STATUS	I2C Enable Status Register
0xa0	IC_FS_SPKLEN	I2C SS, FS or FM+ spike suppression limit
0xa8	IC_CLR_RESTART_DET	Clear RESTART_DET Interrupt Register
0xf4	IC_COMP_PARAM_1	Component Parameter Register 1
0xf8	IC_COMP_VERSION	I2C Component Version Register
0xfc	IC_COMP_TYPE	I2C Component Type Register

I2C: IC_CON Register

Offset: 0x00

Description

I2C Control Register. This register can be written only when the DW_apb_i2c is disabled, which corresponds to the IC_ENABLE[0] register being set to 0. Writes at other times have no effect.

Read/Write Access: - bit 10 is read only. - bit 11 is read only - bit 16 is read only - bit 17 is read only - bits 18 and 19 are read only.

Table 453. IC_CON Register

Bits	Description	Type	Reset
31:11	Reserved.	-	-
10	**STOP_DET_IF_MASTER_ACTIVE**: Master issues the STOP_DET interrupt irrespective of whether master is active or not	RO	0x0
9	**RX_FIFO_FULL_HLD_CTRL**: This bit controls whether DW_apb_i2c should hold the bus when the Rx FIFO is physically full to its RX_BUFFER_DEPTH, as described in the IC_RX_FULL_HLD_BUS_EN parameter. Reset value: 0x0.	RW	0x0
	Enumerated values:		
	0x0 → DISABLED: Overflow when RX_FIFO is full		
	0x1 → ENABLED: Hold bus when RX_FIFO is full		
8	**TX_EMPTY_CTRL**: This bit controls the generation of the TX_EMPTY interrupt, as described in the IC_RAW_INTR_STAT register. Reset value: 0x0.	RW	0x0
	Enumerated values:		
	0x0 → DISABLED: Default behaviour of TX_EMPTY interrupt		
	0x1 → ENABLED: Controlled generation of TX_EMPTY interrupt		
7	**STOP_DET_IFADDRESSED**: In slave mode: - 1'b1: issues the STOP_DET interrupt only when it is addressed. - 1'b0: issues the STOP_DET irrespective of whether it's addressed or not. Reset value: 0x0 NOTE: During a general call address, this slave does not issue the STOP_DET interrupt if STOP_DET_IF_ADDRESSED = 1'b1, even if the slave responds to the general call address by generating ACK. The STOP_DET interrupt is generated only when the transmitted address matches the slave address (SAR).	RW	0x0
	Enumerated values:		
	0x0 → DISABLED: slave issues STOP_DET intr always		
	0x1 → ENABLED: slave issues STOP_DET intr only if addressed		
6	**IC_SLAVE_DISABLE**: This bit controls whether I2C has its slave disabled, which means once the presetn signal is applied, then this bit is set and the slave is disabled. If this bit is set (slave is disabled), DW_apb_i2c functions only as a master and does not perform any action that requires a slave. NOTE: Software should ensure that if this bit is written with 0, then bit 0 should also be written with a 0.	RW	0x1

Bits	Description	Type	Reset
	Enumerated values:		
	0x0 → SLAVE_ENABLED: Slave mode is enabled		
	0x1 → SLAVE_DISABLED: Slave mode is disabled		
5	**IC_RESTART_EN**: Determines whether RESTART conditions may be sent when acting as a master. Some older slaves do not support handling RESTART conditions; however, RESTART conditions are used in several DW_apb_i2c operations. When RESTART is disabled, the master is prohibited from performing the following functions: - Sending a START BYTE - Performing any high-speed mode operation - High-speed mode operation - Performing direction changes in combined format mode - Performing a read operation with a 10-bit address By replacing RESTART condition followed by a STOP and a subsequent START condition, split operations are broken down into multiple DW_apb_i2c transfers. If the above operations are performed, it will result in setting bit 6 (TX_ABRT) of the IC_RAW_INTR_STAT register. Reset value: ENABLED	RW	0x1
	Enumerated values:		
	0x0 → DISABLED: Master restart disabled		
	0x1 → ENABLED: Master restart enabled		
4	**IC_10BITADDR_MASTER**: Controls whether the DW_apb_i2c starts its transfers in 7- or 10-bit addressing mode when acting as a master. - 0: 7-bit addressing - 1: 10-bit addressing	RW	0x0
	Enumerated values:		
	0x0 → ADDR_7BITS: Master 7Bit addressing mode		
	0x1 → ADDR_10BITS: Master 10Bit addressing mode		
3	**IC_10BITADDR_SLAVE**: When acting as a slave, this bit controls whether the DW_apb_i2c responds to 7- or 10-bit addresses. - 0: 7-bit addressing. The DW_apb_i2c ignores transactions that involve 10-bit addressing; for 7-bit addressing, only the lower 7 bits of the IC_SAR register are compared. - 1: 10-bit addressing. The DW_apb_i2c responds to only 10-bit addressing transfers that match the full 10 bits of the IC_SAR register.	RW	0x0
	Enumerated values:		
	0x0 → ADDR_7BITS: Slave 7Bit addressing		
	0x1 → ADDR_10BITS: Slave 10Bit addressing		

Bits	Description	Type	Reset
2:1	**SPEED**: These bits control at which speed the DW_apb_i2c operates; its setting is relevant only if one is operating the DW_apb_i2c in master mode. Hardware protects against illegal values being programmed by software. These bits must be programmed appropriately for slave mode also, as it is used to capture correct value of spike filter as per the speed mode. This register should be programmed only with a value in the range of 1 to IC_MAX_SPEED_MODE; otherwise, hardware updates this register with the value of IC_MAX_SPEED_MODE. 1: standard mode (100 kbit/s) 2: fast mode (<=400 kbit/s) or fast mode plus (<=1000Kbit/s) 3: high speed mode (3.4 Mbit/s) Note: This field is not applicable when IC_ULTRA_FAST_MODE=1	RW	0x2
	Enumerated values:		
	0x1 → STANDARD: Standard Speed mode of operation		
	0x2 → FAST: Fast or Fast Plus mode of operation		
	0x3 → HIGH: High Speed mode of operation		
0	**MASTER_MODE**: This bit controls whether the DW_apb_i2c master is enabled. NOTE: Software should ensure that if this bit is written with '1' then bit 6 should also be written with a '1'.	RW	0x1
	Enumerated values:		
	0x0 → DISABLED: Master mode is disabled		
	0x1 → ENABLED: Master mode is enabled		

I2C: IC_TAR Register

Offset: 0x04

Description

I2C Target Address Register

This register is 12 bits wide, and bits 31:12 are reserved. This register can be written to only when IC_ENABLE[0] is set to 0.

Note: If the software or application is aware that the DW_apb_i2c is not using the TAR address for the pending commands in the Tx FIFO, then it is possible to update the TAR address even while the Tx FIFO has entries (IC_STATUS[2]= 0). - It is not necessary to perform any write to this register if DW_apb_i2c is enabled as an I2C slave only.

Table 454. IC_TAR Register

Bits	Description	Type	Reset
31:12	Reserved.	-	-
11	**SPECIAL**: This bit indicates whether software performs a Device-ID or General Call or START BYTE command. - 0: ignore bit 10 GC_OR_START and use IC_TAR normally - 1: perform special I2C command as specified in Device_ID or GC_OR_START bit Reset value: 0x0	RW	0x0

Bits	Description	Type	Reset
	Enumerated values:		
	0x0 → DISABLED: Disables programming of GENERAL_CALL or START_BYTE transmission		
	0x1 → ENABLED: Enables programming of GENERAL_CALL or START_BYTE transmission		
10	**GC_OR_START**: If bit 11 (SPECIAL) is set to 1 and bit 13(Device-ID) is set to 0, then this bit indicates whether a General Call or START byte command is to be performed by the DW_apb_i2c. - 0: General Call Address - after issuing a General Call, only writes may be performed. Attempting to issue a read command results in setting bit 6 (TX_ABRT) of the IC_RAW_INTR_STAT register. The DW_apb_i2c remains in General Call mode until the SPECIAL bit value (bit 11) is cleared. - 1: START BYTE Reset value: 0x0	RW	0x0
	Enumerated values:		
	0x0 → GENERAL_CALL: GENERAL_CALL byte transmission		
	0x1 → START_BYTE: START byte transmission		
9:0	**IC_TAR**: This is the target address for any master transaction. When transmitting a General Call, these bits are ignored. To generate a START BYTE, the CPU needs to write only once into these bits. If the IC_TAR and IC_SAR are the same, loopback exists but the FIFOs are shared between master and slave, so full loopback is not feasible. Only one direction loopback mode is supported (simplex), not duplex. A master cannot transmit to itself; it can transmit to only a slave.	RW	0x055

I2C: IC_SAR Register

Offset: 0x08

Description

I2C Slave Address Register

Table 455. IC_SAR Register

Bits	Description	Type	Reset
31:10	Reserved.	-	-
9:0	**IC_SAR**: The IC_SAR holds the slave address when the I2C is operating as a slave. For 7-bit addressing, only IC_SAR[6:0] is used. This register can be written only when the I2C interface is disabled, which corresponds to the IC_ENABLE[0] register being set to 0. Writes at other times have no effect. Note: The default values cannot be any of the reserved address locations: that is, 0x00 to 0x07, or 0x78 to 0x7f. The correct operation of the device is not guaranteed if you program the IC_SAR or IC_TAR to a reserved value. Refer to Table 448 for a complete list of these reserved values.	RW	0x055

I2C: IC_DATA_CMD Register

Offset: 0x10

Description

I2C Rx/Tx Data Buffer and Command Register; this is the register the CPU writes to when filling the TX FIFO and the CPU reads from when retrieving bytes from RX FIFO.

The size of the register changes as follows:

Write: - 11 bits when IC_EMPTYFIFO_HOLD_MASTER_EN=1 - 9 bits when IC_EMPTYFIFO_HOLD_MASTER_EN=0 Read: - 12 bits when IC_FIRST_DATA_BYTE_STATUS = 1 - 8 bits when IC_FIRST_DATA_BYTE_STATUS = 0 Note: In order for the DW_apb_i2c to continue acknowledging reads, a read command should be written for every byte that is to be received; otherwise the DW_apb_i2c will stop acknowledging.

Table 456. IC_DATA_CMD Register

Bits	Description	Type	Reset
31:12	Reserved.	-	-
11	**FIRST_DATA_BYTE**: Indicates the first data byte received after the address phase for receive transfer in Master receiver or Slave receiver mode. Reset value : 0x0 NOTE: In case of APB_DATA_WIDTH=8, 1. The user has to perform two APB Reads to IC_DATA_CMD in order to get status on 11 bit. 2. In order to read the 11 bit, the user has to perform the first data byte read [7:0] (offset 0x10) and then perform the second read [15:8] (offset 0x11) in order to know the status of 11 bit (whether the data received in previous read is a first data byte or not). 3. The 11th bit is an optional read field, user can ignore 2nd byte read [15:8] (offset 0x11) if not interested in FIRST_DATA_BYTE status.	RO	0x0
	Enumerated values:		
	0x0 → INACTIVE: Sequential data byte received		
	0x1 → ACTIVE: Non sequential data byte received		
10	**RESTART**: This bit controls whether a RESTART is issued before the byte is sent or received. 1 - If IC_RESTART_EN is 1, a RESTART is issued before the data is sent/received (according to the value of CMD), regardless of whether or not the transfer direction is changing from the previous command; if IC_RESTART_EN is 0, a STOP followed by a START is issued instead. 0 - If IC_RESTART_EN is 1, a RESTART is issued only if the transfer direction is changing from the previous command; if IC_RESTART_EN is 0, a STOP followed by a START is issued instead. Reset value: 0x0	SC	0x0
	Enumerated values:		
	0x0 → DISABLE: Don't Issue RESTART before this command		
	0x1 → ENABLE: Issue RESTART before this command		

Bits	Description	Type	Reset
9	**STOP**: This bit controls whether a STOP is issued after the byte is sent or received. - 1 - STOP is issued after this byte, regardless of whether or not the Tx FIFO is empty. If the Tx FIFO is not empty, the master immediately tries to start a new transfer by issuing a START and arbitrating for the bus. - 0 - STOP is not issued after this byte, regardless of whether or not the Tx FIFO is empty. If the Tx FIFO is not empty, the master continues the current transfer by sending/receiving data bytes according to the value of the CMD bit. If the Tx FIFO is empty, the master holds the SCL line low and stalls the bus until a new command is available in the Tx FIFO. Reset value: 0x0	SC	0x0
	Enumerated values:		
	0x0 → DISABLE: Don't Issue STOP after this command		
	0x1 → ENABLE: Issue STOP after this command		
8	**CMD**: This bit controls whether a read or a write is performed. This bit does not control the direction when the DW_apb_i2con acts as a slave. It controls only the direction when it acts as a master. When a command is entered in the TX FIFO, this bit distinguishes the write and read commands. In slave-receiver mode, this bit is a 'don't care' because writes to this register are not required. In slave-transmitter mode, a '0' indicates that the data in IC_DATA_CMD is to be transmitted. When programming this bit, you should remember the following: attempting to perform a read operation after a General Call command has been sent results in a TX_ABRT interrupt (bit 6 of the IC_RAW_INTR_STAT register), unless bit 11 (SPECIAL) in the IC_TAR register has been cleared. If a '1' is written to this bit after receiving a RD_REQ interrupt, then a TX_ABRT interrupt occurs. Reset value: 0x0	SC	0x0
	Enumerated values:		
	0x0 → WRITE: Master Write Command		
	0x1 → READ: Master Read Command		
7:0	**DAT**: This register contains the data to be transmitted or received on the I2C bus. If you are writing to this register and want to perform a read, bits 7:0 (DAT) are ignored by the DW_apb_i2c. However, when you read this register, these bits return the value of data received on the DW_apb_i2c interface. Reset value: 0x0	RW	0x00

I2C: IC_SS_SCL_HCNT Register

Offset: 0x14

Description

Standard Speed I2C Clock SCL High Count Register

Table 457. IC_SS_SCL_HCNT Register

Bits	Description	Type	Reset
31:16	Reserved.	-	-

Bits	Description	Type	Reset
15:0	**IC_SS_SCL_HCNT**: This register must be set before any I2C bus transaction can take place to ensure proper I/O timing. This register sets the SCL clock high-period count for standard speed. For more information, refer to 'IC_CLK Frequency Configuration'. This register can be written only when the I2C interface is disabled which corresponds to the IC_ENABLE[0] register being set to 0. Writes at other times have no effect. The minimum valid value is 6; hardware prevents values less than this being written, and if attempted results in 6 being set. For designs with APB_DATA_WIDTH = 8, the order of programming is important to ensure the correct operation of the DW_apb_i2c. The lower byte must be programmed first. Then the upper byte is programmed. NOTE: This register must not be programmed to a value higher than 65525, because DW_apb_i2c uses a 16-bit counter to flag an I2C bus idle condition when this counter reaches a value of IC_SS_SCL_HCNT + 10.	RW	0x0028

I2C: IC_SS_SCL_LCNT Register

Offset: 0x18

Description

Standard Speed I2C Clock SCL Low Count Register

Table 458. IC_SS_SCL_LCNT Register

Bits	Description	Type	Reset
31:16	Reserved.	-	-
15:0	**IC_SS_SCL_LCNT**: This register must be set before any I2C bus transaction can take place to ensure proper I/O timing. This register sets the SCL clock low period count for standard speed. For more information, refer to 'IC_CLK Frequency Configuration' This register can be written only when the I2C interface is disabled which corresponds to the IC_ENABLE[0] register being set to 0. Writes at other times have no effect. The minimum valid value is 8; hardware prevents values less than this being written, and if attempted, results in 8 being set. For designs with APB_DATA_WIDTH = 8, the order of programming is important to ensure the correct operation of DW_apb_i2c. The lower byte must be programmed first, and then the upper byte is programmed.	RW	0x002f

I2C: IC_FS_SCL_HCNT Register

Offset: 0x1c

Description

Fast Mode or Fast Mode Plus I2C Clock SCL High Count Register

Table 459. IC_FS_SCL_HCNT Register

Bits	Description	Type	Reset
31:16	Reserved.	-	-

Bits	Description	Type	Reset
15:0	**IC_FS_SCL_HCNT**: This register must be set before any I2C bus transaction can take place to ensure proper I/O timing. This register sets the SCL clock high-period count for fast mode or fast mode plus. It is used in high-speed mode to send the Master Code and START BYTE or General CALL. For more information, refer to 'IC_CLK Frequency Configuration'. This register goes away and becomes read-only returning 0s if IC_MAX_SPEED_MODE = standard. This register can be written only when the I2C interface is disabled, which corresponds to the IC_ENABLE[0] register being set to 0. Writes at other times have no effect. The minimum valid value is 6; hardware prevents values less than this being written, and if attempted results in 6 being set. For designs with APB_DATA_WIDTH == 8 the order of programming is important to ensure the correct operation of the DW_apb_i2c. The lower byte must be programmed first. Then the upper byte is programmed.	RW	0x0006

I2C: IC_FS_SCL_LCNT Register

Offset: 0x20

Description

Fast Mode or Fast Mode Plus I2C Clock SCL Low Count Register

Table 460. IC_FS_SCL_LCNT Register

Bits	Description	Type	Reset
31:16	Reserved.	-	-
15:0	**IC_FS_SCL_LCNT**: This register must be set before any I2C bus transaction can take place to ensure proper I/O timing. This register sets the SCL clock low period count for fast speed. It is used in high-speed mode to send the Master Code and START BYTE or General CALL. For more information, refer to 'IC_CLK Frequency Configuration'. This register goes away and becomes read-only returning 0s if IC_MAX_SPEED_MODE = standard. This register can be written only when the I2C interface is disabled, which corresponds to the IC_ENABLE[0] register being set to 0. Writes at other times have no effect. The minimum valid value is 8; hardware prevents values less than this being written, and if attempted results in 8 being set. For designs with APB_DATA_WIDTH = 8 the order of programming is important to ensure the correct operation of the DW_apb_i2c. The lower byte must be programmed first. Then the upper byte is programmed. If the value is less than 8 then the count value gets changed to 8.	RW	0x000d

I2C: IC_INTR_STAT Register

Offset: 0x2c

Description

I2C Interrupt Status Register

Each bit in this register has a corresponding mask bit in the IC_INTR_MASK register. These bits are cleared by reading the matching interrupt clear register. The unmasked raw versions of these bits are available in the IC_RAW_INTR_STAT

register.

Table 461. IC_INTR_STAT Register

Bits	Description	Type	Reset
31:13	Reserved.	-	-
12	**R_RESTART_DET**: See IC_RAW_INTR_STAT for a detailed description of R_RESTART_DET bit. Reset value: 0x0	RO	0x0
	Enumerated values:		
	0x0 → INACTIVE: R_RESTART_DET interrupt is inactive		
	0x1 → ACTIVE: R_RESTART_DET interrupt is active		
11	**R_GEN_CALL**: See IC_RAW_INTR_STAT for a detailed description of R_GEN_CALL bit. Reset value: 0x0	RO	0x0
	Enumerated values:		
	0x0 → INACTIVE: R_GEN_CALL interrupt is inactive		
	0x1 → ACTIVE: R_GEN_CALL interrupt is active		
10	**R_START_DET**: See IC_RAW_INTR_STAT for a detailed description of R_START_DET bit. Reset value: 0x0	RO	0x0
	Enumerated values:		
	0x0 → INACTIVE: R_START_DET interrupt is inactive		
	0x1 → ACTIVE: R_START_DET interrupt is active		
9	**R_STOP_DET**: See IC_RAW_INTR_STAT for a detailed description of R_STOP_DET bit. Reset value: 0x0	RO	0x0
	Enumerated values:		
	0x0 → INACTIVE: R_STOP_DET interrupt is inactive		
	0x1 → ACTIVE: R_STOP_DET interrupt is active		
8	**R_ACTIVITY**: See IC_RAW_INTR_STAT for a detailed description of R_ACTIVITY bit. Reset value: 0x0	RO	0x0
	Enumerated values:		
	0x0 → INACTIVE: R_ACTIVITY interrupt is inactive		
	0x1 → ACTIVE: R_ACTIVITY interrupt is active		
7	**R_RX_DONE**: See IC_RAW_INTR_STAT for a detailed description of R_RX_DONE bit. Reset value: 0x0	RO	0x0
	Enumerated values:		

Bits	Description	Type	Reset
	0x0 → INACTIVE: R_RX_DONE interrupt is inactive		
	0x1 → ACTIVE: R_RX_DONE interrupt is active		
6	**R_TX_ABRT**: See IC_RAW_INTR_STAT for a detailed description of R_TX_ABRT bit. Reset value: 0x0	RO	0x0
	Enumerated values:		
	0x0 → INACTIVE: R_TX_ABRT interrupt is inactive		
	0x1 → ACTIVE: R_TX_ABRT interrupt is active		
5	**R_RD_REQ**: See IC_RAW_INTR_STAT for a detailed description of R_RD_REQ bit. Reset value: 0x0	RO	0x0
	Enumerated values:		
	0x0 → INACTIVE: R_RD_REQ interrupt is inactive		
	0x1 → ACTIVE: R_RD_REQ interrupt is active		
4	**R_TX_EMPTY**: See IC_RAW_INTR_STAT for a detailed description of R_TX_EMPTY bit. Reset value: 0x0	RO	0x0
	Enumerated values:		
	0x0 → INACTIVE: R_TX_EMPTY interrupt is inactive		
	0x1 → ACTIVE: R_TX_EMPTY interrupt is active		
3	**R_TX_OVER**: See IC_RAW_INTR_STAT for a detailed description of R_TX_OVER bit. Reset value: 0x0	RO	0x0
	Enumerated values:		
	0x0 → INACTIVE: R_TX_OVER interrupt is inactive		
	0x1 → ACTIVE: R_TX_OVER interrupt is active		
2	**R_RX_FULL**: See IC_RAW_INTR_STAT for a detailed description of R_RX_FULL bit. Reset value: 0x0	RO	0x0
	Enumerated values:		
	0x0 → INACTIVE: R_RX_FULL interrupt is inactive		
	0x1 → ACTIVE: R_RX_FULL interrupt is active		
1	**R_RX_OVER**: See IC_RAW_INTR_STAT for a detailed description of R_RX_OVER bit. Reset value: 0x0	RO	0x0
	Enumerated values:		

Bits	Description	Type	Reset
	0x0 → INACTIVE: R_RX_OVER interrupt is inactive		
	0x1 → ACTIVE: R_RX_OVER interrupt is active		
0	**R_RX_UNDER**: See IC_RAW_INTR_STAT for a detailed description of R_RX_UNDER bit. Reset value: 0x0	RO	0x0
	Enumerated values:		
	0x0 → INACTIVE: RX_UNDER interrupt is inactive		
	0x1 → ACTIVE: RX_UNDER interrupt is active		

I2C: IC_INTR_MASK Register

Offset: 0x30

Description

I2C Interrupt Mask Register.

These bits mask their corresponding interrupt status bits. This register is active low; a value of 0 masks the interrupt, whereas a value of 1 unmasks the interrupt.

Table 462. IC_INTR_MASK Register

Bits	Description	Type	Reset
31:13	Reserved.	-	-
12	**M_RESTART_DET**: This bit masks the R_RESTART_DET interrupt in IC_INTR_STAT register. Reset value: 0x0	RW	0x0
	Enumerated values:		
	0x0 → ENABLED: RESTART_DET interrupt is masked		
	0x1 → DISABLED: RESTART_DET interrupt is unmasked		
11	**M_GEN_CALL**: This bit masks the R_GEN_CALL interrupt in IC_INTR_STAT register. Reset value: 0x1	RW	0x1
	Enumerated values:		
	0x0 → ENABLED: GEN_CALL interrupt is masked		
	0x1 → DISABLED: GEN_CALL interrupt is unmasked		
10	**M_START_DET**: This bit masks the R_START_DET interrupt in IC_INTR_STAT register. Reset value: 0x0	RW	0x0
	Enumerated values:		
	0x0 → ENABLED: START_DET interrupt is masked		
	0x1 → DISABLED: START_DET interrupt is unmasked		

Bits	Description	Type	Reset
9	**M_STOP_DET**: This bit masks the R_STOP_DET interrupt in IC_INTR_STAT register. Reset value: 0x0	RW	0x0
	Enumerated values:		
	0x0 → ENABLED: STOP_DET interrupt is masked		
	0x1 → DISABLED: STOP_DET interrupt is unmasked		
8	**M_ACTIVITY**: This bit masks the R_ACTIVITY interrupt in IC_INTR_STAT register. Reset value: 0x0	RW	0x0
	Enumerated values:		
	0x0 → ENABLED: ACTIVITY interrupt is masked		
	0x1 → DISABLED: ACTIVITY interrupt is unmasked		
7	**M_RX_DONE**: This bit masks the R_RX_DONE interrupt in IC_INTR_STAT register. Reset value: 0x1	RW	0x1
	Enumerated values:		
	0x0 → ENABLED: RX_DONE interrupt is masked		
	0x1 → DISABLED: RX_DONE interrupt is unmasked		
6	**M_TX_ABRT**: This bit masks the R_TX_ABRT interrupt in IC_INTR_STAT register. Reset value: 0x1	RW	0x1
	Enumerated values:		
	0x0 → ENABLED: TX_ABORT interrupt is masked		
	0x1 → DISABLED: TX_ABORT interrupt is unmasked		
5	**M_RD_REQ**: This bit masks the R_RD_REQ interrupt in IC_INTR_STAT register. Reset value: 0x1	RW	0x1
	Enumerated values:		
	0x0 → ENABLED: RD_REQ interrupt is masked		
	0x1 → DISABLED: RD_REQ interrupt is unmasked		
4	**M_TX_EMPTY**: This bit masks the R_TX_EMPTY interrupt in IC_INTR_STAT register. Reset value: 0x1	RW	0x1
	Enumerated values:		
	0x0 → ENABLED: TX_EMPTY interrupt is masked		
	0x1 → DISABLED: TX_EMPTY interrupt is unmasked		

Bits	Description	Type	Reset
3	**M_TX_OVER**: This bit masks the R_TX_OVER interrupt in IC_INTR_STAT register. Reset value: 0x1	RW	0x1
	Enumerated values:		
	0x0 → ENABLED: TX_OVER interrupt is masked		
	0x1 → DISABLED: TX_OVER interrupt is unmasked		
2	**M_RX_FULL**: This bit masks the R_RX_FULL interrupt in IC_INTR_STAT register. Reset value: 0x1	RW	0x1
	Enumerated values:		
	0x0 → ENABLED: RX_FULL interrupt is masked		
	0x1 → DISABLED: RX_FULL interrupt is unmasked		
1	**M_RX_OVER**: This bit masks the R_RX_OVER interrupt in IC_INTR_STAT register. Reset value: 0x1	RW	0x1
	Enumerated values:		
	0x0 → ENABLED: RX_OVER interrupt is masked		
	0x1 → DISABLED: RX_OVER interrupt is unmasked		
0	**M_RX_UNDER**: This bit masks the R_RX_UNDER interrupt in IC_INTR_STAT register. Reset value: 0x1	RW	0x1
	Enumerated values:		
	0x0 → ENABLED: RX_UNDER interrupt is masked		
	0x1 → DISABLED: RX_UNDER interrupt is unmasked		

I2C: IC_RAW_INTR_STAT Register

Offset: 0x34

Description

I2C Raw Interrupt Status Register

Unlike the IC_INTR_STAT register, these bits are not masked so they always show the true status of the DW_apb_i2c.

Table 463. IC_RAW_INTR_STAT Register

Bits	Description	Type	Reset
31:13	Reserved.	-	-

Bits	Description	Type	Reset
12	**RESTART_DET**: Indicates whether a RESTART condition has occurred on the I2C interface when DW_apb_i2c is operating in Slave mode and the slave is being addressed. Enabled only when IC_SLV_RESTART_DET_EN=1. Note: However, in high-speed mode or during a START BYTE transfer, the RESTART comes before the address field as per the I2C protocol. In this case, the slave is not the addressed slave when the RESTART is issued, therefore DW_apb_i2c does not generate the RESTART_DET interrupt. Reset value: 0x0	RO	0x0
	Enumerated values:		
	0x0 → INACTIVE: RESTART_DET interrupt is inactive		
	0x1 → ACTIVE: RESTART_DET interrupt is active		
11	**GEN_CALL**: Set only when a General Call address is received and it is acknowledged. It stays set until it is cleared either by disabling DW_apb_i2c or when the CPU reads bit 0 of the IC_CLR_GEN_CALL register. DW_apb_i2c stores the received data in the Rx buffer. Reset value: 0x0	RO	0x0
	Enumerated values:		
	0x0 → INACTIVE: GEN_CALL interrupt is inactive		
	0x1 → ACTIVE: GEN_CALL interrupt is active		
10	**START_DET**: Indicates whether a START or RESTART condition has occurred on the I2C interface regardless of whether DW_apb_i2c is operating in slave or master mode. Reset value: 0x0	RO	0x0
	Enumerated values:		
	0x0 → INACTIVE: START_DET interrupt is inactive		
	0x1 → ACTIVE: START_DET interrupt is active		
9	**STOP_DET**: Indicates whether a STOP condition has occurred on the I2C interface regardless of whether DW_apb_i2c is operating in slave or master mode. In Slave Mode: - If IC_CON[7]=1'b1 (STOP_DET_IFADDRESSED), the STOP_DET interrupt will be issued only if slave is addressed. Note: During a general call address, this slave does not issue a STOP_DET interrupt if STOP_DET_IF_ADDRESSED=1'b1, even if the slave responds to the general call address by generating ACK. The STOP_DET interrupt is generated only when the transmitted address matches the slave address (SAR). - If IC_CON[7]=1'b0 (STOP_DET_IFADDRESSED), the STOP_DET interrupt is issued irrespective of whether it is being addressed. In Master Mode: - If IC_CON[10]=1'b1 (STOP_DET_IF_MASTER_ACTIVE),the STOP_DET interrupt will be issued only if Master is active. - If IC_CON[10]=1'b0 (STOP_DET_IFADDRESSED),the STOP_DET interrupt will be issued irrespective of whether master is active or not. Reset value: 0x0	RO	0x0
	Enumerated values:		

Bits	Description	Type	Reset
	0x0 → INACTIVE: STOP_DET interrupt is inactive		
	0x1 → ACTIVE: STOP_DET interrupt is active		
8	**ACTIVITY**: This bit captures DW_apb_i2c activity and stays set until it is cleared. There are four ways to clear it: - Disabling the DW_apb_i2c - Reading the IC_CLR_ACTIVITY register - Reading the IC_CLR_INTR register - System reset Once this bit is set, it stays set unless one of the four methods is used to clear it. Even if the DW_apb_i2c module is idle, this bit remains set until cleared, indicating that there was activity on the bus. Reset value: 0x0	RO	0x0
	Enumerated values:		
	0x0 → INACTIVE: RAW_INTR_ACTIVITY interrupt is inactive		
	0x1 → ACTIVE: RAW_INTR_ACTIVITY interrupt is active		
7	**RX_DONE**: When the DW_apb_i2c is acting as a slave-transmitter, this bit is set to 1 if the master does not acknowledge a transmitted byte. This occurs on the last byte of the transmission, indicating that the transmission is done. Reset value: 0x0	RO	0x0
	Enumerated values:		
	0x0 → INACTIVE: RX_DONE interrupt is inactive		
	0x1 → ACTIVE: RX_DONE interrupt is active		
6	**TX_ABRT**: This bit indicates if DW_apb_i2c, as an I2C transmitter, is unable to complete the intended actions on the contents of the transmit FIFO. This situation can occur both as an I2C master or an I2C slave, and is referred to as a 'transmit abort'. When this bit is set to 1, the IC_TX_ABRT_SOURCE register indicates the reason why the transmit abort takes places. Note: The DW_apb_i2c flushes/resets/empties the TX_FIFO and RX_FIFO whenever there is a transmit abort caused by any of the events tracked by the IC_TX_ABRT_SOURCE register. The FIFOs remains in this flushed state until the register IC_CLR_TX_ABRT is read. Once this read is performed, the Tx FIFO is then ready to accept more data bytes from the APB interface. Reset value: 0x0	RO	0x0
	Enumerated values:		
	0x0 → INACTIVE: TX_ABRT interrupt is inactive		
	0x1 → ACTIVE: TX_ABRT interrupt is active		
5	**RD_REQ**: This bit is set to 1 when DW_apb_i2c is acting as a slave and another I2C master is attempting to read data from DW_apb_i2c. The DW_apb_i2c holds the I2C bus in a wait state (SCL=0) until this interrupt is serviced, which means that the slave has been addressed by a remote master that is asking for data to be transferred. The processor must respond to this interrupt and then write the requested data to the IC_DATA_CMD register. This bit is set to 0 just after the processor reads the IC_CLR_RD_REQ register. Reset value: 0x0	RO	0x0

Bits	Description	Type	Reset
	Enumerated values:		
	0x0 → INACTIVE: RD_REQ interrupt is inactive		
	0x1 → ACTIVE: RD_REQ interrupt is active		
4	**TX_EMPTY**: The behavior of the TX_EMPTY interrupt status differs based on the TX_EMPTY_CTRL selection in the IC_CON register. - When TX_EMPTY_CTRL = 0: This bit is set to 1 when the transmit buffer is at or below the threshold value set in the IC_TX_TL register. - When TX_EMPTY_CTRL = 1: This bit is set to 1 when the transmit buffer is at or below the threshold value set in the IC_TX_TL register and the transmission of the address/data from the internal shift register for the most recently popped command is completed. It is automatically cleared by hardware when the buffer level goes above the threshold. When IC_ENABLE[0] is set to 0, the TX FIFO is flushed and held in reset. There the TX FIFO looks like it has no data within it, so this bit is set to 1, provided there is activity in the master or slave state machines. When there is no longer any activity, then with ic_en=0, this bit is set to 0. Reset value: 0x0.	RO	0x0
	Enumerated values:		
	0x0 → INACTIVE: TX_EMPTY interrupt is inactive		
	0x1 → ACTIVE: TX_EMPTY interrupt is active		
3	**TX_OVER**: Set during transmit if the transmit buffer is filled to IC_TX_BUFFER_DEPTH and the processor attempts to issue another I2C command by writing to the IC_DATA_CMD register. When the module is disabled, this bit keeps its level until the master or slave state machines go into idle, and when ic_en goes to 0, this interrupt is cleared. Reset value: 0x0	RO	0x0
	Enumerated values:		
	0x0 → INACTIVE: TX_OVER interrupt is inactive		
	0x1 → ACTIVE: TX_OVER interrupt is active		
2	**RX_FULL**: Set when the receive buffer reaches or goes above the RX_TL threshold in the IC_RX_TL register. It is automatically cleared by hardware when buffer level goes below the threshold. If the module is disabled (IC_ENABLE[0]=0), the RX FIFO is flushed and held in reset; therefore the RX FIFO is not full. So this bit is cleared once the IC_ENABLE bit 0 is programmed with a 0, regardless of the activity that continues. Reset value: 0x0	RO	0x0
	Enumerated values:		
	0x0 → INACTIVE: RX_FULL interrupt is inactive		
	0x1 → ACTIVE: RX_FULL interrupt is active		

Bits	Description	Type	Reset
1	**RX_OVER**: Set if the receive buffer is completely filled to IC_RX_BUFFER_DEPTH and an additional byte is received from an external I2C device. The DW_apb_i2c acknowledges this, but any data bytes received after the FIFO is full are lost. If the module is disabled (IC_ENABLE[0]=0), this bit keeps its level until the master or slave state machines go into idle, and when ic_en goes to 0, this interrupt is cleared. Note: If bit 9 of the IC_CON register (RX_FIFO_FULL_HLD_CTRL) is programmed to HIGH, then the RX_OVER interrupt never occurs, because the Rx FIFO never overflows. Reset value: 0x0	RO	0x0
	Enumerated values:		
	0x0 → INACTIVE: RX_OVER interrupt is inactive		
	0x1 → ACTIVE: RX_OVER interrupt is active		
0	**RX_UNDER**: Set if the processor attempts to read the receive buffer when it is empty by reading from the IC_DATA_CMD register. If the module is disabled (IC_ENABLE[0]=0), this bit keeps its level until the master or slave state machines go into idle, and when ic_en goes to 0, this interrupt is cleared. Reset value: 0x0	RO	0x0
	Enumerated values:		
	0x0 → INACTIVE: RX_UNDER interrupt is inactive		
	0x1 → ACTIVE: RX_UNDER interrupt is active		

I2C: IC_RX_TL Register

Offset: 0x38

Description

I2C Receive FIFO Threshold Register

Table 464. IC_RX_TL Register

Bits	Description	Type	Reset
31:8	Reserved.	-	-
7:0	**RX_TL**: Receive FIFO Threshold Level. Controls the level of entries (or above) that triggers the RX_FULL interrupt (bit 2 in IC_RAW_INTR_STAT register). The valid range is 0-255, with the additional restriction that hardware does not allow this value to be set to a value larger than the depth of the buffer. If an attempt is made to do that, the actual value set will be the maximum depth of the buffer. A value of 0 sets the threshold for 1 entry, and a value of 255 sets the threshold for 256 entries.	RW	0x00

I2C: IC_TX_TL Register

Offset: 0x3c

Description

I2C Transmit FIFO Threshold Register

Table 465. IC_TX_TL Register

Bits	Description	Type	Reset
31:8	Reserved.	-	-
7:0	**TX_TL**: Transmit FIFO Threshold Level. Controls the level of entries (or below) that trigger the TX_EMPTY interrupt (bit 4 in IC_RAW_INTR_STAT register). The valid range is 0-255, with the additional restriction that it may not be set to value larger than the depth of the buffer. If an attempt is made to do that, the actual value set will be the maximum depth of the buffer. A value of 0 sets the threshold for 0 entries, and a value of 255 sets the threshold for 255 entries.	RW	0x00

I2C: IC_CLR_INTR Register

Offset: 0x40

Description

Clear Combined and Individual Interrupt Register

Table 466. IC_CLR_INTR Register

Bits	Description	Type	Reset
31:1	Reserved.	-	-
0	**CLR_INTR**: Read this register to clear the combined interrupt, all individual interrupts, and the IC_TX_ABRT_SOURCE register. This bit does not clear hardware clearable interrupts but software clearable interrupts. Refer to Bit 9 of the IC_TX_ABRT_SOURCE register for an exception to clearing IC_TX_ABRT_SOURCE. Reset value: 0x0	RO	0x0

I2C: IC_CLR_RX_UNDER Register

Offset: 0x44

Description

Clear RX_UNDER Interrupt Register

Table 467. IC_CLR_RX_UNDER Register

Bits	Description	Type	Reset
31:1	Reserved.	-	-
0	**CLR_RX_UNDER**: Read this register to clear the RX_UNDER interrupt (bit 0) of the IC_RAW_INTR_STAT register. Reset value: 0x0	RO	0x0

I2C: IC_CLR_RX_OVER Register

Offset: 0x48

Description

Clear RX_OVER Interrupt Register

Table 468. IC_CLR_RX_OVER Register

Bits	Description	Type	Reset
31:1	Reserved.	-	-

Bits	Description	Type	Reset
0	**CLR_RX_OVER**: Read this register to clear the RX_OVER interrupt (bit 1) of the IC_RAW_INTR_STAT register. Reset value: 0x0	RO	0x0

I2C: IC_CLR_TX_OVER Register

Offset: 0x4c

Description

Clear TX_OVER Interrupt Register

Table 469. IC_CLR_TX_OVER Register

Bits	Description	Type	Reset
31:1	Reserved.	-	-
0	**CLR_TX_OVER**: Read this register to clear the TX_OVER interrupt (bit 3) of the IC_RAW_INTR_STAT register. Reset value: 0x0	RO	0x0

I2C: IC_CLR_RD_REQ Register

Offset: 0x50

Description

Clear RD_REQ Interrupt Register

Table 470. IC_CLR_RD_REQ Register

Bits	Description	Type	Reset
31:1	Reserved.	-	-
0	**CLR_RD_REQ**: Read this register to clear the RD_REQ interrupt (bit 5) of the IC_RAW_INTR_STAT register. Reset value: 0x0	RO	0x0

I2C: IC_CLR_TX_ABRT Register

Offset: 0x54

Description

Clear TX_ABRT Interrupt Register

Table 471. IC_CLR_TX_ABRT Register

Bits	Description	Type	Reset
31:1	Reserved.	-	-
0	**CLR_TX_ABRT**: Read this register to clear the TX_ABRT interrupt (bit 6) of the IC_RAW_INTR_STAT register, and the IC_TX_ABRT_SOURCE register. This also releases the TX FIFO from the flushed/reset state, allowing more writes to the TX FIFO. Refer to Bit 9 of the IC_TX_ABRT_SOURCE register for an exception to clearing IC_TX_ABRT_SOURCE. Reset value: 0x0	RO	0x0

I2C: IC_CLR_RX_DONE Register

Offset: 0x58

Description

Clear RX_DONE Interrupt Register

Table 472. IC_CLR_RX_DONE Register

Bits	Description	Type	Reset
31:1	Reserved.	-	-
0	**CLR_RX_DONE**: Read this register to clear the RX_DONE interrupt (bit 7) of the IC_RAW_INTR_STAT register. Reset value: 0x0	RO	0x0

I2C: IC_CLR_ACTIVITY Register

Offset: 0x5c

Description

Clear ACTIVITY Interrupt Register

Table 473. IC_CLR_ACTIVITY Register

Bits	Description	Type	Reset
31:1	Reserved.	-	-
0	**CLR_ACTIVITY**: Reading this register clears the ACTIVITY interrupt if the I2C is not active anymore. If the I2C module is still active on the bus, the ACTIVITY interrupt bit continues to be set. It is automatically cleared by hardware if the module is disabled and if there is no further activity on the bus. The value read from this register to get status of the ACTIVITY interrupt (bit 8) of the IC_RAW_INTR_STAT register. Reset value: 0x0	RO	0x0

I2C: IC_CLR_STOP_DET Register

Offset: 0x60

Description

Clear STOP_DET Interrupt Register

Table 474. IC_CLR_STOP_DET Register

Bits	Description	Type	Reset
31:1	Reserved.	-	-

Bits	Description	Type	Reset
0	**CLR_STOP_DET**: Read this register to clear the STOP_DET interrupt (bit 9) of the IC_RAW_INTR_STAT register. Reset value: 0x0	RO	0x0

I2C: IC_CLR_START_DET Register

Offset: 0x64

Description

Clear START_DET Interrupt Register

Table 475. IC_CLR_START_DET Register

Bits	Description	Type	Reset
31:1	Reserved.	-	-
0	**CLR_START_DET**: Read this register to clear the START_DET interrupt (bit 10) of the IC_RAW_INTR_STAT register. Reset value: 0x0	RO	0x0

I2C: IC_CLR_GEN_CALL Register

Offset: 0x68

Description

Clear GEN_CALL Interrupt Register

Table 476. IC_CLR_GEN_CALL Register

Bits	Description	Type	Reset
31:1	Reserved.	-	-
0	**CLR_GEN_CALL**: Read this register to clear the GEN_CALL interrupt (bit 11) of IC_RAW_INTR_STAT register. Reset value: 0x0	RO	0x0

I2C: IC_ENABLE Register

Offset: 0x6c

Description

I2C Enable Register

Table 477. IC_ENABLE Register

Bits	Description	Type	Reset
31:3	Reserved.	-	-
2	**TX_CMD_BLOCK**: In Master mode: - 1'b1: Blocks the transmission of data on I2C bus even if Tx FIFO has data to transmit. - 1'b0: The transmission of data starts on I2C bus automatically, as soon as the first data is available in the Tx FIFO. Note: To block the execution of Master commands, set the TX_CMD_BLOCK bit only when Tx FIFO is empty (IC_STATUS[2]==1) and Master is in Idle state (IC_STATUS[5] == 0). Any further commands put in the Tx FIFO are not executed until TX_CMD_BLOCK bit is unset. Reset value: IC_TX_CMD_BLOCK_DEFAULT	RW	0x0
	Enumerated values:		
	0x0 → NOT_BLOCKED: Tx Command execution not blocked		

Bits	Description	Type	Reset
	0x1 → BLOCKED: Tx Command execution blocked		
1	**ABORT**: When set, the controller initiates the transfer abort. - 0: ABORT not initiated or ABORT done - 1: ABORT operation in progress The software can abort the I2C transfer in master mode by setting this bit. The software can set this bit only when ENABLE is already set; otherwise, the controller ignores any write to ABORT bit. The software cannot clear the ABORT bit once set. In response to an ABORT, the controller issues a STOP and flushes the Tx FIFO after completing the current transfer, then sets the TX_ABORT interrupt after the abort operation. The ABORT bit is cleared automatically after the abort operation. For a detailed description on how to abort I2C transfers, refer to 'Aborting I2C Transfers'. Reset value: 0x0	RW	0x0
	Enumerated values:		
	0x0 → DISABLE: ABORT operation not in progress		
	0x1 → ENABLED: ABORT operation in progress		
0	**ENABLE**: Controls whether the DW_apb_i2c is enabled. - 0: Disables DW_apb_i2c (TX and RX FIFOs are held in an erased state) - 1: Enables DW_apb_i2c Software can disable DW_apb_i2c while it is active. However, it is important that care be taken to ensure that DW_apb_i2c is disabled properly. A recommended procedure is described in 'Disabling DW_apb_i2c'. When DW_apb_i2c is disabled, the following occurs: - The TX FIFO and RX FIFO get flushed. - Status bits in the IC_INTR_STAT register are still active until DW_apb_i2c goes into IDLE state. If the module is transmitting, it stops as well as deletes the contents of the transmit buffer after the current transfer is complete. If the module is receiving, the DW_apb_i2c stops the current transfer at the end of the current byte and does not acknowledge the transfer. In systems with asynchronous pclk and ic_clk when IC_CLK_TYPE parameter set to asynchronous (1), there is a two ic_clk delay when enabling or disabling the DW_apb_i2c. For a detailed description on how to disable DW_apb_i2c, refer to 'Disabling DW_apb_i2c' Reset value: 0x0	RW	0x0
	Enumerated values:		
	0x0 → DISABLED: I2C is disabled		
	0x1 → ENABLED: I2C is enabled		

I2C: IC_STATUS Register

Offset: 0x70

Description

I2C Status Register

This is a read-only register used to indicate the current transfer status and FIFO status. The status register may be read at any time. None of the bits in this register request an interrupt.

When the I2C is disabled by writing 0 in bit 0 of the IC_ENABLE register: - Bits 1 and 2 are set to 1 - Bits 3 and 10 are set to 0 When the master or slave state machines goes to idle and ic_en=0: - Bits 5 and 6 are set to 0

Table 478. IC_STATUS Register

Bits	Description	Type	Reset
31:7	Reserved.	-	-
6	**SLV_ACTIVITY**: Slave FSM Activity Status. When the Slave Finite State Machine (FSM) is not in the IDLE state, this bit is set. - 0: Slave FSM is in IDLE state so the Slave part of DW_apb_i2c is not Active - 1: Slave FSM is not in IDLE state so the Slave part of DW_apb_i2c is Active Reset value: 0x0	RO	0x0
	Enumerated values:		
	0x0 → IDLE: Slave is idle		
	0x1 → ACTIVE: Slave not idle		
5	**MST_ACTIVITY**: Master FSM Activity Status. When the Master Finite State Machine (FSM) is not in the IDLE state, this bit is set. - 0: Master FSM is in IDLE state so the Master part of DW_apb_i2c is not Active - 1: Master FSM is not in IDLE state so the Master part of DW_apb_i2c is Active Note: IC_STATUS[0]-that is, ACTIVITY bit-is the OR of SLV_ACTIVITY and MST_ACTIVITY bits. Reset value: 0x0	RO	0x0
	Enumerated values:		
	0x0 → IDLE: Master is idle		
	0x1 → ACTIVE: Master not idle		
4	**RFF**: Receive FIFO Completely Full. When the receive FIFO is completely full, this bit is set. When the receive FIFO contains one or more empty location, this bit is cleared. - 0: Receive FIFO is not full - 1: Receive FIFO is full Reset value: 0x0	RO	0x0
	Enumerated values:		
	0x0 → NOT_FULL: Rx FIFO not full		
	0x1 → FULL: Rx FIFO is full		
3	**RFNE**: Receive FIFO Not Empty. This bit is set when the receive FIFO contains one or more entries; it is cleared when the receive FIFO is empty. - 0: Receive FIFO is empty - 1: Receive FIFO is not empty Reset value: 0x0	RO	0x0
	Enumerated values:		
	0x0 → EMPTY: Rx FIFO is empty		
	0x1 → NOT_EMPTY: Rx FIFO not empty		
2	**TFE**: Transmit FIFO Completely Empty. When the transmit FIFO is completely empty, this bit is set. When it contains one or more valid entries, this bit is cleared. This bit field does not request an interrupt. - 0: Transmit FIFO is not empty - 1: Transmit FIFO is empty Reset value: 0x1	RO	0x1
	Enumerated values:		
	0x0 → NON_EMPTY: Tx FIFO not empty		
	0x1 → EMPTY: Tx FIFO is empty		

Bits	Description	Type	Reset
1	**TFNF**: Transmit FIFO Not Full. Set when the transmit FIFO contains one or more empty locations, and is cleared when the FIFO is full. - 0: Transmit FIFO is full - 1: Transmit FIFO is not full Reset value: 0x1	RO	0x1
	Enumerated values:		
	0x0 → FULL: Tx FIFO is full		
	0x1 → NOT_FULL: Tx FIFO not full		
0	**ACTIVITY**: I2C Activity Status. Reset value: 0x0	RO	0x0
	Enumerated values:		
	0x0 → INACTIVE: I2C is idle		
	0x1 → ACTIVE: I2C is active		

I2C: IC_TXFLR Register

Offset: 0x74

Description

I2C Transmit FIFO Level Register This register contains the number of valid data entries in the transmit FIFO buffer. It is cleared whenever: - The I2C is disabled - There is a transmit abort - that is, TX_ABRT bit is set in the IC_RAW_INTR_STAT register - The slave bulk transmit mode is aborted The register increments whenever data is placed into the transmit FIFO and decrements when data is taken from the transmit FIFO.

Table 479. IC_TXFLR Register

Bits	Description	Type	Reset
31:5	Reserved.	-	-
4:0	**TXFLR**: Transmit FIFO Level. Contains the number of valid data entries in the transmit FIFO. Reset value: 0x0	RO	0x00

I2C: IC_RXFLR Register

Offset: 0x78

Description

I2C Receive FIFO Level Register This register contains the number of valid data entries in the receive FIFO buffer. It is cleared whenever: - The I2C is disabled - Whenever there is a transmit abort caused by any of the events tracked in IC_TX_ABRT_SOURCE The register increments whenever data is placed into the receive FIFO and decrements when data is taken from the receive FIFO.

Table 480. IC_RXFLR Register

Bits	Description	Type	Reset
31:5	Reserved.	-	-
4:0	**RXFLR**: Receive FIFO Level. Contains the number of valid data entries in the receive FIFO. Reset value: 0x0	RO	0x00

I2C: IC_SDA_HOLD Register

Offset: 0x7c

Description

I2C SDA Hold Time Length Register

The bits [15:0] of this register are used to control the hold time of SDA during transmit in both slave and master mode (after SCL goes from HIGH to LOW).

The bits [23:16] of this register are used to extend the SDA transition (if any) whenever SCL is HIGH in the receiver in either master or slave mode.

Writes to this register succeed only when IC_ENABLE[0]=0.

The values in this register are in units of ic_clk period. The value programmed in IC_SDA_TX_HOLD must be greater than the minimum hold time in each mode (one cycle in master mode, seven cycles in slave mode) for the value to be implemented.

The programmed SDA hold time during transmit (IC_SDA_TX_HOLD) cannot exceed at any time the duration of the low part of scl. Therefore the programmed value cannot be larger than N_SCL_LOW-2, where N_SCL_LOW is the duration of the low part of the scl period measured in ic_clk cycles.

Table 481. IC_SDA_HOLD Register

Bits	Description	Type	Reset
31:24	Reserved.	-	-
23:16	**IC_SDA_RX_HOLD**: Sets the required SDA hold time in units of ic_clk period, when DW_apb_i2c acts as a receiver. Reset value: IC_DEFAULT_SDA_HOLD[23:16].	RW	0x00
15:0	**IC_SDA_TX_HOLD**: Sets the required SDA hold time in units of ic_clk period, when DW_apb_i2c acts as a transmitter. Reset value: IC_DEFAULT_SDA_HOLD[15:0].	RW	0x0001

I2C: IC_TX_ABRT_SOURCE Register

Offset: 0x80

Description

I2C Transmit Abort Source Register

This register has 32 bits that indicate the source of the TX_ABRT bit. Except for Bit 9, this register is cleared whenever the IC_CLR_TX_ABRT register or the IC_CLR_INTR register is read. To clear Bit 9, the source of the ABRT_SBYTE_NORSTRT must be fixed first; RESTART must be enabled (IC_CON[5]=1), the SPECIAL bit must be cleared (IC_TAR[11]), or the GC_OR_START bit must be cleared (IC_TAR[10]).

Once the source of the ABRT_SBYTE_NORSTRT is fixed, then this bit can be cleared in the same manner as other bits in this register. If the source of the ABRT_SBYTE_NORSTRT is not fixed before attempting to clear this bit, Bit 9 clears for one cycle and is then re-asserted.

Table 482. IC_TX_ABRT_SOURCE Register

Bits	Description	Type	Reset
31:23	**TX_FLUSH_CNT**: This field indicates the number of Tx FIFO Data Commands which are flushed due to TX_ABRT interrupt. It is cleared whenever I2C is disabled. Reset value: 0x0 Role of DW_apb_i2c: Master-Transmitter or Slave-Transmitter	RO	0x000
22:17	Reserved.	-	-

Bits	Description	Type	Reset
16	**ABRT_USER_ABRT**: This is a master-mode-only bit. Master has detected the transfer abort (IC_ENABLE[1]) Reset value: 0x0 Role of DW_apb_i2c: Master-Transmitter	RO	0x0
	Enumerated values:		
	0x0 → ABRT_USER_ABRT_VOID: Transfer abort detected by master- scenario not present		
	0x1 → ABRT_USER_ABRT_GENERATED: Transfer abort detected by master		
15	**ABRT_SLVRD_INTX**: 1: When the processor side responds to a slave mode request for data to be transmitted to a remote master and user writes a 1 in CMD (bit 8) of IC_DATA_CMD register. Reset value: 0x0 Role of DW_apb_i2c: Slave-Transmitter	RO	0x0
	Enumerated values:		
	0x0 → ABRT_SLVRD_INTX_VOID: Slave trying to transmit to remote master in read mode- scenario not present		
	0x1 → ABRT_SLVRD_INTX_GENERATED: Slave trying to transmit to remote master in read mode		
14	**ABRT_SLV_ARBLOST**: This field indicates that a Slave has lost the bus while transmitting data to a remote master. IC_TX_ABRT_SOURCE[12] is set at the same time. Note: Even though the slave never 'owns' the bus, something could go wrong on the bus. This is a fail safe check. For instance, during a data transmission at the low-to-high transition of SCL, if what is on the data bus is not what is supposed to be transmitted, then DW_apb_i2c no longer own the bus. Reset value: 0x0 Role of DW_apb_i2c: Slave-Transmitter	RO	0x0
	Enumerated values:		
	0x0 → ABRT_SLV_ARBLOST_VOID: Slave lost arbitration to remote master- scenario not present		
	0x1 → ABRT_SLV_ARBLOST_GENERATED: Slave lost arbitration to remote master		
13	**ABRT_SLVFLUSH_TXFIFO**: This field specifies that the Slave has received a read command and some data exists in the TX FIFO, so the slave issues a TX_ABRT interrupt to flush old data in TX FIFO. Reset value: 0x0 Role of DW_apb_i2c: Slave-Transmitter	RO	0x0
	Enumerated values:		

Bits	Description	Type	Reset
	0x0 → ABRT_SLVFLUSH_TXFIFO_VOID: Slave flushes existing data in TX-FIFO upon getting read command- scenario not present		
	0x1 → ABRT_SLVFLUSH_TXFIFO_GENERATED: Slave flushes existing data in TX-FIFO upon getting read command		
12	**ARB_LOST**: This field specifies that the Master has lost arbitration, or if IC_TX_ABRT_SOURCE[14] is also set, then the slave transmitter has lost arbitration. Reset value: 0x0 Role of DW_apb_i2c: Master-Transmitter or Slave-Transmitter	RO	0x0
	Enumerated values:		
	0x0 → ABRT_LOST_VOID: Master or Slave-Transmitter lost arbitration- scenario not present		
	0x1 → ABRT_LOST_GENERATED: Master or Slave-Transmitter lost arbitration		
11	**ABRT_MASTER_DIS**: This field indicates that the User tries to initiate a Master operation with the Master mode disabled. Reset value: 0x0 Role of DW_apb_i2c: Master-Transmitter or Master-Receiver	RO	0x0
	Enumerated values:		
	0x0 → ABRT_MASTER_DIS_VOID: User initiating master operation when MASTER disabled- scenario not present		
	0x1 → ABRT_MASTER_DIS_GENERATED: User initiating master operation when MASTER disabled		
10	**ABRT_10B_RD_NORSTRT**: This field indicates that the restart is disabled (IC_RESTART_EN bit (IC_CON[5]) =0) and the master sends a read command in 10-bit addressing mode. Reset value: 0x0 Role of DW_apb_i2c: Master-Receiver	RO	0x0
	Enumerated values:		
	0x0 → ABRT_10B_RD_VOID: Master not trying to read in 10Bit addressing mode when RESTART disabled		
	0x1 → ABRT_10B_RD_GENERATED: Master trying to read in 10Bit addressing mode when RESTART disabled		

Bits	Description	Type	Reset
9	**ABRT_SBYTE_NORSTRT**: To clear Bit 9, the source of the ABRT_SBYTE_NORSTRT must be fixed first; restart must be enabled (IC_CON[5]=1), the SPECIAL bit must be cleared (IC_TAR[11]), or the GC_OR_START bit must be cleared (IC_TAR[10]). Once the source of the ABRT_SBYTE_NORSTRT is fixed, then this bit can be cleared in the same manner as other bits in this register. If the source of the ABRT_SBYTE_NORSTRT is not fixed before attempting to clear this bit, bit 9 clears for one cycle and then gets reasserted. When this field is set to 1, the restart is disabled (IC_RESTART_EN bit (IC_CON[5]) =0) and the user is trying to send a START Byte. Reset value: 0x0 Role of DW_apb_i2c: Master	RO	0x0
	Enumerated values:		
	0x0 → ABRT_SBYTE_NORSTRT_VOID: User trying to send START byte when RESTART disabled- scenario not present		
	0x1 → ABRT_SBYTE_NORSTRT_GENERATED: User trying to send START byte when RESTART disabled		
8	**ABRT_HS_NORSTRT**: This field indicates that the restart is disabled (IC_RESTART_EN bit (IC_CON[5]) =0) and the user is trying to use the master to transfer data in High Speed mode. Reset value: 0x0 Role of DW_apb_i2c: Master-Transmitter or Master-Receiver	RO	0x0
	Enumerated values:		
	0x0 → ABRT_HS_NORSTRT_VOID: User trying to switch Master to HS mode when RESTART disabled- scenario not present		
	0x1 → ABRT_HS_NORSTRT_GENERATED: User trying to switch Master to HS mode when RESTART disabled		
7	**ABRT_SBYTE_ACKDET**: This field indicates that the Master has sent a START Byte and the START Byte was acknowledged (wrong behavior). Reset value: 0x0 Role of DW_apb_i2c: Master	RO	0x0
	Enumerated values:		
	0x0 → ABRT_SBYTE_ACKDET_VOID: ACK detected for START byte- scenario not present		
	0x1 → ABRT_SBYTE_ACKDET_GENERATED: ACK detected for START byte		
6	**ABRT_HS_ACKDET**: This field indicates that the Master is in High Speed mode and the High Speed Master code was acknowledged (wrong behavior). Reset value: 0x0 Role of DW_apb_i2c: Master	RO	0x0

Bits	Description	Type	Reset
	Enumerated values:		
	0x0 → ABRT_HS_ACK_VOID: HS Master code ACKed in HS Mode- scenario not present		
	0x1 → ABRT_HS_ACK_GENERATED: HS Master code ACKed in HS Mode		
5	**ABRT_GCALL_READ**: This field indicates that DW_apb_i2c in the master mode has sent a General Call but the user programmed the byte following the General Call to be a read from the bus (IC_DATA_CMD[9] is set to 1). Reset value: 0x0 Role of DW_apb_i2c: Master-Transmitter	RO	0x0
	Enumerated values:		
	0x0 → ABRT_GCALL_READ_VOID: GCALL is followed by read from bus-scenario not present		
	0x1 → ABRT_GCALL_READ_GENERATED: GCALL is followed by read from bus		
4	**ABRT_GCALL_NOACK**: This field indicates that DW_apb_i2c in master mode has sent a General Call and no slave on the bus acknowledged the General Call. Reset value: 0x0 Role of DW_apb_i2c: Master-Transmitter	RO	0x0
	Enumerated values:		
	0x0 → ABRT_GCALL_NOACK_VOID: GCALL not ACKed by any slave-scenario not present		
	0x1 → ABRT_GCALL_NOACK_GENERATED: GCALL not ACKed by any slave		
3	**ABRT_TXDATA_NOACK**: This field indicates the master-mode only bit. When the master receives an acknowledgement for the address, but when it sends data byte(s) following the address, it did not receive an acknowledge from the remote slave(s). Reset value: 0x0 Role of DW_apb_i2c: Master-Transmitter	RO	0x0
	Enumerated values:		
	0x0 → ABRT_TXDATA_NOACK_VOID: Transmitted data non-ACKed by addressed slave-scenario not present		
	0x1 → ABRT_TXDATA_NOACK_GENERATED: Transmitted data not ACKed by addressed slave		
2	**ABRT_10ADDR2_NOACK**: This field indicates that the Master is in 10-bit address mode and that the second address byte of the 10-bit address was not acknowledged by any slave. Reset value: 0x0 Role of DW_apb_i2c: Master-Transmitter or Master-Receiver	RO	0x0

Bits	Description	Type	Reset
	Enumerated values:		
	0x0 → INACTIVE: This abort is not generated		
	0x1 → ACTIVE: Byte 2 of 10Bit Address not ACKed by any slave		
1	**ABRT_10ADDR1_NOACK**: This field indicates that the Master is in 10-bit address mode and the first 10-bit address byte was not acknowledged by any slave. Reset value: 0x0 Role of DW_apb_i2c: Master-Transmitter or Master-Receiver	RO	0x0
	Enumerated values:		
	0x0 → INACTIVE: This abort is not generated		
	0x1 → ACTIVE: Byte 1 of 10Bit Address not ACKed by any slave		
0	**ABRT_7B_ADDR_NOACK**: This field indicates that the Master is in 7-bit addressing mode and the address sent was not acknowledged by any slave. Reset value: 0x0 Role of DW_apb_i2c: Master-Transmitter or Master-Receiver	RO	0x0
	Enumerated values:		
	0x0 → INACTIVE: This abort is not generated		
	0x1 → ACTIVE: This abort is generated because of NOACK for 7-bit address		

I2C: IC_SLV_DATA_NACK_ONLY Register

Offset: 0x84

Description

Generate Slave Data NACK Register

The register is used to generate a NACK for the data part of a transfer when DW_apb_i2c is acting as a slave-receiver. This register only exists when the IC_SLV_DATA_NACK_ONLY parameter is set to 1. When this parameter disabled, this register does not exist and writing to the register's address has no effect.

A write can occur on this register if both of the following conditions are met: - DW_apb_i2c is disabled (IC_ENABLE[0] = 0) - Slave part is inactive (IC_STATUS[6] = 0) Note: The IC_STATUS[6] is a register read-back location for the internal slv_activity signal; the user should poll this before writing the ic_slv_data_nack_only bit.

Table 483. IC_SLV_DATA_NACK_ONLY Register

Bits	Description	Type	Reset
31:1	Reserved.	-	-
0	**NACK**: Generate NACK. This NACK generation only occurs when DW_apb_i2c is a slave-receiver. If this register is set to a value of 1, it can only generate a NACK after a data byte is received; hence, the data transfer is aborted and the data received is not pushed to the receive buffer. When the register is set to a value of 0, it generates NACK/ACK, depending on normal criteria. - 1: generate NACK after data byte received - 0: generate NACK/ACK normally Reset value: 0x0	RW	0x0
	Enumerated values:		

Bits	Description	Type	Reset
	0x0 → DISABLED: Slave receiver generates NACK normally		
	0x1 → ENABLED: Slave receiver generates NACK upon data reception only		

I2C: IC_DMA_CR Register

Offset: 0x88

Description

DMA Control Register

The register is used to enable the DMA Controller interface operation. There is a separate bit for transmit and receive. This can be programmed regardless of the state of IC_ENABLE.

Table 484. IC_DMA_CR Register

Bits	Description	Type	Reset
31:2	Reserved.	-	-
1	**TDMAE**: Transmit DMA Enable. This bit enables/disables the transmit FIFO DMA channel. Reset value: 0x0	RW	0x0
	Enumerated values:		
	0x0 → DISABLED: transmit FIFO DMA channel disabled		
	0x1 → ENABLED: Transmit FIFO DMA channel enabled		
0	**RDMAE**: Receive DMA Enable. This bit enables/disables the receive FIFO DMA channel. Reset value: 0x0	RW	0x0
	Enumerated values:		
	0x0 → DISABLED: Receive FIFO DMA channel disabled		
	0x1 → ENABLED: Receive FIFO DMA channel enabled		

I2C: IC_DMA_TDLR Register

Offset: 0x8c

Description

DMA Transmit Data Level Register

Table 485. IC_DMA_TDLR Register

Bits	Description	Type	Reset
31:4	Reserved.	-	-
3:0	**DMATDL**: Transmit Data Level. This bit field controls the level at which a DMA request is made by the transmit logic. It is equal to the watermark level; that is, the dma_tx_req signal is generated when the number of valid data entries in the transmit FIFO is equal to or below this field value, and TDMAE = 1. Reset value: 0x0	RW	0x0

I2C: IC_DMA_RDLR Register

Offset: 0x90

Description

I2C Receive Data Level Register

Table 486. IC_DMA_RDLR Register

Bits	Description	Type	Reset
31:4	Reserved.	-	-
3:0	**DMARDL**: Receive Data Level. This bit field controls the level at which a DMA request is made by the receive logic. The watermark level = DMARDL+1; that is, dma_rx_req is generated when the number of valid data entries in the receive FIFO is equal to or more than this field value + 1, and RDMAE =1. For instance, when DMARDL is 0, then dma_rx_req is asserted when 1 or more data entries are present in the receive FIFO. Reset value: 0x0	RW	0x0

I2C: IC_SDA_SETUP Register

Offset: 0x94

Description

I2C SDA Setup Register

This register controls the amount of time delay (in terms of number of ic_clk clock periods) introduced in the rising edge of SCL - relative to SDA changing - when DW_apb_i2c services a read request in a slave-transmitter operation. The relevant I2C requirement is tSU:DAT (note 4) as detailed in the I2C Bus Specification. This register must be programmed with a value equal to or greater than 2.

Writes to this register succeed only when IC_ENABLE[0] = 0.

Note: The length of setup time is calculated using [(IC_SDA_SETUP - 1) * (ic_clk_period)], so if the user requires 10 ic_clk periods of setup time, they should program a value of 11. The IC_SDA_SETUP register is only used by the DW_apb_i2c when operating as a slave transmitter.

Table 487. IC_SDA_SETUP Register

Bits	Description	Type	Reset
31:8	Reserved.	-	-
7:0	**SDA_SETUP**: SDA Setup. It is recommended that if the required delay is 1000ns, then for an ic_clk frequency of 10 MHz, IC_SDA_SETUP should be programmed to a value of 11. IC_SDA_SETUP must be programmed with a minimum value of 2.	RW	0x64

I2C: IC_ACK_GENERAL_CALL Register

Offset: 0x98

Description

I2C ACK General Call Register

The register controls whether DW_apb_i2c responds with a ACK or NACK when it receives an I2C General Call address.

This register is applicable only when the DW_apb_i2c is in slave mode.

Table 488. IC_ACK_GENERAL_CALL Register

Bits	Description	Type	Reset
31:1	Reserved.	-	-
0	**ACK_GEN_CALL**: ACK General Call. When set to 1, DW_apb_i2c responds with a ACK (by asserting ic_data_oe) when it receives a General Call. Otherwise, DW_apb_i2c responds with a NACK (by negating ic_data_oe).	RW	0x1
	Enumerated values:		
	0x0 → DISABLED: Generate NACK for a General Call		
	0x1 → ENABLED: Generate ACK for a General Call		

I2C: IC_ENABLE_STATUS Register

Offset: 0x9c

Description

I2C Enable Status Register

The register is used to report the DW_apb_i2c hardware status when the IC_ENABLE[0] register is set from 1 to 0; that is, when DW_apb_i2c is disabled.

If IC_ENABLE[0] has been set to 1, bits 2:1 are forced to 0, and bit 0 is forced to 1.

If IC_ENABLE[0] has been set to 0, bits 2:1 is only be valid as soon as bit 0 is read as '0'.

Note: When IC_ENABLE[0] has been set to 0, a delay occurs for bit 0 to be read as 0 because disabling the DW_apb_i2c depends on I2C bus activities.

Table 489. IC_ENABLE_STATUS Register

Bits	Description	Type	Reset
31:3	Reserved.	-	-
2	**SLV_RX_DATA_LOST**: Slave Received Data Lost. This bit indicates if a Slave-Receiver operation has been aborted with at least one data byte received from an I2C transfer due to the setting bit 0 of IC_ENABLE from 1 to 0. When read as 1, DW_apb_i2c is deemed to have been actively engaged in an aborted I2C transfer (with matching address) and the data phase of the I2C transfer has been entered, even though a data byte has been responded with a NACK. Note: If the remote I2C master terminates the transfer with a STOP condition before the DW_apb_i2c has a chance to NACK a transfer, and IC_ENABLE[0] has been set to 0, then this bit is also set to 1. When read as 0, DW_apb_i2c is deemed to have been disabled without being actively involved in the data phase of a Slave-Receiver transfer. Note: The CPU can safely read this bit when IC_EN (bit 0) is read as 0. Reset value: 0x0	RO	0x0
	Enumerated values:		
	0x0 → INACTIVE: Slave RX Data is not lost		
	0x1 → ACTIVE: Slave RX Data is lost		

Bits	Description	Type	Reset
1	**SLV_DISABLED_WHILE_BUSY**: Slave Disabled While Busy (Transmit, Receive). This bit indicates if a potential or active Slave operation has been aborted due to the setting bit 0 of the IC_ENABLE register from 1 to 0. This bit is set when the CPU writes a 0 to the IC_ENABLE register while: (a) DW_apb_i2c is receiving the address byte of the Slave-Transmitter operation from a remote master; OR, (b) address and data bytes of the Slave-Receiver operation from a remote master. When read as 1, DW_apb_i2c is deemed to have forced a NACK during any part of an I2C transfer, irrespective of whether the I2C address matches the slave address set in DW_apb_i2c (IC_SAR register) OR if the transfer is completed before IC_ENABLE is set to 0 but has not taken effect. Note: If the remote I2C master terminates the transfer with a STOP condition before the DW_apb_i2c has a chance to NACK a transfer, and IC_ENABLE[0] has been set to 0, then this bit will also be set to 1. When read as 0, DW_apb_i2c is deemed to have been disabled when there is master activity, or when the I2C bus is idle. Note: The CPU can safely read this bit when IC_EN (bit 0) is read as 0. Reset value: 0x0	RO	0x0
	Enumerated values:		
	0x0 → INACTIVE: Slave is disabled when it is idle		
	0x1 → ACTIVE: Slave is disabled when it is active		
0	**IC_EN**: ic_en Status. This bit always reflects the value driven on the output port ic_en. - When read as 1, DW_apb_i2c is deemed to be in an enabled state. - When read as 0, DW_apb_i2c is deemed completely inactive. Note: The CPU can safely read this bit anytime. When this bit is read as 0, the CPU can safely read SLV_RX_DATA_LOST (bit 2) and SLV_DISABLED_WHILE_BUSY (bit 1). Reset value: 0x0	RO	0x0
	Enumerated values:		
	0x0 → DISABLED: I2C disabled		
	0x1 → ENABLED: I2C enabled		

I2C: IC_FS_SPKLEN Register

Offset: 0xa0

Description

I2C SS, FS or FM+ spike suppression limit

This register is used to store the duration, measured in ic_clk cycles, of the longest spike that is filtered out by the spike suppression logic when the component is operating in SS, FS or FM+ modes. The relevant I2C requirement is tSP (table

4) as detailed in the I2C Bus Specification. This register must be programmed with a minimum value of 1.

Table 490. IC_FS_SPKLEN Register

Bits	Description	Type	Reset
31:8	Reserved.	-	-
7:0	**IC_FS_SPKLEN**: This register must be set before any I2C bus transaction can take place to ensure stable operation. This register sets the duration, measured in ic_clk cycles, of the longest spike in the SCL or SDA lines that will be filtered out by the spike suppression logic. This register can be written only when the I2C interface is disabled which corresponds to the IC_ENABLE[0] register being set to 0. Writes at other times have no effect. The minimum valid value is 1; hardware prevents values less than this being written, and if attempted results in 1 being set. or more information, refer to 'Spike Suppression'.	RW	0x07

I2C: IC_CLR_RESTART_DET Register

Offset: 0xa8

Description

Clear RESTART_DET Interrupt Register

Table 491. IC_CLR_RESTART_DET Register

Bits	Description	Type	Reset
31:1	Reserved.	-	-
0	**CLR_RESTART_DET**: Read this register to clear the RESTART_DET interrupt (bit 12) of IC_RAW_INTR_STAT register. Reset value: 0x0	RO	0x0

I2C: IC_COMP_PARAM_1 Register

Offset: 0xf4

Description

Component Parameter Register 1

Note This register is not implemented and therefore reads as 0. If it was implemented it would be a constant read-only register that contains encoded information about the component's parameter settings. Fields shown below are the settings for those parameters

Table 492. IC_COMP_PARAM_1 Register

Bits	Description	Type	Reset
31:24	Reserved.	-	-
23:16	**TX_BUFFER_DEPTH**: TX Buffer Depth = 16	RO	0x00
15:8	**RX_BUFFER_DEPTH**: RX Buffer Depth = 16	RO	0x00
7	**ADD_ENCODED_PARAMS**: Encoded parameters not visible	RO	0x0
6	**HAS_DMA**: DMA handshaking signals are enabled	RO	0x0
5	**INTR_IO**: COMBINED Interrupt outputs	RO	0x0
4	**HC_COUNT_VALUES**: Programmable count values for each mode.	RO	0x0
3:2	**MAX_SPEED_MODE**: MAX SPEED MODE = FAST MODE	RO	0x0
1:0	**APB_DATA_WIDTH**: APB data bus width is 32 bits	RO	0x0

I2C: IC_COMP_VERSION Register

Offset: 0xf8

Description

I2C Component Version Register

Table 493. IC_COMP_VERSION Register

Bits	Description	Type	Reset
31:0	**IC_COMP_VERSION**	RO	0x3230312a

I2C: IC_COMP_TYPE Register

Offset: 0xfc

Description

I2C Component Type Register

Table 494. IC_COMP_TYPE Register

Bits	Description	Type	Reset
31:0	**IC_COMP_TYPE**: Designware Component Type number = 0x44_57_01_40. This assigned unique hex value is constant and is derived from the two ASCII letters 'DW' followed by a 16-bit unsigned number.	RO	0x44570140

4.4. SPI

ARM Documentation

Excerpted from the ARM PrimeCell Synchronous Serial Port (PL022) Technical Reference Manual. Used with permission.

RP2040 has two identical SPI controllers, both based on an ARM Primecell Synchronous Serial Port (SSP) (PL022) (Revision r1p4). Note this is NOT the same as the QSPI interface covered in Section 4.10.

Each controller supports the following features:

- Master or Slave modes
  - Motorola SPI-compatible interface
  - Texas Instruments synchronous serial interface
  - National Semiconductor Microwire interface
- 8 deep Tx and Rx FIFOs
- Interrupt generation to service FIFOs or indicate error conditions
- Can be driven from DMA
- Programmable clock rate
- Programmable data size 4-16 bits

Each controller can be connected to a number of GPIO pins as defined in the GPIO muxing Table 279 in Section 2.19.2. Connections to the GPIO muxing are prefixed with the SPI instance name `spi0_` or `spi1_`, and include the following:

- clock `sclk` (connects to SSPCLKOUT in the following sections when the controller is operating in master mode, or SSPCLKIN when in slave mode)
- active low chip select or frame sync `ss_n` (referred to as SSPFSSOUT in the following sections)
- transmit data `tx` (referred to as SSPTXD in the following sections, noting that nSSPOE is NOT connected to the `tx` pad, so output data is not tristated by the SPI controller)

- receive data `rd` (referred to as SSPRXD in the following sections)

The SPI TX pin function is wired to always assert the pad output enable, and is not driven from nSSPOE. When multiple SPI slaves are sharing a bus software would need to switch the output enable. This could be done by toggling `oeover` field of the relevant `iobank0.ctrl` register, or by switching GPIO function.

The SPI uses `clk_peri` as its reference clock for SPI timing, and is referred to as SSPCLK in the following sections. `clk_sys` is used as the bus clock, and is referred to as PCLK in the following sections (also see Section 2.15.1).

4.4.1. Overview

The PrimeCell SSP is a master or slave interface for synchronous serial communication with peripheral devices that have Motorola SPI, National Semiconductor Microwire, or Texas Instruments synchronous serial interfaces.

The PrimeCell SSP performs serial-to-parallel conversion on data received from a peripheral device. The CPU accesses data, control, and status information through the AMBA APB interface. The transmit and receive paths are buffered with internal FIFO memories enabling up to eight 16-bit values to be stored independently in both transmit and receive modes. Serial data is transmitted on SSPTXD and received on SSPRXD.

The PrimeCell SSP includes a programmable bit rate clock divider and prescaler to generate the serial output clock, SSPCLKOUT, from the input clock, SSPCLK. Bit rates are supported to 2MHz and higher, subject to choice of frequency for SSPCLK, and the maximum bit rate is determined by peripheral devices.

You can use the control registers SSPCR0 and SSPCR1 to program the PrimeCell SSP operating mode, frame format, and size.

The following individually maskable interrupts are generated:

- SSPTXINTR requests servicing of the transmit buffer
- SSPRXINTR requests servicing of the receive buffer
- SSPRORINTR indicates an overrun condition in the receive FIFO
- SSPRTINTR indicates that a timeout period expired while data was present in the receive FIFO.

A single combined interrupt is asserted if any of the individual interrupts are asserted and unmasked. This interrupt is connected to the processor interrupt controllers in RP2040.

In addition to the above interrupts, a set of DMA signals are provided for interfacing with a DMA controller.

Depending on the operating mode selected, the SSPFSSOUT output operates as:

- an active-HIGH frame synchronization output for Texas Instruments synchronous serial frame format
- an active-LOW slave select for SPI and Microwire.

4.4.2. Functional Description

Figure 87. PrimeCell SSP block diagram. For clarity, does not show the test logic.

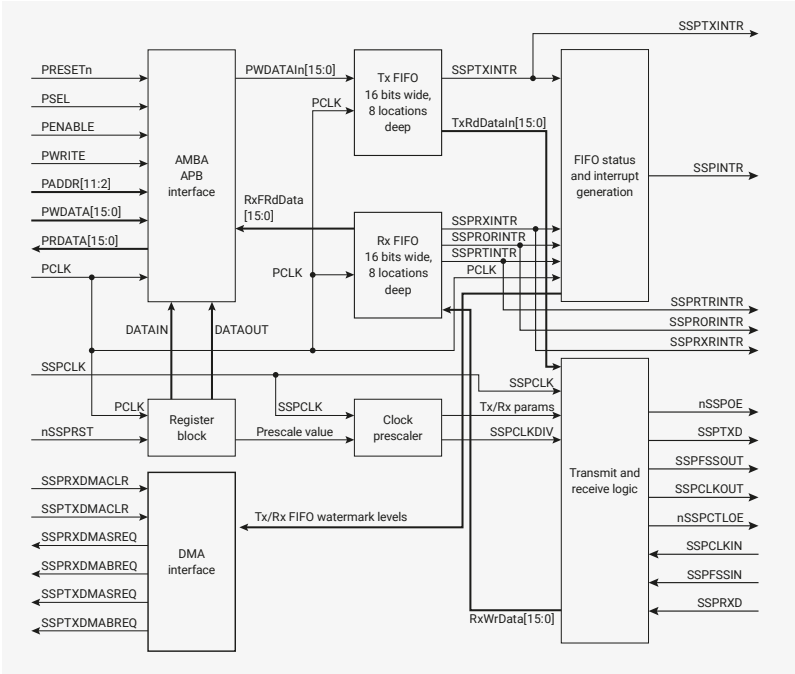

4.4.2.1. AMBA APB interface

The AMBA APB interface generates read and write decodes for accesses to status and control registers, and transmit and receive FIFO memories.

4.4.2.2. Register block

The register block stores data written, or to be read, across the AMBA APB interface.

4.4.2.3. Clock prescaler

When configured as a master, an internal prescaler, comprising two free-running reloadable serially linked counters, provides the serial output clock SSPCLKOUT.

You can program the clock prescaler, using the SSPCPSR register, to divide SSPCLK by a factor of 2-254 in steps of two. By not utilizing the least significant bit of the SSPCPSR register, division by an odd number is not possible which ensures that a symmetrical, equal mark space ratio, clock is generated. See SSPCPSR.

The output of the prescaler is divided again by a factor of 1-256, by programming the SSPCR0 control register, to give the final master output clock SSPCLKOUT.

NOTE

The PCLK and SSPCLK clock inputs in Figure 87 are connected to the `clk_sys` and `clk_peri` system-level clock nets on RP2040, respectively. By default `clk_peri` is attached directly to the system clock, but can be detached to maintain constant SPI frequency if the system clock is varied dynamically. See Figure 28 for an overview of the RP2040 clock architecture.

4.4.2.4. Transmit FIFO

The common transmit FIFO is a 16-bit wide, 8-locations deep memory buffer. CPU data written across the AMBA APB

interface are stored in the buffer until read out by the transmit logic.

When configured as a master or a slave, parallel data is written into the transmit FIFO prior to serial conversion, and transmission to the attached slave or master respectively, through the SSPTXD pin.

4.4.2.5. Receive FIFO

The common receive FIFO is a 16-bit wide, 8-locations deep memory buffer. Received data from the serial interface are stored in the buffer until read out by the CPU across the AMBA APB interface.

When configured as a master or slave, serial data received through the SSPRXD pin is registered prior to parallel loading into the attached slave or master receive FIFO respectively.

4.4.2.6. Transmit and receive logic

When configured as a master, the clock to the attached slaves is derived from a divided-down version of SSPCLK through the previously described prescaler operations. The master transmit logic successively reads a value from its transmit FIFO and performs parallel to serial conversion on it. Then, the serial data stream and frame control signal, synchronized to SSPCLKOUT, are output through the SSPTXD pin to the attached slaves. The master receive logic performs serial to parallel conversion on the incoming synchronous SSPRXD data stream, extracting and storing values into its receive FIFO, for subsequent reading through the APB interface.

When configured as a slave, the SSPCLKIN clock is provided by an attached master and used to time its transmission and reception sequences. The slave transmit logic, under control of the master clock, successively reads a value from its transmit FIFO, performs parallel to serial conversion, then outputs the serial data stream and frame control signal through the slave SSPTXD pin. The slave receive logic performs serial to parallel conversion on the incoming SSPRXD data stream, extracting and storing values into its receive FIFO, for subsequent reading through the APB interface.

4.4.2.7. Interrupt generation logic

The PrimeCell SSP generates four individual maskable, active-HIGH interrupts. A combined interrupt output is generated as an OR function of the individual interrupt requests.

The transmit and receive dynamic data-flow interrupts, SSPTXINTR and SSPRXINTR, are separated from the status interrupts so that data can be read or written in response to the FIFO trigger levels.

4.4.2.8. DMA interface

The PrimeCell SSP provides an interface to connect to a DMA controller, see Section 4.4.3.16.

4.4.2.9. Synchronizing registers and logic

The PrimeCell SSP supports both asynchronous and synchronous operation of the clocks, PCLK and SSPCLK. Synchronization registers and handshaking logic have been implemented, and are active at all times. Synchronization of control signals is performed on both directions of data flow, that is:

- from the PCLK to the SSPCLK domain
- from the SSPCLK to the PCLK domain.

4.4.3. Operation

4.4.3.1. Interface reset

The PrimeCell SSP is reset by the global reset signal, PRESETn, and a block-specific reset signal, nSSPRST. The device reset controller asserts nSSPRST asynchronously and negate it synchronously to SSPCLK.

4.4.3.2. Configuring the SSP

Following reset, the PrimeCell SSP logic is disabled and must be configured when in this state. It is necessary to program control registers SSPCR0 and SSPCR1 to configure the peripheral as a master or slave operating under one of the following protocols:

- Motorola SPI
- Texas Instruments SSI
- National Semiconductor.

The bit rate, derived from the external SSPCLK, requires the programming of the clock prescale register SSPCPSR.

4.4.3.3. Enable PrimeCell SSP operation

You can either prime the transmit FIFO, by writing up to eight 16-bit values when the PrimeCell SSP is disabled, or permit the transmit FIFO service request to interrupt the CPU. Once enabled, transmission or reception of data begins on the transmit, SSPTXD, and receive, SSPRXD, pins.

4.4.3.4. Clock ratios

There is a constraint on the ratio of the frequencies of PCLK to SSPCLK. The frequency of SSPCLK must be less than or equal to that of PCLK. This ensures that control signals from the SSPCLK domain to the PCLK domain are guaranteed to get synchronized before one frame duration:

$$F_{SSPCLK} <= F_{PCLK}.$$

In the slave mode of operation, the SSPCLKIN signal from the external master is double-synchronized and then delayed to detect an edge. It takes three SSPCLKs to detect an edge on SSPCLKIN. SSPTXD has less setup time to the falling edge of SSPCLKIN on which the master is sampling the line.

The setup and hold times on SSPRXD, with reference to SSPCLKIN, must be more conservative to ensure that it is at the right value when the actual sampling occurs within the SSPMS. To ensure correct device operation, SSPCLK must be at least 12 times faster than the maximum expected frequency of SSPCLKIN.

The frequency selected for SSPCLK must accommodate the desired range of bit clock rates. The ratio of minimum SSPCLK frequency to SSPCLKOUT maximum frequency in the case of the slave mode is 12, and for the master mode, it is two.

For example, at the maximum SSPCLK (`clk_peri`) frequency on RP2040 of 133MHz, the maximum peak bit rate in master mode is 62.5Mbps. This is achieved with the SSPCPSR register programmed with a value of 2, and the SCR[7:0] field in the SSPCR0 register programmed with a value of 0.

In slave mode, the same maximum SSPCLK frequency of 133MHz can achieve a peak bit rate of 133 / 12 = ~11.083Mbps. The SSPCPSR register can be programmed with a value of 12, and the SCR[7:0] field in the SSPCR0 register can be programmed with a value of 0. Similarly, the ratio of SSPCLK maximum frequency to SSPCLKOUT minimum frequency is 254 × 256.

The minimum frequency of SSPCLK is governed by the following inequalities, both of which must be satisfied:

$F_{SSPCLK}(min) \geq 2 \times F_{SSPCLKOUT}(max)$, for master mode

$F_{SSPCLK}(min) \geq 12 \times F_{SSPCLKIN}(max)$, for slave mode.

The maximum frequency of SSPCLK is governed by the following inequalities, both of which must be satisfied:

$F_{SSPCLK}(max) \leq 254 \times 256 \times F_{SSPCLKOUT}(min)$, for master mode

$F_{SSPCLK}(max) \leq 254 \times 256 \times F_{SSPCLKIN}(min)$, for slave mode.

4.4.3.5. Programming the SSPCR0 Control Register

The SSPCR0 register is used to:

- program the serial clock rate
- select one of the three protocols
- select the data word size, where applicable.

The Serial Clock Rate (SCR) value, in conjunction with the SSPCPSR clock prescale divisor value, CPSDVSR, is used to derive the PrimeCell SSP transmit and receive bit rate from the external SSPCLK.

The frame format is programmed through the FRF bits, and the data word size through the DSS bits.

Bit phase and polarity, applicable to Motorola SPI format only, are programmed through the SPH and SPO bits.

4.4.3.6. Programming the SSPCR1 Control Register

The SSPCR1 register is used to:

- select master or slave mode
- enable a loop back test feature
- enable the PrimeCell SSP peripheral.

To configure the PrimeCell SSP as a master, clear the SSPCR1 register master or slave selection bit, MS, to 0. This is the default value on reset.

Setting the SSPCR1 register MS bit to 1 configures the PrimeCell SSP as a slave. When configured as a slave, enabling or disabling of the PrimeCell SSP SSPTXD signal is provided through the SSPCR1 slave mode SSPTXD output disable bit, SOD. You can use this in some multi-slave environments where masters might parallel broadcast.

To enable the operation of the PrimeCell SSP, set the Synchronous Serial Port Enable (SSE) bit to 1.

4.4.3.6.1. Bit rate generation

The serial bit rate is derived by dividing down the input clock, SSPCLK. The clock is first divided by an even prescale value CPSDVSR in the range 2-254, and is programmed in SSPCPSR. The clock is divided again by a value in the range 1-256, that is 1 + SCR, where SCR is the value programmed in SSPCR0.

The following equation defines the frequency of the output signal bit clock, SSPCLKOUT:

$$F_{SSPCLKOUT} = \frac{F_{SSPCLK}}{CPSDVSR \times (1 + SCR)}$$

For example, if SSPCLK is 125MHz, and CPSDVSR = 2, then SSPCLKOUT has a frequency range from 244kHz - 62.5MHz.

4.4.3.7. Frame format

Each data frame is between 4-16 bits long, depending on the size of data programmed, and is transmitted starting with the MSB. You can select the following basic frame types:

- Texas Instruments synchronous serial
- Motorola SPI
- National Semiconductor Microwire.

For all formats, the serial clock, SSPCLKOUT, is held inactive while the PrimeCell SSP is idle, and transitions at the programmed frequency only during active transmission or reception of data. The idle state of SSPCLKOUT is utilized to provide a receive timeout indication that occurs when the receive FIFO still contains data after a timeout period.

For Motorola SPI and National Semiconductor Microwire frame formats, the serial frame, SSPFSSOUT, pin is active-LOW, and is asserted, pulled-down, during the entire transmission of the frame.

For Texas Instruments synchronous serial frame format, the SSPFSSOUT pin is pulsed for one serial clock period, starting at its rising edge, prior to the transmission of each frame. For this frame format, both the PrimeCell SSP and the off-chip slave device drive their output data on the rising edge of SSPCLKOUT, and latch data from the other device on the falling edge.

Unlike the full-duplex transmission of the other two frame formats, the National Semiconductor Microwire format uses a special master-slave messaging technique that operates at half-duplex. In this mode, when a frame begins, an 8-bit control message is transmitted to the off-chip slave. During this transmit, the SSS receives no incoming data. After the message has been sent, the off-chip slave decodes it and, after waiting one serial clock after the last bit of the 8-bit control message has been sent, responds with the requested data. The returned data can be 4-16 bits in length, making the total frame length in the range 13-25 bits.

4.4.3.8. Texas Instruments synchronous serial frame format

Figure 88 shows the Texas Instruments synchronous serial frame format for a single transmitted frame.

Figure 88. Texas Instruments synchronous serial frame format, single transfer

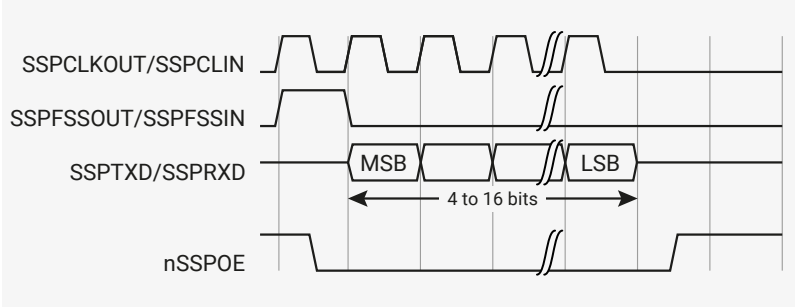

In this mode, SSPCLKOUT and SSPFSSOUT are forced LOW, and the transmit data line, SSPTXD is tristated whenever the PrimeCell SSP is idle. When the bottom entry of the transmit FIFO contains data, SSPFSSOUT is pulsed HIGH for one SSPCLKOUT period. The value to be transmitted is also transferred from the transmit FIFO to the serial shift register of the transmit logic. On the next rising edge of SSPCLKOUT, the MSB of the 4-bit to 16-bit data frame is shifted out on the SSPTXD pin. In a similar way, the MSB of the received data is shifted onto the SSPRXD pin by the off-chip serial slave device.

Both the PrimeCell SSP and the off-chip serial slave device then clock each data bit into their serial shifter on the falling edge of each SSPCLKOUT. The received data is transferred from the serial shifter to the receive FIFO on the first rising edge of PCLK after the LSB has been latched.

Figure 89 shows the Texas Instruments synchronous serial frame format when back-to-back frames are transmitted.

Figure 89. Texas Instruments synchronous serial frame format, continuous transfer

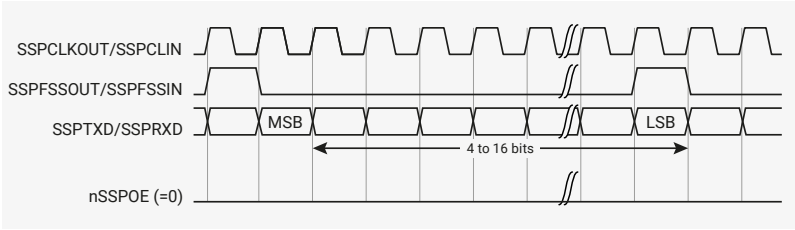

4.4.3.9. Motorola SPI frame format

The Motorola SPI interface is a four-wire interface where the SSPFSSOUT signal behaves as a slave select. The main feature of the Motorola SPI format is that you can program the inactive state and phase of the SSPCLKOUT signal using the SPO and SPH bits of the SSPSCR0 control register.

4.4.3.9.1. SPO, clock polarity

When the SPO clock polarity control bit is LOW, it produces a steady state LOW value on the SSPCLKOUT pin. If the SPO clock polarity control bit is HIGH, a steady state HIGH value is placed on the SSPCLKOUT pin when data is not being transferred.

4.4.3.9.2. SPH, clock phase

The SPH control bit selects the clock edge that captures data and enables it to change state. It has the most impact on the first bit transmitted by either permitting or not permitting a clock transition before the first data capture edge.

When the SPH phase control bit is LOW, data is captured on the first clock edge transition.

When the SPH clock phase control bit is HIGH, data is captured on the second clock edge transition.

4.4.3.10. Motorola SPI Format with SPO=0, SPH=0

Figure 90 and Figure 91 shows a continuous transmission signal sequence for Motorola SPI frame format with SPO=0, SPH=0. Figure 90 shows a single transmission signal sequence for Motorola SPI frame format with SPO=0, SPH=0.

Figure 90. Motorola SPI frame format, single transfer, with SPO=0 and SPH=0

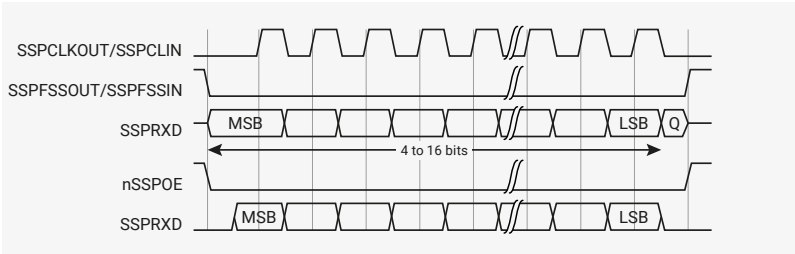

Figure 91 shows a continuous transmission signal sequence for Motorola SPI frame format with SPO=0, SPH=0.

Figure 91. Motorola SPI frame format, single transfer, with SPO=0 and SPH=0

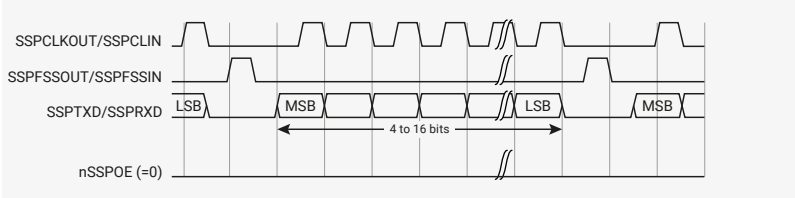

In this configuration, during idle periods:

- the SSPCLKOUT signal is forced LOW

- the SSPFSSOUT signal is forced HIGH
- the transmit data line SSPTXD is arbitrarily forced LOW
- the nSSPOE pad enable signal is forced HIGH (note this is not connected to the pad in RP2040)
- when the PrimeCell SSP is configured as a master, the nSSPCTLOE line is driven LOW, enabling the SSPCLKOUT pad, active-LOW enable
- when the PrimeCell SSP is configured as a slave, the nSSPCTLOE line is driven HIGH, disabling the SSPCLKOUT pad, active-LOW enable.

If the PrimeCell SSP is enable, and there is valid data within the transmit FIFO, the start of transmission is signified by the SSPFSSOUT master signal being driven LOW. This causes slave data to be enabled onto the SSPRXD input line of the master. The nSSPOE line is driven LOW, enabling the master SSPTXD output pad.

One-half SSPCLKOUT period later, valid master data is transferred to the SSPTXD pin. Now that both the master and slave data have been set, the SSPCLKOUT master clock pin goes HIGH after one additional half SSPCLKOUT period.

The data is now captured on the rising and propagated on the falling edges of the SSPCLKOUT signal.

In the case of a single word transmission, after all bits of the data word have been transferred, the SSPFSSOUT line is returned to its idle HIGH state one SSPCLKOUT period after the last bit has been captured.

However, in the case of continuous back-to-back transmissions, the SSPFSSOUT signal must be pulsed HIGH between each data word transfer. This is because the slave select pin freezes the data in its serial peripheral register and does not permit it to be altered if the SPH bit is logic zero. Therefore, the master device must raise the SSPFSSIN pin of the slave device between each data transfer to enable the serial peripheral data write. On completion of the continuous transfer, the SSPFSSOUT pin is returned to its idle state one SSPCLKOUT period after the last bit has been captured.

4.4.3.11. Motorola SPI Format with SPO=0, SPH=1

Figure 92 shows the transfer signal sequence for Motorola SPI format with SPO=0, SPH=1, and it covers both single and continuous transfers.

Figure 92. Motorola SPI frame format with SPO=0 and SPH=1, single and continuous transfers

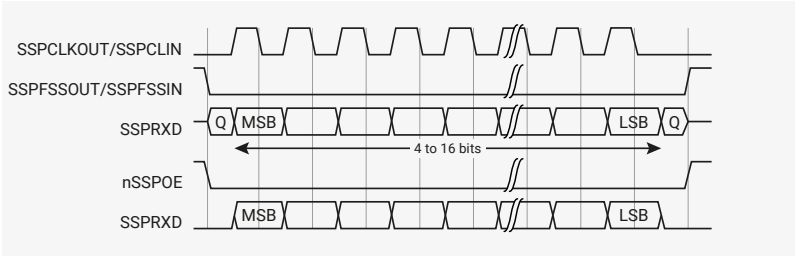

In this configuration, during idle periods:

- the SSPCLKOUT signal is forced LOW
- The SSPFSSOUT signal is forced HIGH
- the transmit data line SSPTXD is arbitrarily forced LOW
- the nSSPOE pad enable signal is forced HIGH (note this is not connected to the pad in RP2040)
- when the PrimeCell SSP is configured as a master, the nSSPCTLOE line is driven LOW, enabling the SSPCLKOUT pad, active-LOW enable
- when the PrimeCell SSP is configured as a slave, the nSSPCTLOE line is driven HIGH, disabling the SSPCLKOUT pad, active-LOW enable.

If the PrimeCell SSP is enabled, and there is valid data within the transmit FIFO, the start of transmission is signified by the SSPFSSOUT master signal being driven LOW. The nSSPOE line is driven LOW, enabling the master SSPTXD output pad. After an additional one half SSPCLKOUT period, both master and slave valid data is enabled onto their respective transmission lines. At the same time, the SSPCLKOUT is enabled with a rising edge transition.

Data is then captured on the falling edges and propagated on the rising edges of the SSPCLKOUT signal.

In the case of a single word transfer, after all bits have been transferred, the SSPFSSOUT line is returned to its idle HIGH state one SSPCLKOUT period after the last bit has been captured. For continuous back-to-back transfers, the SSPFSSOUT pin is held LOW between successive data words and termination is the same as that of the single word transfer.

4.4.3.12. Motorola SPI Format with SPO=1, SPH=0

Figure 93 and Figure 94 show single and continuous transmission signal sequences for Motorola SPI format with SPO=1, SPH=0.

Figure 93 shows a single transmission signal sequence for Motorola SPI format with SPO=1, SPH=0.

Figure 93. Motorola SPI frame format, single transfer, with SPO=1 and SPH=0

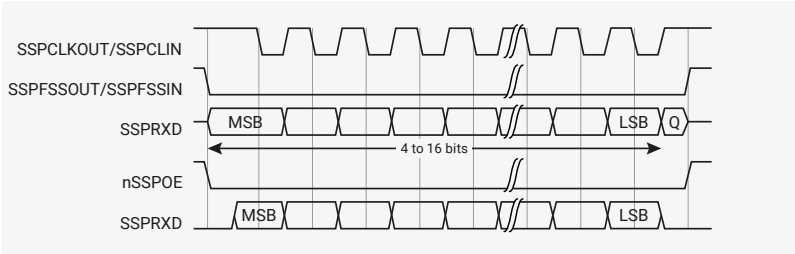

Figure 94 shows a continuous transmission signal sequence for Motorola SPI format with SPO=1, SPH=0.

NOTE

In Figure 93, Q is an undefined signal.

Figure 94. Motorola SPI frame format, continuous transfer, with SPO=1 and SPH=0

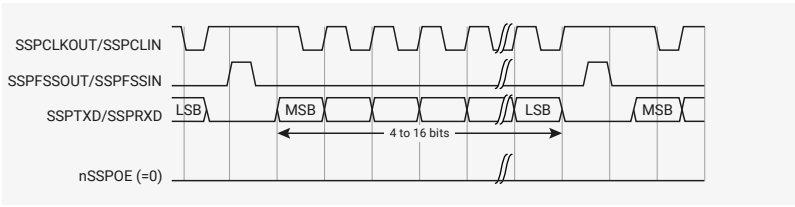

In this configuration, during idle periods:

- the SSPCLKOUT signal is forced HIGH
- the SSPFSSOUT signal is forced HIGH
- the transmit data line SSPTXD is arbitrarily forced LOW
- the nSSPOE pad enable signal is forced HIGH (note this is not connected to the pad in RP2040)
- when the PrimeCell SSP is configured as a master, the nSSPCTLOE line is driven LOW, enabling the SSPCLKOUT pad, active-LOW enable
- when the PrimeCell SSP is configured as a slave, the nSSPCTLOE line is driven HIGH, disabling the SSPCLKOUT pad, active-LOW enable.

If the PrimeCell SSP is enabled, and there is valid data within the transmit FIFO, the start of transmission is signified by the SSPFSSOUT master signal being driven LOW, and this causes slave data to be immediately transferred onto the SSPRXD line of the master. The nSSPOE line is driven LOW, enabling the master SSPTXD output pad.

One half period later, valid master data is transferred to the SSPTXD line. Now that both the master and slave data have been set, the SSPCLKOUT master clock pin becomes LOW after one additional half SSPCLKOUT period. This means that data is captured on the falling edges and be propagated on the rising edges of the SSPCLKOUT signal.

In the case of a single word transmission, after all bits of the data word are transferred, the SSPFSSOUT line is returned to its idle HIGH state one SSPCLKOUT period after the last bit has been captured.

However, in the case of continuous back-to-back transmissions, the SSPFSSOUT signal must be pulsed HIGH between each data word transfer. This is because the slave select pin freezes the data in its serial peripheral register and does not permit it to be altered if the SPH bit is logic zero. Therefore, the master device must raise the SSPFSSIN pin of the slave device between each data transfer to enable the serial peripheral data write. On completion of the continuous transfer, the SSPFSSOUT pin is returned to its idle state one SSPCLKOUT period after the last bit has been captured.

4.4.3.13. Motorola SPI Format with SPO=1, SPH=1

Figure 95 shows the transfer signal sequence for Motorola SPI format with SPO=1, SPH=1, and it covers both single and continuous transfers.

Figure 95. Motorola SPI frame format with SPO=1 and SPH=1, single and continuous transfers

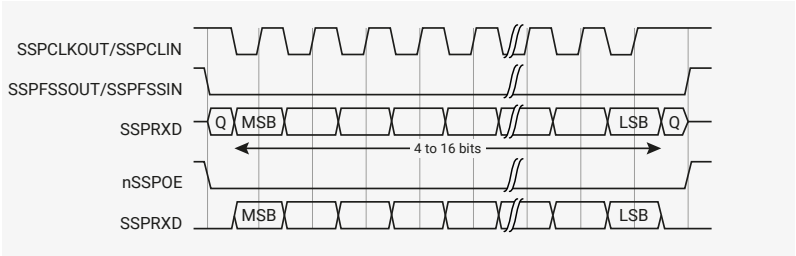

NOTE

In Figure 95, Q is an undefined signal.

In this configuration, during idle periods:

- the SSPCLKOUT signal is forced HIGH
- the SSPFSSOUT signal is forced HIGH
- the transmit data line SSPTXD is arbitrarily forced LOW
- the nSSPOE pad enable signal is forced HIGH (note this is not connected to the pad in RP2040)
- when the PrimeCell SSP is configured as a master, the nSSPCTLOE line is driven LOW, enabling the SSPCLKOUT pad, active-LOW enable
- when the PrimeCell SSP is configured as a slave, the nSSPCTLOE line is driven HIGH, disabling the SSPCLKOUT pad, active-LOW enable.

If the PrimeCell SSP is enabled, and there is valid data within the transmit FIFO, the start of transmission is signified by the SSPFSSOUT master signal being driven LOW. The nSSPOE line is driven LOW, enabling the master SSPTXD output pad. After an additional one half SSPCLKOUT period, both master and slave data are enabled onto their respective transmission lines. At the same time, the SSPCLKOUT is enabled with a falling edge transition. Data is then captured on the rising edges and propagated on the falling edges of the SSPCLKOUT signal.

After all bits have been transferred, in the case of a single word transmission, the SSPFSSOUT line is returned to its idle HIGH state one SSPCLKOUT period after the last bit has been captured.

For continuous back-to-back transmissions, the SSPFSSOUT pin remains in its active-LOW state, until the final bit of the last word has been captured, and then returns to its idle state as the previous section describes.

For continuous back-to-back transfers, the SSPFSSOUT pin is held LOW between successive data words and termination is the same as that of the single word transfer.

4.4.3.14. National Semiconductor Microwire frame format

Figure 96 shows the National Semiconductor Microwire frame format for a single frame. Figure 97 shows the same format when back to back frames are transmitted.

Figure 96. Microwire frame format, single transfer

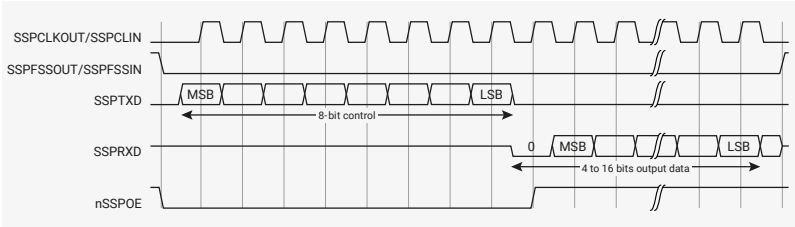

Microwire format is very similar to SPI format, except that transmission is half-duplex instead of full-duplex, using a master-slave message passing technique. Each serial transmission begins with an 8-bit control word that is transmitted from the PrimeCell SSP to the off-chip slave device. During this transmission, the PrimeCell SSP receives no incoming data. After the message has been sent, the off-chip slave decodes it and, after waiting one serial clock after the last bit of the 8-bit control message has been sent, responds with the required data. The returned data is 4 to 16 bits in length, making the total frame length in the range 13-25 bits.

In this configuration, during idle periods:

- SSPCLKOUT is forced LOW
- SSPFSSOUT is forced HIGH
- the transmit data line, SSPTXD, is arbitrarily forced LOW
- the nSSPOE pad enable signal is forced HIGH (note this is not connected to the pad in RP2040)

A transmission is triggered by writing a control byte to the transmit FIFO. The falling edge of SSPFSSOUT causes the value contained in the bottom entry of the transmit FIFO to be transferred to the serial shift register of the transmit logic, and the MSB of the 8-bit control frame to be shifted out onto the SSPTXD pin. SSPFSSOUT remains LOW for the duration of the frame transmission. The SSPRXD pin remains tristated during this transmission.

The off-chip serial slave device latches each control bit into its serial shifter on the rising edge of each SSPCLKOUT. After the last bit is latched by the slave device, the control byte is decoded during a one clock wait-state, and the slave responds by transmitting data back to the PrimeCell SSP. Each bit is driven onto SSPRXD line on the falling edge of SSPCLKOUT. The PrimeCell SSP in turn latches each bit on the rising edge of SSPCLKOUT. At the end of the frame, for single transfers, the SSPFSSOUT signal is pulled HIGH one clock period after the last bit has been latched in the receive serial shifter, that causes the data to be transferred to the receive FIFO.

NOTE

The off-chip slave device can tristate the receive line either on the falling edge of SSPCLKOUT after the LSB has been latched by the receive shifter, or when the SSPFSSOUT pin goes HIGH.

For continuous transfers, data transmission begins and ends in the same manner as a single transfer. However, the SSPFSSOUT line is continuously asserted, held LOW, and transmission of data occurs back-to-back. The control byte of the next frame follows directly after the LSB of the received data from the current frame. Each of the received values is transferred from the receive shifter on the falling edge SSPCLKOUT, after the LSB of the frame has been latched into the PrimeCell SSP.

Figure 97 shows the National Semiconductor Microwire frame format when back-to-back frames are transmitted.

Figure 97. Microwire frame format, continuous transfers

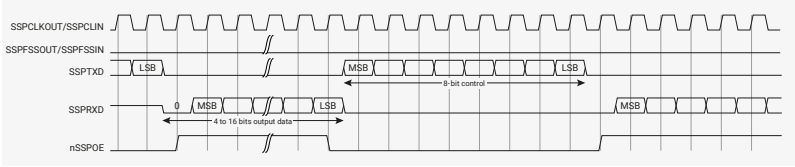

In Microwire mode, the PrimeCell SSP slave samples the first bit of receive data on the rising edge of SSPCLKIN after SSPFSSIN has gone LOW. Masters that drive a free-running SSPCKLIN must ensure that the SSPFSSIN signal has sufficient setup and hold margins with respect to the rising edge of SSPCLKIN.

Figure 98 shows these setup and hold time requirements.

With respect to the SSPCLKIN rising edge on which the first bit of receive data is to be sampled by the PrimeCell SSP slave, SSPFSSIN must have a setup of at least two times the period of SSPCLK on which the PrimeCell SSP operates.

With respect to the SSPCLKIN rising edge previous to this edge, SSPFSSIN must have a hold of at least one SSPCLK period.

Figure 98. Microwire frame format, SSPFSSIN input setup and hold requirements

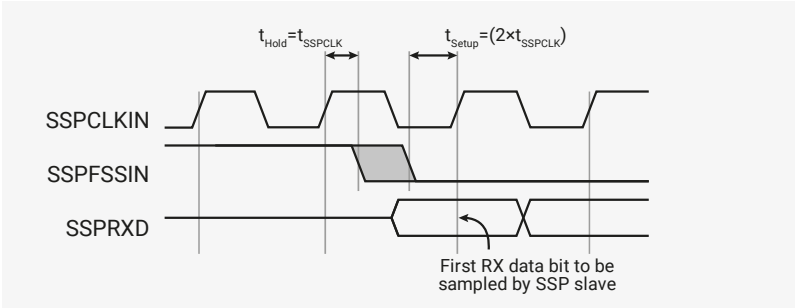

4.4.3.15. Examples of master and slave configurations

Figure 99, Figure 100, and Figure 101 shows how you can connect the PrimeCell SSP (PL022) peripheral to other synchronous serial peripherals, when it is configured as a master or a slave.

NOTE

The SSP (PL022) does not support dynamic switching between master and slave in a system. Each instance is configured and connected either as a master or slave.

Figure 99 shows the PrimeCell SSP (PL022) instanced twice, as a single master and one slave. The master can broadcast to the slave through the master SSPTXD line. In response, the slave drives its nSSPOE signal HIGH, enabling its SSPTXD data onto the SSPRXD line of the master.

Figure 99. PrimeCell SSP master coupled to a PL022 slave

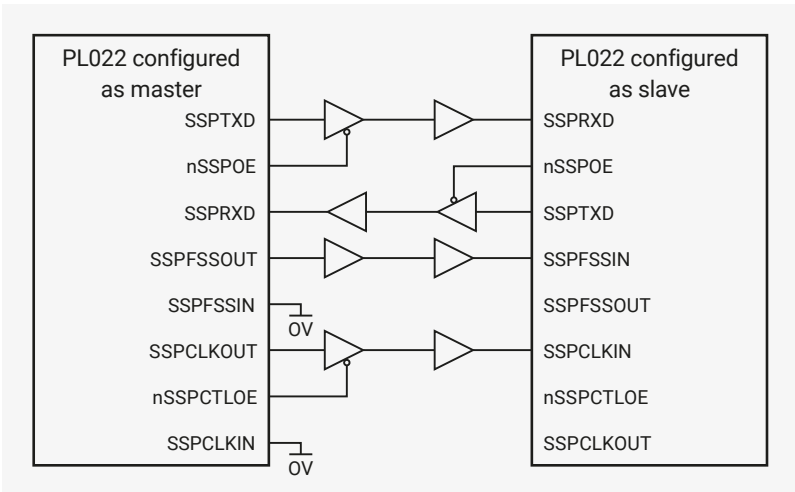

Figure 100 shows how an PrimeCell SSP (PL022), configured as master, interfaces to a Motorola SPI slave. The SPI Slave Select (SS) signal is permanently tied LOW and configures it as a slave. Similar to the above operation, the master can broadcast to the slave through the master PrimeCell SSP SSPTXD line. In response, the slave drives its SPI MISO port onto the SSPRXD line of the master.

Figure 100. PrimeCell SSP master coupled to an SPI slave

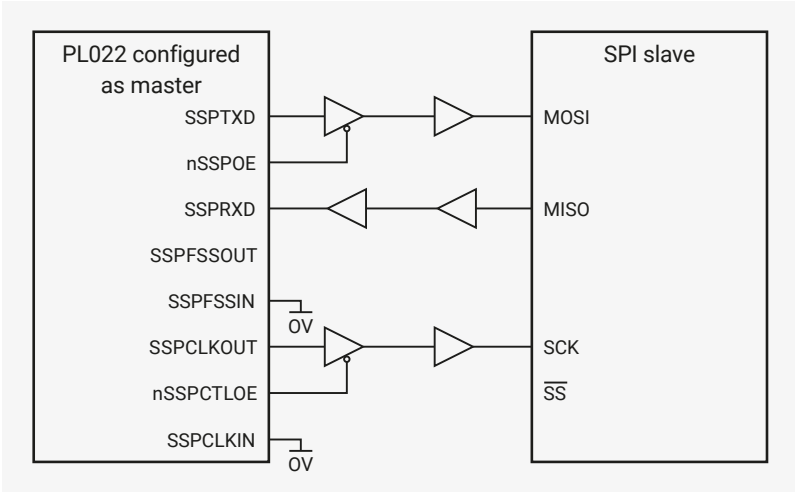

Figure 101 shows a Motorola SPI configured as a master and interfaced to an instance of a PrimeCell SSP (PL022) configured as a slave. In this case, the slave Select Signal (SS) is permanently tied HIGH to configure it as a master. The master can broadcast to the slave through the master SPI MOSI line and in response, the slave drives its nSSPOE signal LOW. This enables its SSPTXD data onto the MISO line of the master.

Figure 101. SPI master coupled to a PrimeCell SSP slave

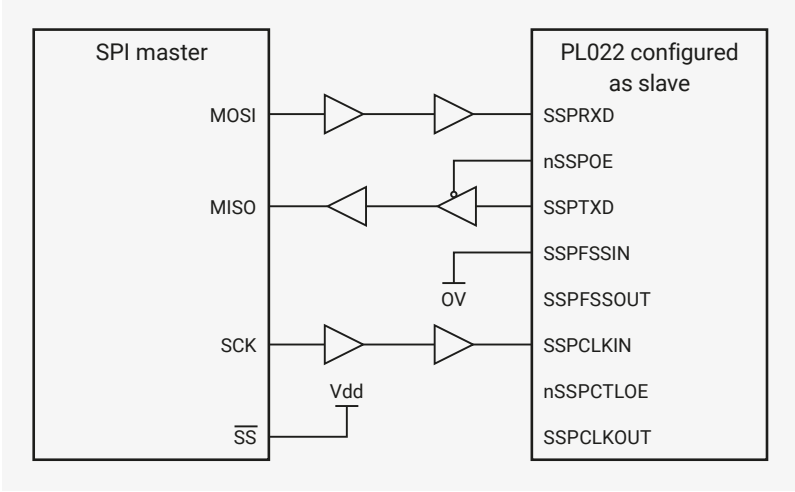

4.4.3.16. PrimeCell DMA interface

The PrimeCell SSP provides an interface to connect to the DMA controller. The PrimeCell SSP DMA control register, SSPDMACR controls the DMA operation of the PrimeCell SSP.

The DMA interface includes the following signals, for receive:

SSPRXDMASREQ

Single-character DMA transfer request, asserted by the SSP. This signal is asserted when the receive FIFO contains at least one character.

SSPRXDMABREQ

Burst DMA transfer request, asserted by the SSP. This signal is asserted when the receive FIFO contains four or more characters.

SSPRXDMACLR

DMA request clear, asserted by the DMA controller to clear the receive request signals. If DMA burst transfer is requested, the clear signal is asserted during the transfer of the last data in the burst.

The DMA interface includes the following signals, for transmit:

SSPTXDMASREQ

Single-character DMA transfer request, asserted by the SSP. This signal is asserted when there is at least one empty location in the transmit FIFO.

SSPTXDMABREQ

Burst DMA transfer request, asserted by the SSP. This signal is asserted when the transmit FIFO contains four characters or fewer.

SSPTXDMACLR

DMA request clear, asserted by the DMA controller, to clear the transmit request signals. If a DMA burst transfer is requested, the clear signal is asserted during the transfer of the last data in the burst.

The burst transfer and single transfer request signals are not mutually exclusive. They can both be asserted at the same time. For example, when there is more data than the watermark level of four in the receive FIFO, the burst transfer request, and the single transfer request, are asserted. When the amount of data left in the receive FIFO is less than the watermark level, the single request only is asserted. This is useful for situations where the number of characters left to be received in the stream is less than a burst.

For example, if 19 characters must be received, the DMA controller then transfers four bursts of four characters, and three single transfers to complete the stream.

NOTE

For the remaining three characters, the PrimeCell SSP does not assert the burst request.

Each request signal remains asserted until the relevant DMA clear signal is asserted. After the request clear signal is deasserted, a request signal can become active again, depending on the conditions that previous sections describe. All request signals are deasserted if the PrimeCell SSP is disabled, or the DMA enable signal is cleared.

Table 495 shows the trigger points for DMABREQ, for both the transmit and receive FIFOs.

Table 495. DMA trigger points for the transmit and receive FIFOs

Burst length		
Watermark level	**Transmit, number of empty locations**	**Receive, number of filled locations**
1/2	4	4

Figure 102 shows the timing diagram for both a single transfer request, and a burst transfer request, with the appropriate DMA clear signal. The signals are all synchronous to PCLK.

Figure 102. DMA transfer waveforms

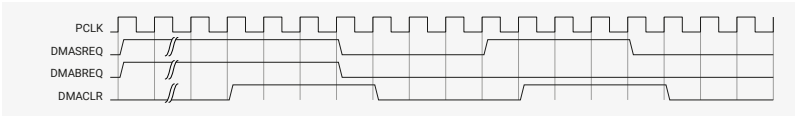

4.4.4. List of Registers

The SPI0 and SPI1 registers start at base addresses of `0x4003c000` and `0x40040000` respectively (defined as SPI0_BASE and SPI1_BASE in SDK).

Table 496. List of SPI registers

Offset	Name	Info
0x000	SSPCR0	Control register 0, SSPCR0 on page 3-4
0x004	SSPCR1	Control register 1, SSPCR1 on page 3-5
0x008	SSPDR	Data register, SSPDR on page 3-6
0x00c	SSPSR	Status register, SSPSR on page 3-7
0x010	SSPCPSR	Clock prescale register, SSPCPSR on page 3-8

Offset	Name	Info
0x014	SSPIMSC	Interrupt mask set or clear register, SSPIMSC on page 3-9
0x018	SSPRIS	Raw interrupt status register, SSPRIS on page 3-10
0x01c	SSPMIS	Masked interrupt status register, SSPMIS on page 3-11
0x020	SSPICR	Interrupt clear register, SSPICR on page 3-11
0x024	SSPDMACR	DMA control register, SSPDMACR on page 3-12
0xfe0	SSPPERIPHID0	Peripheral identification registers, SSPPeriphID0-3 on page 3-13
0xfe4	SSPPERIPHID1	Peripheral identification registers, SSPPeriphID0-3 on page 3-13
0xfe8	SSPPERIPHID2	Peripheral identification registers, SSPPeriphID0-3 on page 3-13
0xfec	SSPPERIPHID3	Peripheral identification registers, SSPPeriphID0-3 on page 3-13
0xff0	SSPPCELLID0	PrimeCell identification registers, SSPPCellID0-3 on page 3-16
0xff4	SSPPCELLID1	PrimeCell identification registers, SSPPCellID0-3 on page 3-16
0xff8	SSPPCELLID2	PrimeCell identification registers, SSPPCellID0-3 on page 3-16
0xffc	SSPPCELLID3	PrimeCell identification registers, SSPPCellID0-3 on page 3-16

SPI: SSPCR0 Register

Offset: 0x000

Description

Control register 0, SSPCR0 on page 3-4

Table 497. SSPCR0 Register

Bits	Description	Type	Reset
31:16	Reserved.	-	-
15:8	**SCR**: Serial clock rate. The value SCR is used to generate the transmit and receive bit rate of the PrimeCell SSP. The bit rate is: F SSPCLK CPSDVSR x (1+SCR) where CPSDVSR is an even value from 2-254, programmed through the SSPCPSR register and SCR is a value from 0-255.	RW	0x00
7	**SPH**: SSPCLKOUT phase, applicable to Motorola SPI frame format only. See Motorola SPI frame format on page 2-10.	RW	0x0
6	**SPO**: SSPCLKOUT polarity, applicable to Motorola SPI frame format only. See Motorola SPI frame format on page 2-10.	RW	0x0
5:4	**FRF**: Frame format: 00 Motorola SPI frame format. 01 TI synchronous serial frame format. 10 National Microwire frame format. 11 Reserved, undefined operation.	RW	0x0
3:0	**DSS**: Data Size Select: 0000 Reserved, undefined operation. 0001 Reserved, undefined operation. 0010 Reserved, undefined operation. 0011 4-bit data. 0100 5-bit data. 0101 6-bit data. 0110 7-bit data. 0111 8-bit data. 1000 9-bit data. 1001 10-bit data. 1010 11-bit data. 1011 12-bit data. 1100 13-bit data. 1101 14-bit data. 1110 15-bit data. 1111 16-bit data.	RW	0x0

SPI: SSPCR1 Register

Offset: 0x004

Description

Control register 1, SSPCR1 on page 3-5

Table 498. SSPCR1 Register

Bits	Description	Type	Reset
31:4	Reserved.	-	-
3	**SOD**: Slave-mode output disable. This bit is relevant only in the slave mode, MS=1. In multiple-slave systems, it is possible for an PrimeCell SSP master to broadcast a message to all slaves in the system while ensuring that only one slave drives data onto its serial output line. In such systems the RXD lines from multiple slaves could be tied together. To operate in such systems, the SOD bit can be set if the PrimeCell SSP slave is not supposed to drive the SSPTXD line: 0 SSP can drive the SSPTXD output in slave mode. 1 SSP must not drive the SSPTXD output in slave mode.	RW	0x0
2	**MS**: Master or slave mode select. This bit can be modified only when the PrimeCell SSP is disabled, SSE=0: 0 Device configured as master, default. 1 Device configured as slave.	RW	0x0
1	**SSE**: Synchronous serial port enable: 0 SSP operation disabled. 1 SSP operation enabled.	RW	0x0
0	**LBM**: Loop back mode: 0 Normal serial port operation enabled. 1 Output of transmit serial shifter is connected to input of receive serial shifter internally.	RW	0x0

SPI: SSPDR Register

Offset: 0x008

Description

Data register, SSPDR on page 3-6

Table 499. SSPDR Register

Bits	Description	Type	Reset
31:16	Reserved.	-	-
15:0	**DATA**: Transmit/Receive FIFO: Read Receive FIFO. Write Transmit FIFO. You must right-justify data when the PrimeCell SSP is programmed for a data size that is less than 16 bits. Unused bits at the top are ignored by transmit logic. The receive logic automatically right-justifies.	RWF	-

SPI: SSPSR Register

Offset: 0x00c

Description

Status register, SSPSR on page 3-7

Table 500. SSPSR Register

Bits	Description	Type	Reset
31:5	Reserved.	-	-
4	**BSY**: PrimeCell SSP busy flag, RO: 0 SSP is idle. 1 SSP is currently transmitting and/or receiving a frame or the transmit FIFO is not empty.	RO	0x0
3	**RFF**: Receive FIFO full, RO: 0 Receive FIFO is not full. 1 Receive FIFO is full.	RO	0x0
2	**RNE**: Receive FIFO not empty, RO: 0 Receive FIFO is empty. 1 Receive FIFO is not empty.	RO	0x0
1	**TNF**: Transmit FIFO not full, RO: 0 Transmit FIFO is full. 1 Transmit FIFO is not full.	RO	0x1
0	**TFE**: Transmit FIFO empty, RO: 0 Transmit FIFO is not empty. 1 Transmit FIFO is empty.	RO	0x1

SPI: SSPCPSR Register

Offset: 0x010

Description

Clock prescale register, SSPCPSR on page 3-8

Table 501. SSPCPSR Register

Bits	Description	Type	Reset
31:8	Reserved.	-	-
7:0	**CPSDVSR**: Clock prescale divisor. Must be an even number from 2-254, depending on the frequency of SSPCLK. The least significant bit always returns zero on reads.	RW	0x00

SPI: SSPIMSC Register

Offset: 0x014

Description

Interrupt mask set or clear register, SSPIMSC on page 3-9

Table 502. SSPIMSC Register

Bits	Description	Type	Reset
31:4	Reserved.	-	-
3	**TXIM**: Transmit FIFO interrupt mask: 0 Transmit FIFO half empty or less condition interrupt is masked. 1 Transmit FIFO half empty or less condition interrupt is not masked.	RW	0x0
2	**RXIM**: Receive FIFO interrupt mask: 0 Receive FIFO half full or less condition interrupt is masked. 1 Receive FIFO half full or less condition interrupt is not masked.	RW	0x0
1	**RTIM**: Receive timeout interrupt mask: 0 Receive FIFO not empty and no read prior to timeout period interrupt is masked. 1 Receive FIFO not empty and no read prior to timeout period interrupt is not masked.	RW	0x0
0	**RORIM**: Receive overrun interrupt mask: 0 Receive FIFO written to while full condition interrupt is masked. 1 Receive FIFO written to while full condition interrupt is not masked.	RW	0x0

SPI: SSPRIS Register

Offset: 0x018

Description

Raw interrupt status register, SSPRIS on page 3-10

Table 503. SSPRIS Register

Bits	Description	Type	Reset
31:4	Reserved.	-	-
3	**TXRIS**: Gives the raw interrupt state, prior to masking, of the SSPTXINTR interrupt	RO	0x1
2	**RXRIS**: Gives the raw interrupt state, prior to masking, of the SSPRXINTR interrupt	RO	0x0
1	**RTRIS**: Gives the raw interrupt state, prior to masking, of the SSPRTINTR interrupt	RO	0x0

Bits	Description	Type	Reset
0	**RORRIS**: Gives the raw interrupt state, prior to masking, of the SSPRORINTR interrupt	RO	0x0

SPI: SSPMIS Register

Offset: 0x01c

Description

Masked interrupt status register, SSPMIS on page 3-11

Table 504. SSPMIS Register

Bits	Description	Type	Reset
31:4	Reserved.	-	-
3	**TXMIS**: Gives the transmit FIFO masked interrupt state, after masking, of the SSPTXINTR interrupt	RO	0x0
2	**RXMIS**: Gives the receive FIFO masked interrupt state, after masking, of the SSPRXINTR interrupt	RO	0x0
1	**RTMIS**: Gives the receive timeout masked interrupt state, after masking, of the SSPRTINTR interrupt	RO	0x0
0	**RORMIS**: Gives the receive over run masked interrupt status, after masking, of the SSPRORINTR interrupt	RO	0x0

SPI: SSPICR Register

Offset: 0x020

Description

Interrupt clear register, SSPICR on page 3-11

Table 505. SSPICR Register

Bits	Description	Type	Reset
31:2	Reserved.	-	-
1	**RTIC**: Clears the SSPRTINTR interrupt	WC	0x0
0	**RORIC**: Clears the SSPRORINTR interrupt	WC	0x0

SPI: SSPDMACR Register

Offset: 0x024

Description

DMA control register, SSPDMACR on page 3-12

Table 506. SSPDMACR Register

Bits	Description	Type	Reset
31:2	Reserved.	-	-
1	**TXDMAE**: Transmit DMA Enable. If this bit is set to 1, DMA for the transmit FIFO is enabled.	RW	0x0
0	**RXDMAE**: Receive DMA Enable. If this bit is set to 1, DMA for the receive FIFO is enabled.	RW	0x0

SPI: SSPPERIPHID0 Register

Offset: 0xfe0

Description

Peripheral identification registers, SSPPeriphID0-3 on page 3-13

Table 507. SSPPERIPHID0 Register

Bits	Description	Type	Reset
31:8	Reserved.	-	-
7:0	**PARTNUMBER0**: These bits read back as 0x22	RO	0x22

SPI: SSPPERIPHID1 Register

Offset: 0xfe4

Description

Peripheral identification registers, SSPPeriphID0-3 on page 3-13

Table 508. SSPPERIPHID1 Register

Bits	Description	Type	Reset
31:8	Reserved.	-	-
7:4	**DESIGNER0**: These bits read back as 0x1	RO	0x1
3:0	**PARTNUMBER1**: These bits read back as 0x0	RO	0x0

SPI: SSPPERIPHID2 Register

Offset: 0xfe8

Description

Peripheral identification registers, SSPPeriphID0-3 on page 3-13

Table 509. SSPPERIPHID2 Register

Bits	Description	Type	Reset
31:8	Reserved.	-	-
7:4	**REVISION**: These bits return the peripheral revision	RO	0x3
3:0	**DESIGNER1**: These bits read back as 0x4	RO	0x4

SPI: SSPPERIPHID3 Register

Offset: 0xfec

Description

Peripheral identification registers, SSPPeriphID0-3 on page 3-13

Table 510. SSPPERIPHID3 Register

Bits	Description	Type	Reset
31:8	Reserved.	-	-
7:0	**CONFIGURATION**: These bits read back as 0x00	RO	0x00

SPI: SSPPCELLID0 Register

Offset: 0xff0

Description

PrimeCell identification registers, SSPPCellID0-3 on page 3-16

Table 511. SSPPCELLID0 Register

Bits	Description	Type	Reset
31:8	Reserved.	-	-
7:0	**SSPPCELLID0**: These bits read back as 0x0D	RO	0x0d

SPI: SSPPCELLID1 Register

Offset: 0xff4

Description

PrimeCell identification registers, SSPPCellID0-3 on page 3-16

Table 512. SSPPCELLID1 Register

Bits	Description	Type	Reset
31:8	Reserved.	-	-
7:0	**SSPPCELLID1**: These bits read back as 0xF0	RO	0xf0

SPI: SSPPCELLID2 Register

Offset: 0xff8

Description

PrimeCell identification registers, SSPPCellID0-3 on page 3-16

Table 513. SSPPCELLID2 Register

Bits	Description	Type	Reset
31:8	Reserved.	-	-
7:0	**SSPPCELLID2**: These bits read back as 0x05	RO	0x05

SPI: SSPPCELLID3 Register

Offset: 0xffc

Description

PrimeCell identification registers, SSPPCellID0-3 on page 3-16

Table 514. SSPPCELLID3 Register

Bits	Description	Type	Reset
31:8	Reserved.	-	-
7:0	**SSPPCELLID3**: These bits read back as 0xB1	RO	0xb1

4.5. PWM

4.5.1. Overview

Pulse width modulation (PWM) is a scheme where a digital signal provides a smoothly varying average voltage. This is achieved with positive pulses of some controlled width, at regular intervals. The fraction of time spent high is known as the duty cycle. This may be used to approximate an analog output, or control switchmode power electronics.

The RP2040 PWM block has 8 identical slices. Each slice can drive two PWM output signals, or measure the frequency or duty cycle of an input signal. This gives a total of up to 16 controllable PWM outputs. All 30 GPIO pins can be driven by the PWM block.

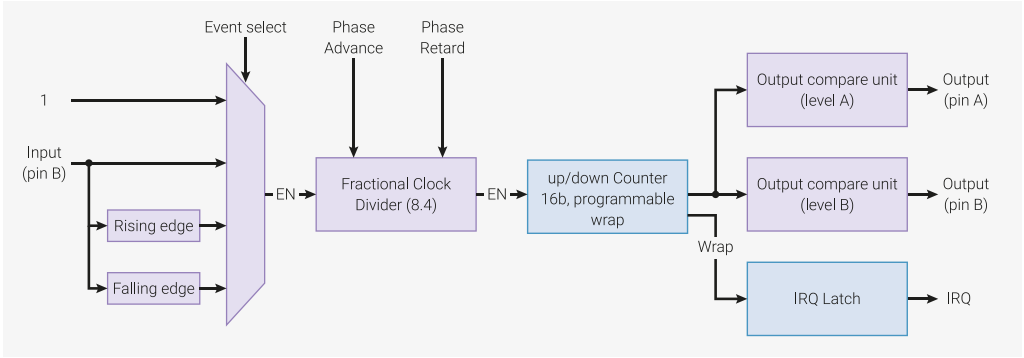

Figure 103. A single PWM slice. A 16-bit counter counts from 0 up to some programmed value, and then wraps to zero, or counts back down again, depending on PWM mode. The A and B outputs transition high and low based on the current count value and the preprogrammed A and B thresholds. The counter advances based on a number of events: it may be free-running, or gated by level or edge of an input signal on the B pin. A fractional divider slows the overall count rate for finer control of output frequency.

Each PWM slice is equipped with the following:

- 16-bit counter
- 8.4 fractional clock divider
- Two independent output channels, duty cycle from 0% to 100% **inclusive**
- Dual slope and trailing edge modulation
- Edge-sensitive input mode for frequency measurement
- Level-sensitive input mode for duty cycle measurement
- Configurable counter wrap value
  - Wrap and level registers are double buffered and can be changed race-free while PWM is running
- Interrupt request and DMA request on counter wrap
- Phase can be precisely advanced or retarded while running (increments of one count)

Slices can be enabled or disabled simultaneously via a single, global control register. The slices then run in perfect lockstep, so that more complex power circuitry can be switched by the outputs of multiple slices.

4.5.2. Programmer's Model

All 30 GPIO pins on RP2040 can be used for PWM:

Table 515. Mapping of PWM channels to GPIO pins on RP2040. This is also shown in the main GPIO function table, Table 279

GPIO	0	1	2	3	4	5	6	7	8	9	10	11	12	13	14	15
PWM Channel	0A	0B	1A	1B	2A	2B	3A	3B	4A	4B	5A	5B	6A	6B	7A	7B
GPIO	16	17	18	19	20	21	22	23	24	25	26	27	28	29		
PWM Channel	0A	0B	1A	1B	2A	2B	3A	3B	4A	4B	5A	5B	6A	6B		

- The 16 PWM channels (8 2-channel slices) appear on GPIO0 to GPIO15, in the order PWM0 A, PWM0 B, PWM1 A…
- This repeats for GPIO16 to GPIO29. GPIO16 is PWM0 A, GPIO17 is PWM0 B, so on up to PWM6 B on GPIO29
- The same PWM output can be selected on two GPIO pins; the same signal will appear on each GPIO.
- If a PWM B pin is used as an input, and is selected on multiple GPIO pins, then the PWM slice will see the logical OR of those two GPIO inputs

4.5.2.1. Pulse Width Modulation

The PWM hardware functions by continuously comparing the input value to a free-running counter. This produces a toggling output where the amount of time spent at the high output level is proportional to the input value. The fraction of time spent at the high signal level is known as the duty cycle of the signal.

The counting period is controlled by the TOP register, with a maximum possible period of 65536 cycles, as the counter and TOP are 16 bits in size. The input values are configured via the CC register.

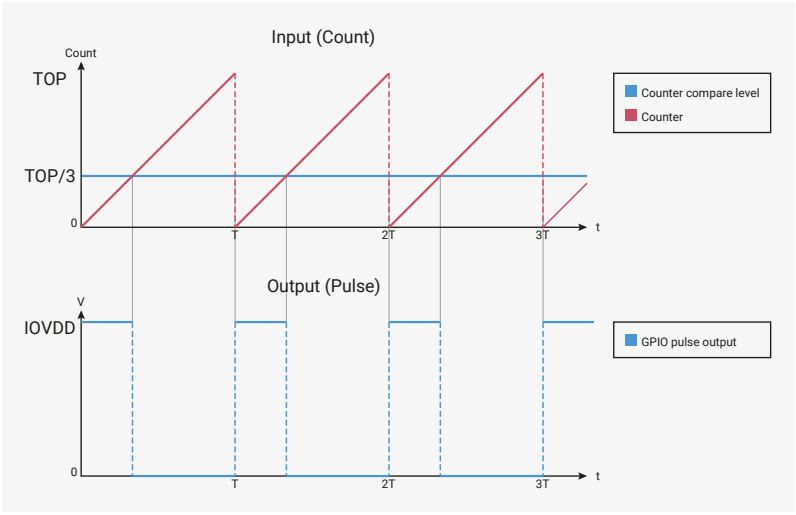

*Figure 104. The counter repeatedly counts from 0 to TOP, forming a sawtooth shape. The counter is continuously compared with some input value. When the input value is higher than the counter, the output is driven high. Otherwise, the output is low. The output period T is defined by the TOP value of the counter, and how fast the counter is configured to count. The **average** output voltage, as a fraction of the IO power supply, is the input value divided by the counter period (TOP + 1)*

This example shows the counting period and the A and B counter compare levels being configured on one of RP2040's PWM slices.

Pico Examples: https://github.com/raspberrypi/pico-examples/blob/master/pwm/hello_pwm/hello_pwm.c Lines 14 - 29

```
14    // Tell GPIO 0 and 1 they are allocated to the PWM
15    gpio_set_function(0, GPIO_FUNC_PWM);
16    gpio_set_function(1, GPIO_FUNC_PWM);
17
18    // Find out which PWM slice is connected to GPIO 0 (it's slice 0)
19    uint slice_num = pwm_gpio_to_slice_num(0);
20
21    // Set period of 4 cycles (0 to 3 inclusive)
22    pwm_set_wrap(slice_num, 3);
23    // Set channel A output high for one cycle before dropping
24    pwm_set_chan_level(slice_num, PWM_CHAN_A, 1);
25    // Set initial B output high for three cycles before dropping
26    pwm_set_chan_level(slice_num, PWM_CHAN_B, 3);
27    // Set the PWM running
28    pwm_set_enabled(slice_num, true);
```

Figure 105 shows how the PWM hardware operates once it has been configured in this way.

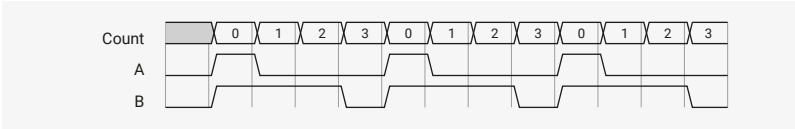

Figure 105. The slice counts repeatedly from 0 to 3, which is configured as the TOP value. The output waves therefore have a period of 4. Output A is high for 1 cycle in 4, so the average output voltage is 1/4 of the IO supply voltage. Output B is high for 3 cycles in every 4. Note the rising edges of A and B are always aligned.

The default behaviour of a PWM slice is to count upward until the value of the `TOP` register is reached, and then immediately wrap to 0. PWM slices also offer a phase-correct mode, enabled by setting `CSR_PH_CORRECT` to 1, where the counter starts to count downward after reaching `TOP`, until it reaches 0 again.

It is called phase-correct mode because the pulse is always centred on the same point, no matter the duty cycle. In other words, its phase is not a function of duty cycle. The output frequency is halved when phase-correct mode is enabled.

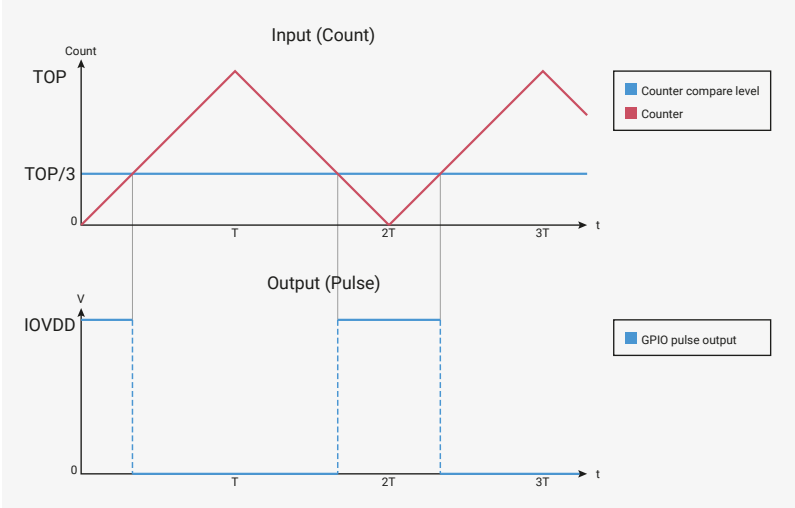

Figure 106. In phase-correct mode, the counter counts back down from TOP to 0 once it reaches TOP.

4.5.2.2. 0% and 100% Duty Cycle

The RP2040 PWM can produce toggle-free 0% and 100% duty cycle output.

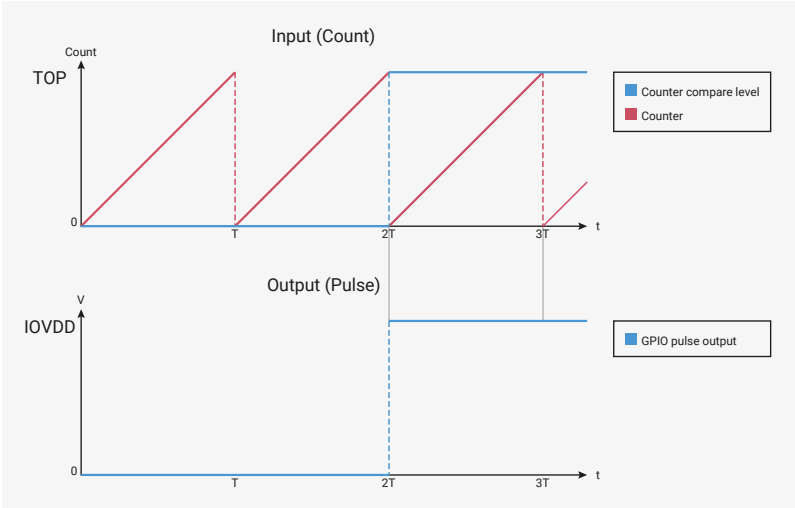

Figure 107. Glitch-free 0% duty cycle output for CC = 0, and glitch-free 100% duty cycle output for CC = TOP + 1

A `CC` value of 0 will produce a 0% output, i.e. the output signal is always low. A `CC` value of `TOP` + 1 (i.e. equal to the period, in non-phase-correct mode) will produce a 100% output. For example, if `TOP` is programmed to 254, the counter will have a period of 255 cycles, and `CC` values in the range of 0 to 255 inclusive will produce duty cycles in the range 0% to 100% inclusive.

Glitch-free output at 0% and 100% is important e.g. to avoid switching losses when a MOSFET is controlled at its minimum and maximum current levels.

4.5.2.3. Double Buffering

Figure 108 shows how a change in input value will produce a change in output duty cycle. This can be used to approximate some analog waveform such as a sine wave.

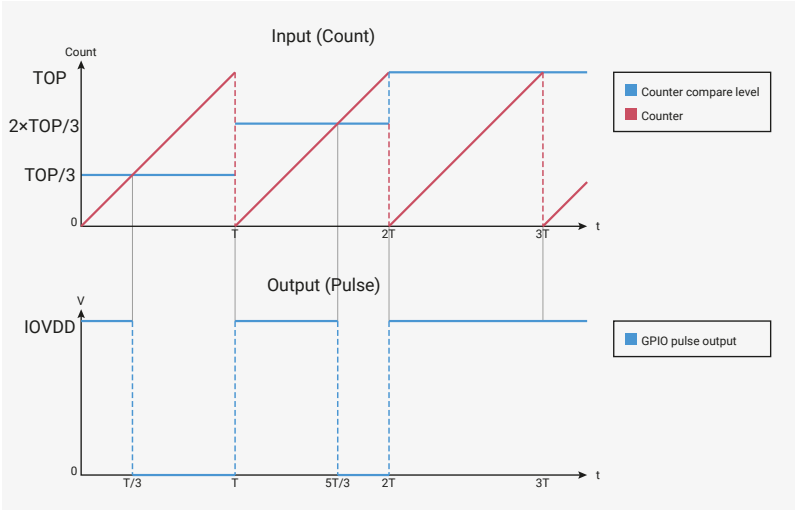

Figure 108. The input value varies with each counter period: first TOP / 3, then 2 × TOP / 3, and finally TOP + 1 for 100% duty cycle. Each increase in the input value causes a corresponding increase in the output duty cycle.

In Figure 108, the input value only changes at the instant where the counter wraps through 0. Figure 109 shows what happens if the input value is allowed to change at any other time: an unwanted glitch is produced at the output.

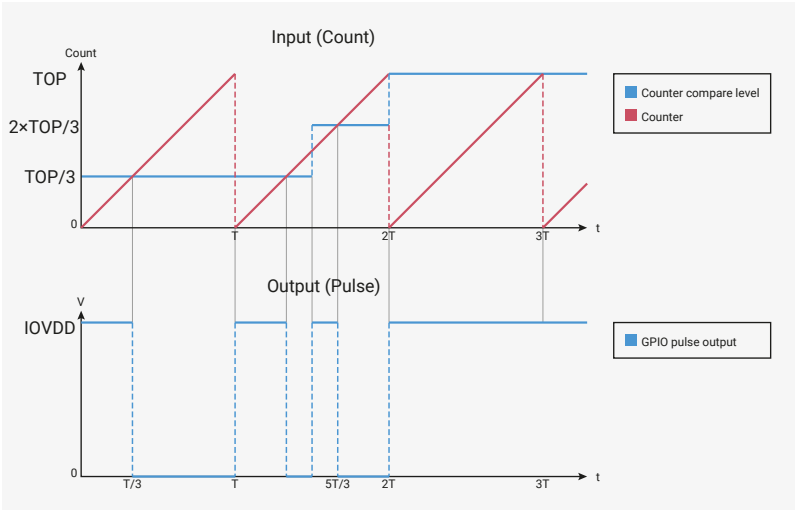

Figure 109. The input value changes whilst the counter is mid-ramp. This produces additional toggling at the output.

The behaviour becomes even more perplexing if the `TOP` register is also modified. It would be difficult for software to write to `CC` or `TOP` with the correct timing. To solve this, each slice has two copies of the `CC` and `TOP` registers: one copy which software can modify, and another, internal copy which is updated from the first register at the instant the counter wraps. Software can modify its copy of the register at will, but the changes are not captured by the PWM output until the next wrap.

Figure 110 shows the sequence of events where a software interrupt handler changes the value of `CC_A` each time the counter wraps.

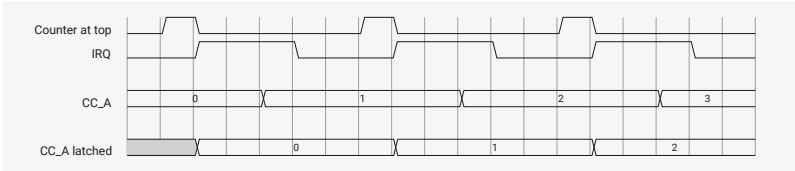

Figure 110. Each counter wrap causes the interrupt request signal to assert. The processor enters its interrupt handler, writes to its copy of the CC register, and clears the interrupt. When the counter wraps again, the latched version of the CC register is instantaneously updated with the most recent value written by software, and this value controls the duty cycle for the next period. The IRQ is reasserted so that software can write another fresh value to its copy of the CC register.

There is no limitation on what values can be written to `CC` or `TOP`, or when they are written. In normal PWM mode (`CSR_PH_CORRECT` is 0) the latched copies are updated when the counter wraps to 0, which occurs once every `TOP` + 1 cycles. In phase-correct mode (`CSR_PH_CORRECT` is 1), the latched copies are updated on the 0 to 0 count transition, i.e. the point where the counter stops counting downward and begins to count upward again.

4.5.2.4. Clock Divider

Each slice has a fractional clock divider, configured by the `DIV` register. This is an 8 integer bit, 4 fractional bit clock divider, which allows the count rate to be slowed by up to a factor of 256. The clock divider allows much lower output frequencies to be achieved — approximately 7.5Hz from a 125MHz system clock. Lower frequencies than this will require a system timer interrupt (Section 4.6)

It does this by generating an enable signal which gates the operation of the counter.

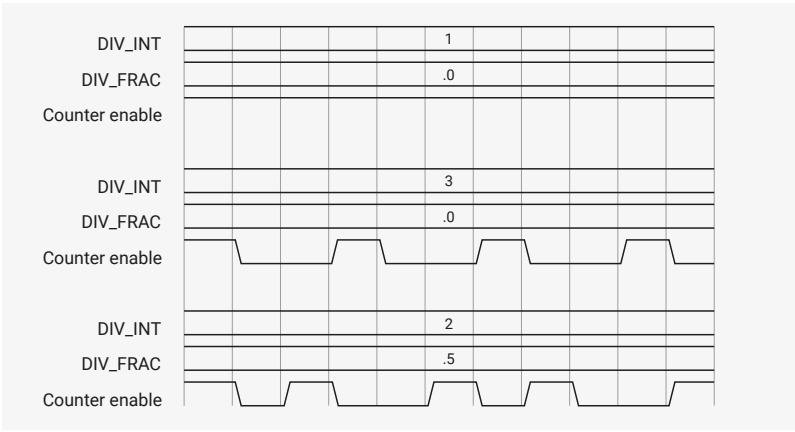

Figure 111. The clock divider generates an enable signal. The counter only counts on cycles where this signal is high. A clock divisor of 1 causes the enable to be asserted on every cycle, so the counter counts by one on every system clock cycle. Higher divisors cause the count enable to be asserted less frequently. Fractional division achieves an average fractional counting rate by spacing some enable pulses further apart than others.

The fractional divider is a first-order delta-sigma type.

The clock divider also allows the effective count range to be extended, when using level-sensitive or edge-sensitive modes to take duty cycle or frequency measurements.

4.5.2.5. Level-sensitive and Edge-sensitive Triggering

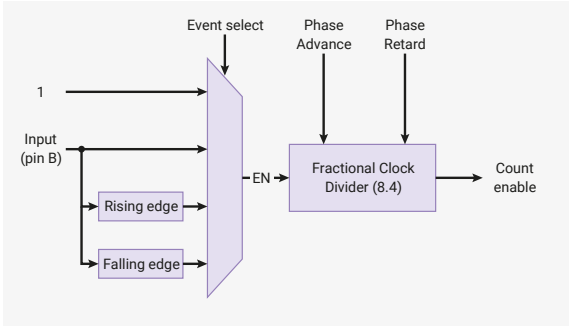

Figure 112. PWM slice event selection. The counter advances when its enable input is high, and this enable is generated in two sequential stages. First, any one of four event types (always on, pin B high, pin B rise, pin B fall) can generate enable pulses for the fractional clock divider. The divider can reduce the rate of the enable pulses, before passing them on to the counter.

By default, each slice's counter is free-running, and will count continuously whenever the slice is enabled. There are three other options available:

- Count continuously when a high level is detected on the B pin
- Count once with each rising edge detected on the B pin
- Count once with each falling edge detected on the B pin

These modes are selected by the `DIVMODE` field in each slice's `CSR`. In free-running mode, the A and B pins are both outputs. In any other mode, the B pin becomes an input, and controls the operation of the counter. `CC_B` is ignored when not in free-running mode.

By allowing the slice to run for a fixed amount of time in level-sensitive or edge-sensitive mode, it's possible to measure the duty cycle or frequency of an input signal. Due to the type of edge-detect circuit used, the low period and high period of the measured signal must both be strictly greater than the system clock period when taking frequency measurements.

The clock divider is still operational in level-sensitive and edge-sensitive mode. At maximum division (writing 0 to `DIV_INT`), the counter will only advance once per 256 high input cycles in level-sensitive modes, or once per 256 edges in edge-sensitive mode. This allows longer-running measurements to be taken, although the resolution is still just 16 bits.

Pico Examples: https://github.com/raspberrypi/pico-examples/blob/master/pwm/measure_duty_cycle/measure_duty_cycle.c Lines 19 - 37

```
19 float measure_duty_cycle(uint gpio) {
20     // Only the PWM B pins can be used as inputs.
21     assert(pwm_gpio_to_channel(gpio) == PWM_CHAN_B);
22     uint slice_num = pwm_gpio_to_slice_num(gpio);
23
24     // Count once for every 100 cycles the PWM B input is high
25     pwm_config cfg = pwm_get_default_config();
26     pwm_config_set_clkdiv_mode(&cfg, PWM_DIV_B_HIGH);
27     pwm_config_set_clkdiv(&cfg, 100);
28     pwm_init(slice_num, &cfg, false);
29     gpio_set_function(gpio, GPIO_FUNC_PWM);
30
31     pwm_set_enabled(slice_num, true);
32     sleep_ms(10);
33     pwm_set_enabled(slice_num, false);
34     float counting_rate = clock_get_hz(clk_sys) / 100;
35     float max_possible_count = counting_rate * 0.01;
36     return pwm_get_counter(slice_num) / max_possible_count;
37 }
```

4.5.2.6. Configuring PWM Period

When free-running, the period of a PWM slice's output (measured in system clock cycles) is controlled by three parameters:

- The TOP register
- Whether phase-correct mode is enabled (CSR_PH_CORRECT)
- The DIV register

The slice counts from 0 to TOP, and then either wraps, or begins counting backward, depending on the setting of CSR_PH_CORRECT. The rate of counting is slowed by the clock divider, with a maximum speed of one count per cycle, and a minimum speed of one count per $255\frac{15}{16}$ cycles. The period in clock cycles can be calculated as:

$$\text{period} = (\text{TOP} + 1) \times (\text{CSR_PH_CORRECT} + 1) \times \left(\text{DIV_INT} + \frac{\text{DIV_FRAC}}{16}\right)$$

The output frequency can then be determined based on the system clock frequency:

$$f_{PWM} = \frac{f_{sys}}{\text{period}} = \frac{f_{sys}}{(\text{TOP} + 1) \times (\text{CSR_PH_CORRECT} + 1) \times \left(\text{DIV_INT} + \frac{\text{DIV_FRAC}}{16}\right)}$$

4.5.2.7. Interrupt Request (IRQ) and DMA Data Request (DREQ)

The PWM block has a single IRQ output. The interrupt status registers INTR, INTS and INTE allow software to control which slices will assert this IRQ output, to check which slices are the cause of the IRQ's assertion, and to clear and acknowledge the interrupt.

A slice generates an interrupt request each time its counter wraps (or, if CSR_PH_CORRECT is enabled, each time the counter returns to 0). This sets the flag corresponding to this slice in the raw interrupt status register, INTR. If this slice's interrupt is enabled in INTE, then this flag will cause the PWM block's IRQ to be asserted, and the flag will also appear in the masked interrupt status register INTS.

Flags are cleared by writing a mask back to INTR. This is demonstrated in the "LED fade" SDK example.

This scheme allows multiple slices to generate interrupts concurrently, and a system interrupt handler to determine which slices caused the most recent interruption, and handle appropriately. Normally this would mean reloading those slices' TOP or CC registers, but the PWM block can also be used as a source of regular interrupt requests for non-PWM-related purposes.

The same pulse which sets the interrupt flag in INTR is also available as a one-cycle data request to the RP2040 system DMA. For each cycle the DMA sees a DREQ asserted, it will make one data transfer to its programmed location, in as timely a manner as possible. In combination with the double-buffered behaviour of CC and TOP, this allows the DMA to efficiently stream data to a PWM slice at a rate of one transfer per counter period. Alternatively, a PWM slice could serve as a pacing timer for DMA transfers to some other memory-mapped hardware.

4.5.2.8. On-the-fly Phase Adjustment

For some applications it is necessary to control the phase relationship between two PWM outputs on different slices.

The global enable register EN contains an alias of the CSR_EN flag for each slice, and allows multiple slices to be started and stopped simultaneously. If two slices with the same output frequency are started at the same time, they will run in perfect lockstep, and have a fixed phase relationship, determined by the initial counter values.

The CSR_PH_ADV and CSR_PH_RET fields will advance or retard a slice's output phase by one count, whilst it is running. They do so by inserting or deleting pulses from the clock enable (the output of the clock divider), as shown in Figure 113.

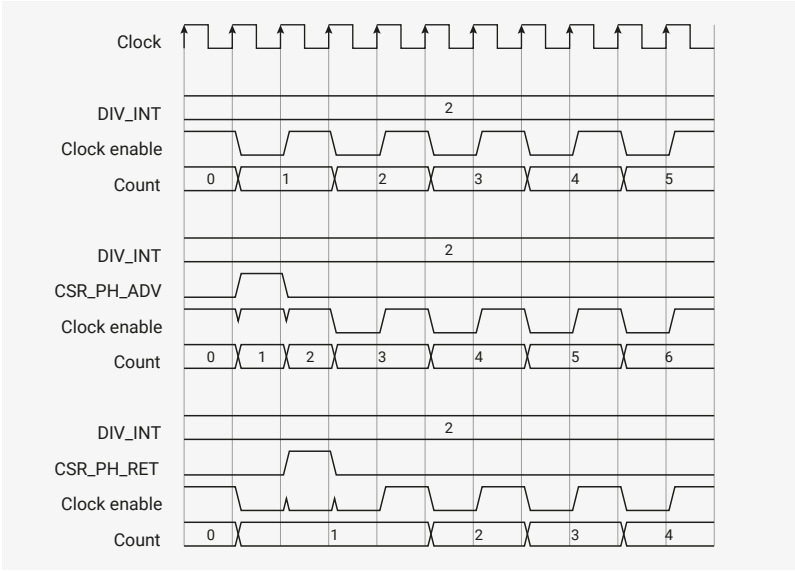

Figure 113. The clock enable signal, output by the clock divider, controls the rate of counting. Phase advance forces the clock enable high on cycles where it is low, causing the counter to jump forward by one count. Phase retard forces the clock enable low when it would be high, holding the counter back by one count.

The counter can not count faster than once per cycle, so `PH_ADV` requires `DIV_INT` > 1 or `DIV_FRAC` > 0. Likewise, the counter will not start to count backward if `PH_RET` is asserted when the clock enable is permanently low.

To advance or retard the phase by one count, software writes 1 to `PH_ADV` or `PH_RET`. Once an enable pulse has been inserted or deleted, the `PH_ADV` or `PH_RET` register bit will return to 0, and software can poll the `CSR` until this happens. `PH_ADV` will always insert a pulse into the next available gap, and `PH_RET` will always delete the next available pulse.

4.5.3. List of Registers

The PWM registers start at a base address of `0x40050000` (defined as PWM_BASE in SDK).

Table 516. List of PWM registers

Offset	Name	Info
0x00	CH0_CSR	Control and status register
0x04	CH0_DIV	INT and FRAC form a fixed-point fractional number. Counting rate is system clock frequency divided by this number. Fractional division uses simple 1st-order sigma-delta.
0x08	CH0_CTR	Direct access to the PWM counter
0x0c	CH0_CC	Counter compare values
0x10	CH0_TOP	Counter wrap value
0x14	CH1_CSR	Control and status register
0x18	CH1_DIV	INT and FRAC form a fixed-point fractional number. Counting rate is system clock frequency divided by this number. Fractional division uses simple 1st-order sigma-delta.
0x1c	CH1_CTR	Direct access to the PWM counter
0x20	CH1_CC	Counter compare values
0x24	CH1_TOP	Counter wrap value
0x28	CH2_CSR	Control and status register
0x2c	CH2_DIV	INT and FRAC form a fixed-point fractional number. Counting rate is system clock frequency divided by this number. Fractional division uses simple 1st-order sigma-delta.

Offset	Name	Info
0x30	CH2_CTR	Direct access to the PWM counter
0x34	CH2_CC	Counter compare values
0x38	CH2_TOP	Counter wrap value
0x3c	CH3_CSR	Control and status register
0x40	CH3_DIV	INT and FRAC form a fixed-point fractional number. Counting rate is system clock frequency divided by this number. Fractional division uses simple 1st-order sigma-delta.
0x44	CH3_CTR	Direct access to the PWM counter
0x48	CH3_CC	Counter compare values
0x4c	CH3_TOP	Counter wrap value
0x50	CH4_CSR	Control and status register
0x54	CH4_DIV	INT and FRAC form a fixed-point fractional number. Counting rate is system clock frequency divided by this number. Fractional division uses simple 1st-order sigma-delta.
0x58	CH4_CTR	Direct access to the PWM counter
0x5c	CH4_CC	Counter compare values
0x60	CH4_TOP	Counter wrap value
0x64	CH5_CSR	Control and status register
0x68	CH5_DIV	INT and FRAC form a fixed-point fractional number. Counting rate is system clock frequency divided by this number. Fractional division uses simple 1st-order sigma-delta.
0x6c	CH5_CTR	Direct access to the PWM counter
0x70	CH5_CC	Counter compare values
0x74	CH5_TOP	Counter wrap value
0x78	CH6_CSR	Control and status register
0x7c	CH6_DIV	INT and FRAC form a fixed-point fractional number. Counting rate is system clock frequency divided by this number. Fractional division uses simple 1st-order sigma-delta.
0x80	CH6_CTR	Direct access to the PWM counter
0x84	CH6_CC	Counter compare values
0x88	CH6_TOP	Counter wrap value
0x8c	CH7_CSR	Control and status register
0x90	CH7_DIV	INT and FRAC form a fixed-point fractional number. Counting rate is system clock frequency divided by this number. Fractional division uses simple 1st-order sigma-delta.
0x94	CH7_CTR	Direct access to the PWM counter
0x98	CH7_CC	Counter compare values
0x9c	CH7_TOP	Counter wrap value

Offset	Name	Info
0xa0	EN	This register aliases the CSR_EN bits for all channels. Writing to this register allows multiple channels to be enabled or disabled simultaneously, so they can run in perfect sync. For each channel, there is only one physical EN register bit, which can be accessed through here or CHx_CSR.
0xa4	INTR	Raw Interrupts
0xa8	INTE	Interrupt Enable
0xac	INTF	Interrupt Force
0xb0	INTS	Interrupt status after masking & forcing

PWM: CH0_CSR, CH1_CSR, ..., CH6_CSR, CH7_CSR Registers

Offsets: 0x00, 0x14, ..., 0x78, 0x8c

Description

Control and status register

Table 517. CH0_CSR, CH1_CSR, ..., CH6_CSR, CH7_CSR Registers

Bits	Description	Type	Reset
31:8	Reserved.	-	-
7	**PH_ADV**: Advance the phase of the counter by 1 count, while it is running. Self-clearing. Write a 1, and poll until low. Counter must be running at less than full speed (div_int + div_frac / 16 > 1)	SC	0x0
6	**PH_RET**: Retard the phase of the counter by 1 count, while it is running. Self-clearing. Write a 1, and poll until low. Counter must be running.	SC	0x0
5:4	**DIVMODE**	RW	0x0
	Enumerated values:		
	0x0 → DIV: Free-running counting at rate dictated by fractional divider		
	0x1 → LEVEL: Fractional divider operation is gated by the PWM B pin.		
	0x2 → RISE: Counter advances with each rising edge of the PWM B pin.		
	0x3 → FALL: Counter advances with each falling edge of the PWM B pin.		
3	**B_INV**: Invert output B	RW	0x0
2	**A_INV**: Invert output A	RW	0x0
1	**PH_CORRECT**: 1: Enable phase-correct modulation. 0: Trailing-edge	RW	0x0
0	**EN**: Enable the PWM channel.	RW	0x0

PWM: CH0_DIV, CH1_DIV, ..., CH6_DIV, CH7_DIV Registers

Offsets: 0x04, 0x18, ..., 0x7c, 0x90

Description

INT and FRAC form a fixed-point fractional number.
Counting rate is system clock frequency divided by this number.
Fractional division uses simple 1st-order sigma-delta.

Table 518. CH0_DIV, CH1_DIV, ..., CH6_DIV, CH7_DIV Registers

Bits	Description	Type	Reset
31:12	Reserved.	-	-
11:4	**INT**	RW	0x01
3:0	**FRAC**	RW	0x0

PWM: CH0_CTR, CH1_CTR, ..., CH6_CTR, CH7_CTR Registers

Offsets: 0x08, 0x1c, ..., 0x80, 0x94

Table 519. CH0_CTR, CH1_CTR, ..., CH6_CTR, CH7_CTR Registers

Bits	Description	Type	Reset
31:16	Reserved.	-	-
15:0	Direct access to the PWM counter	RW	0x0000

PWM: CH0_CC, CH1_CC, ..., CH6_CC, CH7_CC Registers

Offsets: 0x0c, 0x20, ..., 0x84, 0x98

Description

Counter compare values

Table 520. CH0_CC, CH1_CC, ..., CH6_CC, CH7_CC Registers

Bits	Description	Type	Reset
31:16	**B**	RW	0x0000
15:0	**A**	RW	0x0000

PWM: CH0_TOP, CH1_TOP, ..., CH6_TOP, CH7_TOP Registers

Offsets: 0x10, 0x24, ..., 0x88, 0x9c

Table 521. CH0_TOP, CH1_TOP, ..., CH6_TOP, CH7_TOP Registers

Bits	Description	Type	Reset
31:16	Reserved.	-	-
15:0	Counter wrap value	RW	0xffff

PWM: EN Register

Offset: 0xa0

Description

This register aliases the CSR_EN bits for all channels.
Writing to this register allows multiple channels to be enabled
or disabled simultaneously, so they can run in perfect sync.
For each channel, there is only one physical EN register bit,
which can be accessed through here or CHx_CSR.

Table 522. EN Register

Bits	Description	Type	Reset
31:8	Reserved.	-	-
7	**CH7**	RW	0x0
6	**CH6**	RW	0x0
5	**CH5**	RW	0x0
4	**CH4**	RW	0x0
3	**CH3**	RW	0x0

Bits	Description	Type	Reset
2	**CH2**	RW	0x0
1	**CH1**	RW	0x0
0	**CH0**	RW	0x0

PWM: INTR Register

Offset: 0xa4

Description

Raw Interrupts

Table 523. INTR Register

Bits	Description	Type	Reset
31:8	Reserved.	-	-
7	**CH7**	WC	0x0
6	**CH6**	WC	0x0
5	**CH5**	WC	0x0
4	**CH4**	WC	0x0
3	**CH3**	WC	0x0
2	**CH2**	WC	0x0
1	**CH1**	WC	0x0
0	**CH0**	WC	0x0

PWM: INTE Register

Offset: 0xa8

Description

Interrupt Enable

Table 524. INTE Register

Bits	Description	Type	Reset
31:8	Reserved.	-	-
7	**CH7**	RW	0x0
6	**CH6**	RW	0x0
5	**CH5**	RW	0x0
4	**CH4**	RW	0x0
3	**CH3**	RW	0x0
2	**CH2**	RW	0x0
1	**CH1**	RW	0x0
0	**CH0**	RW	0x0

PWM: INTF Register

Offset: 0xac

Description

Interrupt Force

Table 525. INTF Register

Bits	Description	Type	Reset
31:8	Reserved.	-	-
7	**CH7**	RW	0x0
6	**CH6**	RW	0x0
5	**CH5**	RW	0x0
4	**CH4**	RW	0x0
3	**CH3**	RW	0x0
2	**CH2**	RW	0x0
1	**CH1**	RW	0x0
0	**CH0**	RW	0x0

PWM: INTS Register

Offset: 0xb0

Description

Interrupt status after masking & forcing

Table 526. INTS Register

Bits	Description	Type	Reset
31:8	Reserved.	-	-
7	**CH7**	RO	0x0
6	**CH6**	RO	0x0
5	**CH5**	RO	0x0
4	**CH4**	RO	0x0
3	**CH3**	RO	0x0
2	**CH2**	RO	0x0
1	**CH1**	RO	0x0
0	**CH0**	RO	0x0

4.6. Timer

4.6.1. Overview

The system timer peripheral on RP2040 provides a global microsecond timebase for the system, and generates interrupts based on this timebase. It supports the following features:

- A single 64-bit counter, incrementing once per microsecond
- This counter can be read from a pair of latching registers, for race-free reads over a 32-bit bus.
- Four alarms: match on the lower 32 bits of counter, IRQ on match.

The timer uses a one microsecond reference that is generated in the Watchdog (see Section 4.7.2), and derived from

the reference clock (Figure 28), which itself is usually connected directly to the crystal oscillator (Section 2.16).

The 64-bit counter effectively can not overflow (thousands of years at 1MHz), so the system timer is completely monotonic in practice.

4.6.1.1. Other Timer Resources on RP2040

The system timer is intended to provide a global timebase for software. RP2040 has a number of other programmable counter resources which can provide regular interrupts, or trigger DMA transfers.

- The PWM (Section 4.5) contains 8× 16-bit programmable counters, which run at up to system speed, can generate interrupts, and can be continuously reprogrammed via the DMA, or trigger DMA transfers to other peripherals.
- 8× PIO state machines (Chapter 3) can count 32-bit values at system speed, and generate interrupts.
- The DMA (Section 2.5) has four internal pacing timers, which trigger transfers at regular intervals.
- Each Cortex-M0+ core (Section 2.4) has a standard 24-bit SysTick timer, counting either the microsecond tick (Section 4.7.2) or the system clock.

4.6.2. Counter

The timer has a 64-bit counter, but RP2040 only has a 32-bit data bus. This means that the `TIME` value is accessed through a pair of registers. These are:

- TIMEHW and TIMELW to write the time
- TIMEHR and TIMELR to read the time

These pairs are used by accessing the lower register, `L`, followed by the higher register, `H`. In the read case, reading the `L` register latches the value in the `H` register so that an accurate time can be read. Alternatively, TIMERAWH and TIMERAWL can be used to read the raw time without any latching.

CAUTION

While it is technically possible to force a new time value by writing to the TIMEHW and TIMELW registers, programmers are discouraged from doing this. This is because the timer value is expected to be monotonically increasing by the SDK which uses it for timeouts, elapsed time etc.

4.6.3. Alarms

The timer has 4 alarms, and outputs a separate interrupt for each alarm. The alarms match on the lower 32 bits of the 64-bit counter which means they can be fired at a maximum of 2^{32} microseconds into the future. This is equivalent to:

- $2^{32} \div 10^6$: ~4295 seconds
- 4295 ÷ 60: ~72 minutes

NOTE

This timer is expected to be used for short sleeps. If you want a longer alarm see Section 4.8.

To enable an alarm:

- Enable the interrupt at the timer with a write to the appropriate alarm bit in INTE: i.e. `(1 << 0)` for `ALARM0`
- Enable the appropriate timer interrupt at the processor (see Section 2.3.2)
- Write the time you would like the interrupt to fire to ALARM0 (i.e. the current value in TIMERAWL plus your desired alarm time in microseconds). Writing the time to the `ALARM` register sets the ARMED bit as a side effect.

Once the alarm has fired, the ARMED bit will be set to `0`. To clear the latched interrupt, write a `1` to the appropriate bit in INTR.

4.6.4. Programmer's Model

NOTE

The Watchdog tick (see Section 4.7.2) must be running for the timer to start counting. The SDK starts this tick as part of the platform initialisation code.

4.6.4.1. Reading the time

NOTE

Time here refers to the number of microseconds since the timer was started, it is not a clock. For that - see Section 4.8.

The simplest form of reading the 64-bit time is to read TIMELR followed by TIMEHR. However, because RP2040 has 2 cores, it is unsafe to do this if the second core is executing code that can also access the timer, or if the timer is read concurrently in an IRQ handler and in thread mode. This is because reading TIMELR latches the value in TIMEHR (i.e. stops it updating) until TIMEHR is read. If one core reads TIMELR followed by another core reading TIMELR, the value in TIMEHR isn't necessarily accurate. The example below shows the simplest form of getting the 64-bit time.

Pico Examples: https://github.com/raspberrypi/pico-examples/blob/master/timer/timer_lowlevel/timer_lowlevel.c Lines 15 - 23

```
15 // Simplest form of getting 64 bit time from the timer.
16 // It isn't safe when called from 2 cores because of the latching
17 // so isn't implemented this way in the sdk
18 static uint64_t get_time(void) {
19     // Reading low latches the high value
20     uint32_t lo = timer_hw->timelr;
21     uint32_t hi = timer_hw->timehr;
22     return ((uint64_t) hi << 32u) | lo;
23 }
```

The SDK provides a `time_us_64` function that uses a more thorough method to get the 64-bit time, which makes use of the TIMERAWH and TIMERAWL registers. The `RAW` registers don't latch, and therefore make `time_us_64` safe to call from multiple cores at once.

SDK: https://github.com/raspberrypi/pico-sdk/blob/master/src/rp2_common/hardware_timer/timer.c Lines 57 - 73

```
57 uint64_t timer_time_us_64(timer_hw_t *timer) {
58     // Need to make sure that the upper 32 bits of the timer
59     // don't change, so read that first
60     uint32_t hi = timer->timerawh;
61     uint32_t lo;
62     do {
63         // Read the lower 32 bits
64         lo = timer->timerawl;
65         // Now read the upper 32 bits again and
66         // check that it hasn't incremented. If it has loop around
67         // and read the lower 32 bits again to get an accurate value
68         uint32_t next_hi = timer->timerawh;
69         if (hi == next_hi) break;
70         hi = next_hi;
```

```
71     } while (true);
72     return ((uint64_t) hi << 32u) | lo;
73 }
```

4.6.4.2. Set an alarm

The standalone timer example, timer_lowlevel, demonstrates how to set an alarm at a hardware level, without the additional abstraction over the timer that the SDK provides. To use these abstractions see Section 4.6.4.4.

Pico Examples: https://github.com/raspberrypi/pico-examples/blob/master/timer/timer_lowlevel/timer_lowlevel.c Lines 27 - 74

```
27 // Use alarm 0
28 #define ALARM_NUM 0
29 #define ALARM_IRQ timer_hardware_alarm_get_irq_num(timer_hw, ALARM_NUM)
30
31 // Alarm interrupt handler
32 static volatile bool alarm_fired;
33
34 static void alarm_irq(void) {
35     // Clear the alarm irq
36     hw_clear_bits(&timer_hw->intr, 1u << ALARM_NUM);
37
38     // Assume alarm 0 has fired
39     printf("Alarm IRQ fired\n");
40     alarm_fired = true;
41 }
42
43 static void alarm_in_us(uint32_t delay_us) {
44     // Enable the interrupt for our alarm (the timer outputs 4 alarm irqs)
45     hw_set_bits(&timer_hw->inte, 1u << ALARM_NUM);
46     // Set irq handler for alarm irq
47     irq_set_exclusive_handler(ALARM_IRQ, alarm_irq);
48     // Enable the alarm irq
49     irq_set_enabled(ALARM_IRQ, true);
50     // Enable interrupt in block and at processor
51
52     // Alarm is only 32 bits so if trying to delay more
53     // than that need to be careful and keep track of the upper
54     // bits
55     uint64_t target = timer_hw->timerawl + delay_us;
56
57     // Write the lower 32 bits of the target time to the alarm which
58     // will arm it
59     timer_hw->alarm[ALARM_NUM] = (uint32_t) target;
60 }
61
62 int main() {
63     stdio_init_all();
64     printf("Timer lowlevel!\n");
65
66     // Set alarm every 2 seconds
67     while (1) {
68         alarm_fired = false;
69         alarm_in_us(1000000 * 2);
70         // Wait for alarm to fire
71         while (!alarm_fired);
72     }
73 }
```

4.6.4.3. Busy wait

If you don't want to use an alarm to wait for a period of time, instead use a while loop. The SDK provides various `busy_wait_` functions to do this:

SDK: https://github.com/raspberrypi/pico-sdk/blob/master/src/rp2_common/hardware_timer/timer.c Lines 77 - 122

```
77 void timer_busy_wait_us_32(timer_hw_t *timer, uint32_t delay_us) {
78     if (0 <= (int32_t)delay_us) {
79         // we only allow 31 bits, otherwise we could have a race in the loop below with
80         // values very close to 2^32
81         uint32_t start = timer->timerawl;
82         while (timer->timerawl - start < delay_us) {
83             tight_loop_contents();
84         }
85     } else {
86         busy_wait_us(delay_us);
87     }
88 }
89
90 void timer_busy_wait_us(timer_hw_t *timer, uint64_t delay_us) {
91     uint64_t base = timer_time_us_64(timer);
92     uint64_t target = base + delay_us;
93     if (target < base) {
94         target = (uint64_t)-1;
95     }
96     absolute_time_t t;
97     update_us_since_boot(&t, target);
98     timer_busy_wait_until(timer, t);
99 }
100
101 void timer_busy_wait_ms(timer_hw_t *timer, uint32_t delay_ms)
102 {
103     if (delay_ms <= 0x7fffffffu / 1000) {
104         timer_busy_wait_us_32(timer, delay_ms * 1000);
105     } else {
106         timer_busy_wait_us(timer, delay_ms * 1000ull);
107     }
108 }
109
110 void timer_busy_wait_until(timer_hw_t *timer, absolute_time_t t) {
111     uint64_t target = to_us_since_boot(t);
112     uint32_t hi_target = (uint32_t)(target >> 32u);
113     uint32_t hi = timer->timerawh;
114     while (hi < hi_target) {
115         hi = timer->timerawh;
116         tight_loop_contents();
117     }
118     while (hi == hi_target && timer->timerawl < (uint32_t) target) {
119         hi = timer->timerawh;
120         tight_loop_contents();
121     }
122 }
```

4.6.4.4. Complete example using SDK

Pico Examples: https://github.com/raspberrypi/pico-examples/blob/master/timer/hello_timer/hello_timer.c Lines 11 - 57

```
11 volatile bool timer_fired = false;
12
13 int64_t alarm_callback(alarm_id_t id, __unused void *user_data) {
14     printf("Timer %d fired!\n", (int) id);
15     timer_fired = true;
16     // Can return a value here in us to fire in the future
17     return 0;
18 }
19
20 bool repeating_timer_callback(__unused struct repeating_timer *t) {
21     printf("Repeat at %lld\n", time_us_64());
22     return true;
23 }
24
25 int main() {
26     stdio_init_all();
27     printf("Hello Timer!\n");
28
29     // Call alarm_callback in 2 seconds
30     add_alarm_in_ms(2000, alarm_callback, NULL, false);
31
32     // Wait for alarm callback to set timer_fired
33     while (!timer_fired) {
34         tight_loop_contents();
35     }
36
37     // Create a repeating timer that calls repeating_timer_callback.
38     // If the delay is > 0 then this is the delay between the previous callback ending and the
   next starting.
39     // If the delay is negative (see below) then the next call to the callback will be exactly
   500ms after the
40     // start of the call to the last callback
41     struct repeating_timer timer;
42     add_repeating_timer_ms(500, repeating_timer_callback, NULL, &timer);
43     sleep_ms(3000);
44     bool cancelled = cancel_repeating_timer(&timer);
45     printf("cancelled... %d\n", cancelled);
46     sleep_ms(2000);
47
48     // Negative delay so means we will call repeating_timer_callback, and call it again
49     // 500ms later regardless of how long the callback took to execute
50     add_repeating_timer_ms(-500, repeating_timer_callback, NULL, &timer);
51     sleep_ms(3000);
52     cancelled = cancel_repeating_timer(&timer);
53     printf("cancelled... %d\n", cancelled);
54     sleep_ms(2000);
55     printf("Done\n");
56     return 0;
57 }
```

4.6.5. List of Registers

The Timer registers start at a base address of `0x40054000` (defined as TIMER_BASE in SDK).

Table 527. List of TIMER registers

Offset	Name	Info
0x00	TIMEHW	Write to bits 63:32 of time always write timelw before timehw

Offset	Name	Info
0x04	TIMELW	Write to bits 31:0 of time writes do not get copied to time until timehw is written
0x08	TIMEHR	Read from bits 63:32 of time always read timelr before timehr
0x0c	TIMELR	Read from bits 31:0 of time
0x10	ALARM0	Arm alarm 0, and configure the time it will fire. Once armed, the alarm fires when TIMER_ALARM0 == TIMELR. The alarm will disarm itself once it fires, and can be disarmed early using the ARMED status register.
0x14	ALARM1	Arm alarm 1, and configure the time it will fire. Once armed, the alarm fires when TIMER_ALARM1 == TIMELR. The alarm will disarm itself once it fires, and can be disarmed early using the ARMED status register.
0x18	ALARM2	Arm alarm 2, and configure the time it will fire. Once armed, the alarm fires when TIMER_ALARM2 == TIMELR. The alarm will disarm itself once it fires, and can be disarmed early using the ARMED status register.
0x1c	ALARM3	Arm alarm 3, and configure the time it will fire. Once armed, the alarm fires when TIMER_ALARM3 == TIMELR. The alarm will disarm itself once it fires, and can be disarmed early using the ARMED status register.
0x20	ARMED	Indicates the armed/disarmed status of each alarm. A write to the corresponding ALARMx register arms the alarm. Alarms automatically disarm upon firing, but writing ones here will disarm immediately without waiting to fire.
0x24	TIMERAWH	Raw read from bits 63:32 of time (no side effects)
0x28	TIMERAWL	Raw read from bits 31:0 of time (no side effects)
0x2c	DBGPAUSE	Set bits high to enable pause when the corresponding debug ports are active
0x30	PAUSE	Set high to pause the timer
0x34	INTR	Raw Interrupts
0x38	INTE	Interrupt Enable
0x3c	INTF	Interrupt Force
0x40	INTS	Interrupt status after masking & forcing

TIMER: TIMEHW Register

Offset: 0x00

Table 528. TIMEHW Register

Bits	Description	Type	Reset
31:0	Write to bits 63:32 of time always write timelw before timehw	WF	0x00000000

TIMER: TIMELW Register

Offset: 0x04

Table 529. TIMELW Register

Bits	Description	Type	Reset
31:0	Write to bits 31:0 of time writes do not get copied to time until timehw is written	WF	0x00000000

TIMER: TIMEHR Register

Offset: 0x08

Table 530. TIMEHR Register

Bits	Description	Type	Reset
31:0	Read from bits 63:32 of time always read timelr before timehr	RO	0x00000000

TIMER: TIMELR Register

Offset: 0x0c

Table 531. TIMELR Register

Bits	Description	Type	Reset
31:0	Read from bits 31:0 of time	RO	0x00000000

TIMER: ALARM0 Register

Offset: 0x10

Table 532. ALARM0 Register

Bits	Description	Type	Reset
31:0	Arm alarm 0, and configure the time it will fire. Once armed, the alarm fires when TIMER_ALARM0 == TIMELR. The alarm will disarm itself once it fires, and can be disarmed early using the ARMED status register.	RW	0x00000000

TIMER: ALARM1 Register

Offset: 0x14

Table 533. ALARM1 Register

Bits	Description	Type	Reset
31:0	Arm alarm 1, and configure the time it will fire. Once armed, the alarm fires when TIMER_ALARM1 == TIMELR. The alarm will disarm itself once it fires, and can be disarmed early using the ARMED status register.	RW	0x00000000

TIMER: ALARM2 Register

Offset: 0x18

Table 534. ALARM2 Register

Bits	Description	Type	Reset
31:0	Arm alarm 2, and configure the time it will fire. Once armed, the alarm fires when TIMER_ALARM2 == TIMELR. The alarm will disarm itself once it fires, and can be disarmed early using the ARMED status register.	RW	0x00000000

TIMER: ALARM3 Register

Offset: 0x1c

Table 535. ALARM3 Register

Bits	Description	Type	Reset
31:0	Arm alarm 3, and configure the time it will fire. Once armed, the alarm fires when TIMER_ALARM3 == TIMELR. The alarm will disarm itself once it fires, and can be disarmed early using the ARMED status register.	RW	0x00000000

TIMER: ARMED Register

Offset: 0x20

Table 536. ARMED Register

Bits	Description	Type	Reset
31:4	Reserved.	-	-
3:0	Indicates the armed/disarmed status of each alarm. A write to the corresponding ALARMx register arms the alarm. Alarms automatically disarm upon firing, but writing ones here will disarm immediately without waiting to fire.	WC	0x0

TIMER: TIMERAWH Register

Offset: 0x24

Table 537. TIMERAWH Register

Bits	Description	Type	Reset
31:0	Raw read from bits 63:32 of time (no side effects)	RO	0x00000000

TIMER: TIMERAWL Register

Offset: 0x28

Table 538. TIMERAWL Register

Bits	Description	Type	Reset
31:0	Raw read from bits 31:0 of time (no side effects)	RO	0x00000000

TIMER: DBGPAUSE Register

Offset: 0x2c

Description

Set bits high to enable pause when the corresponding debug ports are active

Table 539. DBGPAUSE Register

Bits	Description	Type	Reset
31:3	Reserved.	-	-
2	**DBG1**: Pause when processor 1 is in debug mode	RW	0x1
1	**DBG0**: Pause when processor 0 is in debug mode	RW	0x1

Bits	Description	Type	Reset
0	Reserved.	-	-

TIMER: PAUSE Register

Offset: 0x30

Table 540. PAUSE Register

Bits	Description	Type	Reset
31:1	Reserved.	-	-
0	Set high to pause the timer	RW	0x0

TIMER: INTR Register

Offset: 0x34

Description

Raw Interrupts

Table 541. INTR Register

Bits	Description	Type	Reset
31:4	Reserved.	-	-
3	**ALARM_3**	WC	0x0
2	**ALARM_2**	WC	0x0
1	**ALARM_1**	WC	0x0
0	**ALARM_0**	WC	0x0

TIMER: INTE Register

Offset: 0x38

Description

Interrupt Enable

Table 542. INTE Register

Bits	Description	Type	Reset
31:4	Reserved.	-	-
3	**ALARM_3**	RW	0x0
2	**ALARM_2**	RW	0x0
1	**ALARM_1**	RW	0x0
0	**ALARM_0**	RW	0x0

TIMER: INTF Register

Offset: 0x3c

Description

Interrupt Force

Table 543. INTF Register

Bits	Description	Type	Reset
31:4	Reserved.	-	-
3	**ALARM_3**	RW	0x0

Bits	Description	Type	Reset
2	**ALARM_2**	RW	0x0
1	**ALARM_1**	RW	0x0
0	**ALARM_0**	RW	0x0

TIMER: INTS Register

Offset: 0x40

Description

Interrupt status after masking & forcing

Table 544. INTS Register

Bits	Description	Type	Reset
31:4	Reserved.	-	-
3	**ALARM_3**	RO	0x0
2	**ALARM_2**	RO	0x0
1	**ALARM_1**	RO	0x0
0	**ALARM_0**	RO	0x0

4.7. Watchdog

4.7.1. Overview

The watchdog is a countdown timer that can restart parts of the chip if it reaches zero. This can be used to restart the processor if software gets stuck in an infinite loop. The programmer must periodically write a value to the watchdog to stop it from reaching zero.

The watchdog is reset by `rst_n_run`, which is deasserted as soon as the digital core supply (DVDD) is powered and stable, and the RUN pin is high. This allows the watchdog reset to feed into the power-on state machine (see Section 2.13) and reset controller (see Section 2.14), resetting their dependants if they are selected in the `WDSEL` register. The `WDSEL` register exists in both the power-on state machine and reset controller.

4.7.2. Tick generation

The watchdog reference clock, `clk_tick`, is driven from `clk_ref`. Ideally `clk_ref` will be configured to use the Crystal Oscillator (Section 2.16) so that it provides an accurate reference clock. The reference clock is divided internally to generate a tick (nominally 1µs) to use as the watchdog tick. The tick is configured using the TICK register.

NOTE

To avoid duplicating logic, this tick is also distributed to the timer (see Section 4.6) and used as the timer reference.

The SDK starts the watchdog tick in `clocks_init`:

SDK: https://github.com/raspberrypi/pico-sdk/blob/master/src/rp2_common/hardware_watchdog/watchdog.c Lines 16 - 18

```
16 void watchdog_start_tick(uint cycles) {
17     tick_start(TICK_WATCHDOG, cycles);
```

```
18 }
```

4.7.3. Watchdog Counter

The watchdog counter is loaded by the LOAD register. The current value can be seen in CTRL.TIME.

WARNING

Due to a logic error, the watchdog counter is decremented twice per tick. Which means the programmer needs to program double the intended count down value. The SDK examples take this issue into account. See RP2040-E1 for more information.

4.7.4. Scratch Registers

The watchdog contains eight 32-bit scratch registers that can be used to store information between soft resets of the chip. A `rst_n_run` event triggered by toggling the RUN pin or cycling the digital core supply (DVDD) will reset the scratch registers.

The bootrom checks the watchdog scratch registers for a magic number on boot. This can be used to soft reset the chip into some user specified code. See Section 2.8.1.1 for more information.

4.7.5. Programmer's Model

The SDK provides a hardware_watchdog driver to control the watchdog.

4.7.5.1. Enabling the watchdog

SDK: https://github.com/raspberrypi/pico-sdk/blob/master/src/rp2_common/hardware_watchdog/watchdog.c Lines 42 - 74

```
42 // Helper function used by both watchdog_enable and watchdog_reboot
43 void _watchdog_enable(uint32_t delay_ms, bool pause_on_debug) {
44     valid_params_if(HARDWARE_WATCHDOG, delay_ms <= WATCHDOG_LOAD_BITS / (1000 *
   WATCHDOG_XFACTOR));
45     hw_clear_bits(&watchdog_hw->ctrl, WATCHDOG_CTRL_ENABLE_BITS);
46
47     // Reset everything apart from ROSC and XOSC
48     hw_set_bits(&psm_hw->wdsel, PSM_WDSEL_BITS & ~(PSM_WDSEL_ROSC_BITS |
   PSM_WDSEL_XOSC_BITS));
49
50     uint32_t dbg_bits = WATCHDOG_CTRL_PAUSE_DBG0_BITS |
51                         WATCHDOG_CTRL_PAUSE_DBG1_BITS |
52                         WATCHDOG_CTRL_PAUSE_JTAG_BITS;
53
54     if (pause_on_debug) {
55         hw_set_bits(&watchdog_hw->ctrl, dbg_bits);
56     } else {
57         hw_clear_bits(&watchdog_hw->ctrl, dbg_bits);
58     }
59
60     if (!delay_ms) {
61         hw_set_bits(&watchdog_hw->ctrl, WATCHDOG_CTRL_TRIGGER_BITS);
62     } else {
63         load_value = delay_ms * 1000;
64         load_value *= 2;
```

```
65         if (load_value > WATCHDOG_LOAD_BITS)
66             load_value = WATCHDOG_LOAD_BITS;
67
68         watchdog_update();
69
70         hw_set_bits(&watchdog_hw->ctrl, WATCHDOG_CTRL_ENABLE_BITS);
71     }
72 }
```

4.7.5.2. Updating the watchdog counter

SDK: https://github.com/raspberrypi/pico-sdk/blob/master/src/rp2_common/hardware_watchdog/watchdog.c Lines 24 - 28

```
24 static uint32_t load_value;
25
26 void watchdog_update(void) {
27     watchdog_hw->load = load_value;
28 }
```

4.7.5.3. Usage

The Pico Examples repository provides a hello_watchdog example that uses the hardware_watchdog to demonstrate use of the watchdog.

Pico Examples: https://github.com/raspberrypi/pico-examples/blob/master/watchdog/hello_watchdog/hello_watchdog.c Lines 11 - 33

```
11 int main() {
12     stdio_init_all();
13
14     if (watchdog_enable_caused_reboot()) {
15         printf("Rebooted by Watchdog!\n");
16         return 0;
17     } else {
18         printf("Clean boot\n");
19     }
20
21     // Enable the watchdog, requiring the watchdog to be updated every 100ms or the chip will
   reboot
22     // second arg is pause on debug which means the watchdog will pause when stepping through
   code
23     watchdog_enable(100, 1);
24
25     for (uint i = 0; i < 5; i++) {
26         printf("Updating watchdog %d\n", i);
27         watchdog_update();
28     }
29
30     // Wait in an infinite loop and don't update the watchdog so it reboots us
31     printf("Waiting to be rebooted by watchdog\n");
32     while(1);
33 }
```

4.7.6. List of Registers

The watchdog registers start at a base address of `0x40058000` (defined as WATCHDOG_BASE in SDK).

Table 545. List of WATCHDOG registers

Offset	Name	Info
0x00	CTRL	Watchdog control
0x04	LOAD	Load the watchdog timer.
0x08	REASON	Logs the reason for the last reset.
0x0c	SCRATCH0	Scratch register
0x10	SCRATCH1	Scratch register
0x14	SCRATCH2	Scratch register
0x18	SCRATCH3	Scratch register
0x1c	SCRATCH4	Scratch register
0x20	SCRATCH5	Scratch register
0x24	SCRATCH6	Scratch register
0x28	SCRATCH7	Scratch register
0x2c	TICK	Controls the tick generator

WATCHDOG: CTRL Register

Offset: 0x00

Description

Watchdog control
The rst_wdsel register determines which subsystems are reset when the watchdog is triggered.
The watchdog can be triggered in software.

Table 546. CTRL Register

Bits	Description	Type	Reset
31	**TRIGGER**: Trigger a watchdog reset	SC	0x0
30	**ENABLE**: When not enabled the watchdog timer is paused	RW	0x0
29:27	Reserved.	-	-
26	**PAUSE_DBG1**: Pause the watchdog timer when processor 1 is in debug mode	RW	0x1
25	**PAUSE_DBG0**: Pause the watchdog timer when processor 0 is in debug mode	RW	0x1
24	**PAUSE_JTAG**: Pause the watchdog timer when JTAG is accessing the bus fabric	RW	0x1
23:0	**TIME**: Indicates the number of ticks / 2 (see errata RP2040-E1) before a watchdog reset will be triggered	RO	0x000000

WATCHDOG: LOAD Register

Offset: 0x04

Table 547. LOAD Register

Bits	Description	Type	Reset
31:24	Reserved.	-	-
23:0	Load the watchdog timer. The maximum setting is 0xffffff which corresponds to 0xffffff / 2 ticks before triggering a watchdog reset (see errata RP2040-E1).	WF	0x000000

WATCHDOG: REASON Register

Offset: 0x08

Description

Logs the reason for the last reset. Both bits are zero for the case of a hardware reset.

Table 548. REASON Register

Bits	Description	Type	Reset
31:2	Reserved.	-	-
1	**FORCE**	RO	0x0
0	**TIMER**	RO	0x0

WATCHDOG: SCRATCH0, SCRATCH1, ..., SCRATCH6, SCRATCH7 Registers

Offsets: 0x0c, 0x10, ..., 0x24, 0x28

Table 549. SCRATCH0, SCRATCH1, ..., SCRATCH6, SCRATCH7 Registers

Bits	Description	Type	Reset
31:0	Scratch register. Information persists through soft reset of the chip.	RW	0x00000000

WATCHDOG: TICK Register

Offset: 0x2c

Description

Controls the tick generator

Table 550. TICK Register

Bits	Description	Type	Reset
31:20	Reserved.	-	-
19:11	**COUNT**: Count down timer: the remaining number clk_tick cycles before the next tick is generated.	RO	-
10	**RUNNING**: Is the tick generator running?	RO	-
9	**ENABLE**: start / stop tick generation	RW	0x1
8:0	**CYCLES**: Total number of clk_tick cycles before the next tick.	RW	0x000

4.8. RTC

The Real-time Clock (RTC) provides time in human-readable format and can be used to generate interrupts at specific times.

4.8.1. Storage Format

Time is stored in binary, separated in seven fields:

Table 551. RTC storage format

Date/Time Field	Size	Legal values
Year	12 bits	0..4095
Month	4 bits	1..12
Day	5 bits	1..[28,29,30,31], depending on the month
Day of Week	3 bits	0..6. Sunday = 0
Hour	5 bits	0..23
Minute	6 bits	0..59
Seconds	6 bits	0..59

The RTC does not check that the programmed values are in range. Illegal values may cause unexpected behaviour.

4.8.1.1. Day of the week

Day of the week is encoded as Sun 0, Mon 1, …, Sat 6 (i.e. ISO8601 mod 7).

There is no built-in calendar function. The RTC will not compute the correct day of the week; it will only increment the existing value.

4.8.2. Leap year

If the current value of `YEAR` in SETUP_0 is evenly divisible by 4, a leap year is detected, and Feb 28th is followed by Feb 29th instead of March 1st. Since this is not always true (century years for example), the leap year checking can be forced off by setting CTRL.FORCE_NOTLEAPYEAR.

NOTE

The leap year check is done only when needed (the second following Feb 28, 23:59:59). The software can set `FORCE_NOTLEAPYEAR` anytime after 2096 Mar 1 00:00:00 as long as it arrives before 2100 Feb 28 23:59:59 (i.e. taking into account the clock domain crossing latency)

4.8.3. Interrupts

The RTC can generate an interrupt at a configured time. There is a global bit, `MATCH_ENA` in IRQ_SETUP_0 to enable this feature, and individual enables for each time field (year, month, day, day-of-the-week, hour, minute, second). The individual enables can be used to implement repeating interrupts at specified times.

The alarm interrupt is sent to the processors and also to the ROSC and XOSC to wake them from dormant mode. See Section 4.8.5.5 for more information on dormant mode.

4.8.4. Reference clock

The RTC uses a reference clock `clk_rtc`, which should be any integer frequency in the range 1…65536Hz.

The internal 1Hz reference is created by an internal clock divider which divides `clk_rtc` by an integer value. The divide value minus 1 is set in CLKDIV_M1.

WARNING

While it is possible to change CLKDIV_M1 while the RTC is enabled, it is not recommended.

clk_rtc can be driven either from an internal or external clock source. Those sources can be prescaled, using a fractional divider (see Section 2.15).

Examples of possible clock sources include:

- XOSC @ 12MHz / 256 = 46875Hz. To get a 1Hz reference CLKDIV_M1 should be set to 46874.
- An external reference from a GPS, which generates one pulse per second. Configure clk_rtc to run from the GPIN0 clock source from GPIO pin 20. In this case, the clk_rtc divider is 1 and the internal RTC clock divider is also 1 (i.e. CLKDIV_M1 = 0).

NOTE

All RTC register reads and writes are done from the processor clock domain clk_sys. All data are synchronised back and forth between the domains. Writing to the RTC will take 2 clk_rtc clock periods to arrive, additional to the clk_sys domain. This should be taken into account especially when the reference is slow (e.g. 1Hz).

4.8.5. Programmer's Model

There are three setup tasks:

- Set the 1 sec reference
- Set the clock
- Set an alarm

4.8.5.1. Configuring the 1 second reference clock:

Select the source for clk_rtc. This is done outside the RTC registers (see Section 4.8.4).

SDK: https://github.com/raspberrypi/pico-sdk/blob/master/src/rp2_common/hardware_rtc/rtc.c Lines 22 - 39

```
22 void rtc_init(void) {
23     // Get clk_rtc freq and make sure it is running
24     uint rtc_freq = clock_get_hz(clk_rtc);
25     assert(rtc_freq != 0);
26
27     // Take rtc out of reset now that we know clk_rtc is running
28     reset_unreset_block_num_wait_blocking(RESET_RTC);
29
30     // Set up the 1 second divider.
31     // If rtc_freq is 400 then clkdiv_m1 should be 399
32     rtc_freq -= 1;
33
34     // Check the freq is not too big to divide
35     assert(rtc_freq <= RTC_CLKDIV_M1_BITS);
36
37     // Write divide value
38     rtc_hw->clkdiv_m1 = rtc_freq;
39 }
```

4.8.5.2. Setting up the clock

SDK: https://github.com/raspberrypi/pico-sdk/blob/master/src/rp2_common/hardware_rtc/rtc.c Lines 54 - 85

```
54 bool rtc_set_datetime(const datetime_t *t) {
55     if (!valid_datetime(t)) {
56         return false;
57     }
58
59     // Disable RTC
60     rtc_hw->ctrl = 0;
61     // Wait while it is still active
62     while (rtc_running()) {
63         tight_loop_contents();
64     }
65
66     // Write to setup registers
67     rtc_hw->setup_0 = (((uint32_t)t->year)  << RTC_SETUP_0_YEAR_LSB ) |
68                       (((uint32_t)t->month) << RTC_SETUP_0_MONTH_LSB) |
69                       (((uint32_t)t->day)   << RTC_SETUP_0_DAY_LSB);
70     rtc_hw->setup_1 = (((uint32_t)t->dotw)  << RTC_SETUP_1_DOTW_LSB) |
71                       (((uint32_t)t->hour)  << RTC_SETUP_1_HOUR_LSB) |
72                       (((uint32_t)t->min)   << RTC_SETUP_1_MIN_LSB)  |
73                       (((uint32_t)t->sec)   << RTC_SETUP_1_SEC_LSB);
74
75     // Load setup values into rtc clock domain
76     rtc_hw->ctrl = RTC_CTRL_LOAD_BITS;
77
78     // Enable RTC and wait for it to be running
79     rtc_hw->ctrl = RTC_CTRL_RTC_ENABLE_BITS;
80     while (!rtc_running()) {
81         tight_loop_contents();
82     }
83
84     return true;
85 }
```

NOTE

It is possible to change the current time while the RTC is running. Write the desired values, then set the LOAD bit in the CTRL register.

4.8.5.3. Reading the current time

The RTC time is stored across two 32-bit registers. To ensure a consistent value, RTC_0 should be read before RTC_1. Reading RTC_0 latches the value of RTC_1.

SDK: https://github.com/raspberrypi/pico-sdk/blob/master/src/rp2_common/hardware_rtc/rtc.c Lines 87 - 106

```
87 bool rtc_get_datetime(datetime_t *t) {
88     // Make sure RTC is running
89     if (!rtc_running()) {
90         return false;
91     }
92
93     // Note: RTC_0 should be read before RTC_1
94     uint32_t rtc_0 = rtc_hw->rtc_0;
95     uint32_t rtc_1 = rtc_hw->rtc_1;
```

```
 96
 97     t->dotw  = (int8_t) ((rtc_0 & RTC_RTC_0_DOTW_BITS ) >> RTC_RTC_0_DOTW_LSB);
 98     t->hour  = (int8_t) ((rtc_0 & RTC_RTC_0_HOUR_BITS ) >> RTC_RTC_0_HOUR_LSB);
 99     t->min   = (int8_t) ((rtc_0 & RTC_RTC_0_MIN_BITS  ) >> RTC_RTC_0_MIN_LSB);
100     t->sec   = (int8_t) ((rtc_0 & RTC_RTC_0_SEC_BITS  ) >> RTC_RTC_0_SEC_LSB);
101     t->year  = (int16_t) ((rtc_1 & RTC_RTC_1_YEAR_BITS ) >> RTC_RTC_1_YEAR_LSB);
102     t->month = (int8_t) ((rtc_1 & RTC_RTC_1_MONTH_BITS) >> RTC_RTC_1_MONTH_LSB);
103     t->day   = (int8_t) ((rtc_1 & RTC_RTC_1_DAY_BITS  ) >> RTC_RTC_1_DAY_LSB);
104
105     return true;
106 }
```

4.8.5.4. Configuring an Alarm

SDK: https://github.com/raspberrypi/pico-sdk/blob/master/src/rp2_common/hardware_rtc/rtc.c Lines 146 - 182

```
146 void rtc_set_alarm(const datetime_t *t, rtc_callback_t user_callback) {
147     rtc_disable_alarm();
148
149     // Only add to setup if it isn't -1
150     rtc_hw->irq_setup_0 = ((t->year  < 0) ? 0 : (((uint32_t)t->year)  <<
    RTC_IRQ_SETUP_0_YEAR_LSB )) |
151                           ((t->month < 0) ? 0 : (((uint32_t)t->month) <<
    RTC_IRQ_SETUP_0_MONTH_LSB)) |
152                           ((t->day   < 0) ? 0 : (((uint32_t)t->day)   <<
    RTC_IRQ_SETUP_0_DAY_LSB  ));
153     rtc_hw->irq_setup_1 = ((t->dotw  < 0) ? 0 : (((uint32_t)t->dotw)  <<
    RTC_IRQ_SETUP_1_DOTW_LSB)) |
154                           ((t->hour  < 0) ? 0 : (((uint32_t)t->hour)  <<
    RTC_IRQ_SETUP_1_HOUR_LSB)) |
155                           ((t->min   < 0) ? 0 : (((uint32_t)t->min)   <<
    RTC_IRQ_SETUP_1_MIN_LSB )) |
156                           ((t->sec   < 0) ? 0 : (((uint32_t)t->sec)   <<
    RTC_IRQ_SETUP_1_SEC_LSB ));
157
158     // Set the match enable bits for things we care about
159     if (t->year  >= 0) hw_set_bits(&rtc_hw->irq_setup_0, RTC_IRQ_SETUP_0_YEAR_ENA_BITS);
160     if (t->month >= 0) hw_set_bits(&rtc_hw->irq_setup_0, RTC_IRQ_SETUP_0_MONTH_ENA_BITS);
161     if (t->day   >= 0) hw_set_bits(&rtc_hw->irq_setup_0, RTC_IRQ_SETUP_0_DAY_ENA_BITS);
162     if (t->dotw  >= 0) hw_set_bits(&rtc_hw->irq_setup_1, RTC_IRQ_SETUP_1_DOTW_ENA_BITS);
163     if (t->hour  >= 0) hw_set_bits(&rtc_hw->irq_setup_1, RTC_IRQ_SETUP_1_HOUR_ENA_BITS);
164     if (t->min   >= 0) hw_set_bits(&rtc_hw->irq_setup_1, RTC_IRQ_SETUP_1_MIN_ENA_BITS);
165     if (t->sec   >= 0) hw_set_bits(&rtc_hw->irq_setup_1, RTC_IRQ_SETUP_1_SEC_ENA_BITS);
166
167     // Does it repeat? I.e. do we not match on any of the bits
168     _alarm_repeats = rtc_alarm_repeats(t);
169
170     // Store function pointer we can call later
171     _callback = user_callback;
172
173     irq_set_exclusive_handler(RTC_IRQ, rtc_irq_handler);
174
175     // Enable the IRQ at the peri
176     rtc_hw->inte = RTC_INTE_RTC_BITS;
177
178     // Enable the IRQ at the proc
179     irq_set_enabled(RTC_IRQ, true);
180
181     rtc_enable_alarm();
```

```
182 }
```

NOTE

Recurring alarms can be created by using fewer enable bits when setting up the alarm interrupt. For example, if you only matched on seconds and the second was configured as 54 then the alarm interrupt would fire once a minute when the second was 54.

4.8.5.5. Interaction with Dormant / Sleep mode

RP2040 supports two power saving levels:

- Sleep mode, where the processors are asleep and the unused clocks in the chip are stopped (see Section 2.15.3.5)
- Dormant mode, where all clocks in the chip are stopped

The RTC can wake the chip up from both of these modes. In sleep mode, RP2040 can be configured such that only `clk_rtc` (a slow RTC reference clock) is running, as well as a small amount of logic that allows the processor to wake back up. The processor is woken from sleep mode when the RTC alarm interrupt fires. See Section 2.11.5.1 for more information.

To wake the chip from dormant mode:

- the RTC must be configured to use an external reference clock (supplied by a GPIO pin)
- Set up the RTC to run on an external reference
- If the processor is running off the PLL, change it to run from XOSC/ROSC
- Turn off the PLLs
- Set up the RTC with the desired wake up time (one off, or recurring)
- (optionally) power down most memories
- Invoke DORMANT mode (see Section 2.16, Section 2.17, and Section 2.11.5.2 for more information)

4.8.6. List of Registers

The RTC registers start at a base address of `0x4005c000` (defined as RTC_BASE in SDK).

Table 552. List of RTC registers

Offset	Name	Info
0x00	CLKDIV_M1	Divider minus 1 for the 1 second counter. Safe to change the value when RTC is not enabled.
0x04	SETUP_0	RTC setup register 0
0x08	SETUP_1	RTC setup register 1
0x0c	CTRL	RTC Control and status
0x10	IRQ_SETUP_0	Interrupt setup register 0
0x14	IRQ_SETUP_1	Interrupt setup register 1
0x18	RTC_1	RTC register 1.
0x1c	RTC_0	RTC register 0 Read this before RTC 1!
0x20	INTR	Raw Interrupts
0x24	INTE	Interrupt Enable

Offset	Name	Info
0x28	INTF	Interrupt Force
0x2c	INTS	Interrupt status after masking & forcing

RTC: CLKDIV_M1 Register

Offset: 0x00

Table 553. CLKDIV_M1 Register

Bits	Description	Type	Reset
31:16	Reserved.	-	-
15:0	Divider minus 1 for the 1 second counter. Safe to change the value when RTC is not enabled.	RW	0x0000

RTC: SETUP_0 Register

Offset: 0x04

Description

RTC setup register 0

Table 554. SETUP_0 Register

Bits	Description	Type	Reset
31:24	Reserved.	-	-
23:12	**YEAR**: Year	RW	0x000
11:8	**MONTH**: Month (1..12)	RW	0x0
7:5	Reserved.	-	-
4:0	**DAY**: Day of the month (1..31)	RW	0x00

RTC: SETUP_1 Register

Offset: 0x08

Description

RTC setup register 1

Table 555. SETUP_1 Register

Bits	Description	Type	Reset
31:27	Reserved.	-	-
26:24	**DOTW**: Day of the week: 1-Monday…0-Sunday ISO 8601 mod 7	RW	0x0
23:21	Reserved.	-	-
20:16	**HOUR**: Hours	RW	0x00
15:14	Reserved.	-	-
13:8	**MIN**: Minutes	RW	0x00
7:6	Reserved.	-	-
5:0	**SEC**: Seconds	RW	0x00

RTC: CTRL Register

Offset: 0x0c

Description

RTC Control and status

Table 556. CTRL Register

Bits	Description	Type	Reset
31:9	Reserved.	-	-
8	**FORCE_NOTLEAPYEAR**: If set, leapyear is forced off. Useful for years divisible by 100 but not by 400	RW	0x0
7:5	Reserved.	-	-
4	**LOAD**: Load RTC	SC	0x0
3:2	Reserved.	-	-
1	**RTC_ACTIVE**: RTC enabled (running)	RO	-
0	**RTC_ENABLE**: Enable RTC	RW	0x0

RTC: IRQ_SETUP_0 Register

Offset: 0x10

Description

Interrupt setup register 0

Table 557. IRQ_SETUP_0 Register

Bits	Description	Type	Reset
31:30	Reserved.	-	-
29	**MATCH_ACTIVE**	RO	-
28	**MATCH_ENA**: Global match enable. Don't change any other value while this one is enabled	RW	0x0
27	Reserved.	-	-
26	**YEAR_ENA**: Enable year matching	RW	0x0
25	**MONTH_ENA**: Enable month matching	RW	0x0
24	**DAY_ENA**: Enable day matching	RW	0x0
23:12	**YEAR**: Year	RW	0x000
11:8	**MONTH**: Month (1..12)	RW	0x0
7:5	Reserved.	-	-
4:0	**DAY**: Day of the month (1..31)	RW	0x00

RTC: IRQ_SETUP_1 Register

Offset: 0x14

Description

Interrupt setup register 1

Table 558. IRQ_SETUP_1 Register

Bits	Description	Type	Reset
31	**DOTW_ENA**: Enable day of the week matching	RW	0x0
30	**HOUR_ENA**: Enable hour matching	RW	0x0
29	**MIN_ENA**: Enable minute matching	RW	0x0
28	**SEC_ENA**: Enable second matching	RW	0x0

Bits	Description	Type	Reset
27	Reserved.	-	-
26:24	**DOTW**: Day of the week	RW	0x0
23:21	Reserved.	-	-
20:16	**HOUR**: Hours	RW	0x00
15:14	Reserved.	-	-
13:8	**MIN**: Minutes	RW	0x00
7:6	Reserved.	-	-
5:0	**SEC**: Seconds	RW	0x00

RTC: RTC_1 Register

Offset: 0x18

Description

RTC register 1.

Table 559. RTC_1 Register

Bits	Description	Type	Reset
31:24	Reserved.	-	-
23:12	**YEAR**: Year	RO	-
11:8	**MONTH**: Month (1..12)	RO	-
7:5	Reserved.	-	-
4:0	**DAY**: Day of the month (1..31)	RO	-

RTC: RTC_0 Register

Offset: 0x1c

Description

RTC register 0
Read this before RTC 1!

Table 560. RTC_0 Register

Bits	Description	Type	Reset
31:27	Reserved.	-	-
26:24	**DOTW**: Day of the week	RF	-
23:21	Reserved.	-	-
20:16	**HOUR**: Hours	RF	-
15:14	Reserved.	-	-
13:8	**MIN**: Minutes	RF	-
7:6	Reserved.	-	-
5:0	**SEC**: Seconds	RF	-

RTC: INTR Register

Offset: 0x20

Description

Raw Interrupts

Table 561. INTR Register

Bits	Description	Type	Reset
31:1	Reserved.	-	-
0	**RTC**	RO	0x0

RTC: INTE Register

Offset: 0x24

Description

Interrupt Enable

Table 562. INTE Register

Bits	Description	Type	Reset
31:1	Reserved.	-	-
0	**RTC**	RW	0x0

RTC: INTF Register

Offset: 0x28

Description

Interrupt Force

Table 563. INTF Register

Bits	Description	Type	Reset
31:1	Reserved.	-	-
0	**RTC**	RW	0x0

RTC: INTS Register

Offset: 0x2c

Description

Interrupt status after masking & forcing

Table 564. INTS Register

Bits	Description	Type	Reset
31:1	Reserved.	-	-
0	**RTC**	RO	0x0

4.9. ADC and Temperature Sensor

RP2040 has an internal analogue-digital converter (ADC) with the following features:

- SAR ADC (see Section 4.9.2)
- 500ksps (using an independent 48MHz clock)
- 12-bit with 8.7 ENOB (see Section 4.9.3)
- Five input mux:
  - Four inputs that are available on package pins shared with GPIO[29:26]

- One input is dedicated to the internal temperature sensor (see Section 4.9.5)

- Eight element receive sample FIFO
- Interrupt generation
- DMA interface (see Section 4.9.2.5)

Figure 114. ADC Connection Diagram

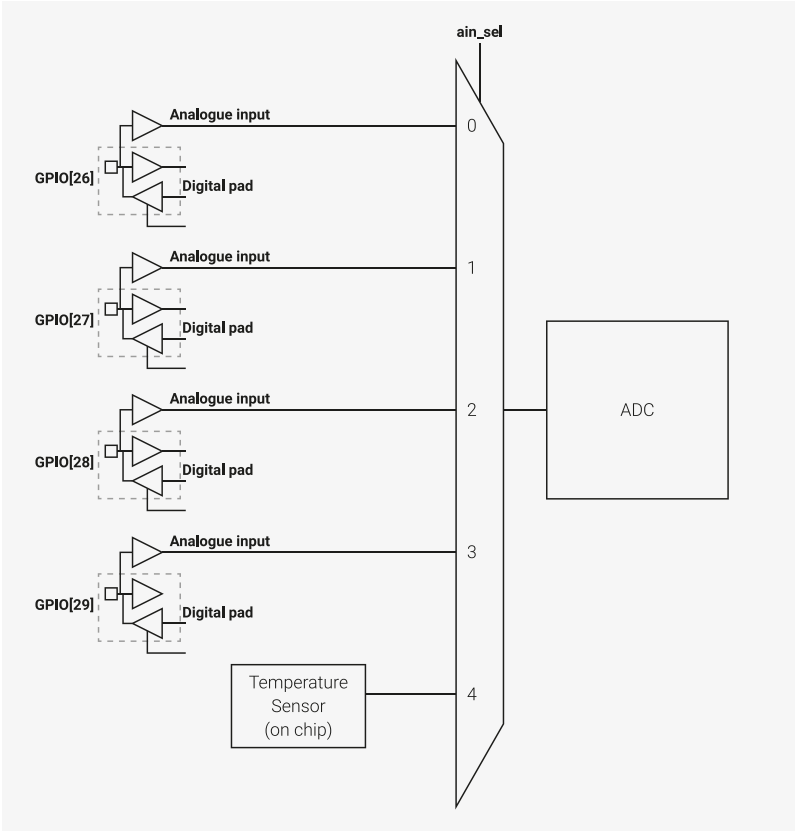

NOTE

When using an ADC input shared with a GPIO pin, the pin's digital functions must be disabled by setting `IE` low and `OD` high in the pin's pad control register. See Section 2.19.6.3, "Pad Control - User Bank" for details. The maximum ADC input voltage is determined by the digital IO supply voltage (IOVDD), not the ADC supply voltage (ADC_AVDD). For example, if IOVDD is powered at 1.8V, the voltage on the ADC inputs should not exceed 1.8V even if ADC_AVDD is powered at 3.3V. Voltages greater than IOVDD will result in leakage currents through the ESD protection diodes. See Section 5.5.3, "Pin Specifications" for details.

4.9.1. ADC controller

A digital controller manages the details of operating the RP2040 ADC, and provides additional functionality:

- One-shot or free-running capture mode
- Sample FIFO with DMA interface
- Pacing timer (16 integer bits, 8 fractional bits) for setting free-running sample rate
- Round-robin sampling of multiple channels in free-running capture mode
- Optional right-shift to 8 bits in free-running capture mode, so samples can be DMA'd to a byte buffer in system memory

4.9.2. SAR ADC

The SAR ADC (Successive Approximation Register Analogue to Digital Converter) is a combination of digital controller, and analogue circuit as shown in Figure 115.

Figure 115. SAR ADC Block diagram

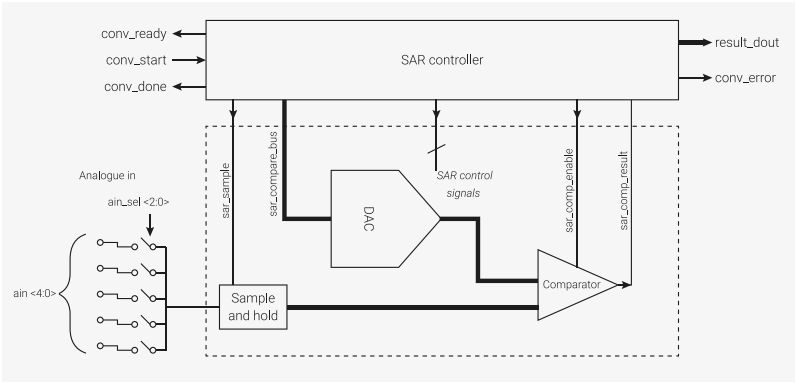

The ADC requires a 48MHz clock (`clk_adc`), which could come from the USB PLL. Capturing a sample takes 96 clock cycles (96 × 1/48MHz) = 2µs per sample (500ksps). The clock must be set up correctly before enabling the ADC.

Once the ADC block is provided with a clock, and its reset has been removed, writing a 1 to CS.EN will start a short internal power-up sequence for the ADC's analogue hardware. After a few clock cycles, CS.READY will go high, indicating the ADC is ready to start its first conversion.

The ADC can be disabled again at any time by clearing CS.EN, to save power. CS.EN does **not** enable the temperature sensor bias source (see Section 4.9.5). This is controlled separately.

The ADC input is capacitive, and when sampling, it places about 1pF across the input (there will be additional capacitance from outside the ADC, such as packaging and PCB routing, to add to this). The effective impedance, even when sampling at 500ksps, is over 100kΩ, and for DC measurements there should be no need to buffer.

4.9.2.1. One-shot Sample

Writing a 1 to CS.START_ONCE will immediately start a new conversion. CS.READY will go low, to show that a conversion is currently in progress. After 96 cycles of clk_adc, CS.READY will go high. The 12-bit conversion result is available in RESULT.

The ADC input to be sampled is selected by writing to CS.AINSEL, any time before the conversion starts. An AINSEL value of 0…3 selects the ADC input on GPIO 26…29. AINSEL of 4 selects the internal temperature sensor.

NOTE

No settling time is required when switching AINSEL.

4.9.2.2. Free-running Sampling

When CS.START_MANY is set,the ADC will automatically start new conversions at regular intervals. The most recent conversion result is always available in RESULT, but for IRQ or DMA driven streaming of samples, the ADC FIFO must be enabled (Section 4.9.2.4).

By default (DIV = 0), new conversions start immediately upon the previous conversion finishing, so a new sample is produced every 96 cycles. At a clock frequency of 48MHz, this produces 500ksps.

Setting DIV.INT to some positive value *n* will trigger the ADC once per *n* + 1 cycles, though the ADC ignores this if a conversion is currently in progress, so generally *n* will be >= 96. For example, setting DIV.INT to 47999 will run the ADC at 1ksps, if running from a 48MHz clock.

The pacing timer supports fractional-rate division (first order delta sigma). When setting DIV.FRAC to a nonzero value,

the ADC will start a new conversion once per $1 + \mathrm{INT} + \frac{\mathrm{FRAC}}{256}$ cycles on average, by changing the sample interval between $\mathrm{INT} + 1$ and $\mathrm{INT} + 2$.

4.9.2.3. Sampling Multiple Inputs

CS.RROBIN allows the ADC to sample multiple inputs, in an interleaved fashion, while performing free-running sampling. Each bit in RROBIN corresponds to one of the five possible values of CS.AINSEL. When the ADC completes a conversion, CS.AINSEL will automatically cycle to the next input whose corresponding bit is set in RROBIN.

The round-robin sampling feature is disabled by writing all-zeroes to CS.RROBIN.

For example, if AINSEL is initially `0`, and RROBIN is set to `0x06` (bits 1 and 2 are set), the ADC will sample channels in the following order:

1. Channel 0
2. Channel 1
3. Channel 2
4. Channel 1
5. Channel 2
6. Channel 1…

NOTE

The initial value of AINSEL does not need to correspond with a set bit in RROBIN.

4.9.2.4. Sample FIFO

The ADC samples can be read directly from the RESULT register, or stored in a local 8-entry FIFO and read out from FIFO. FIFO operation is controlled by the FCS register.

If FCS.EN is set, the result of each ADC conversion is written to the FIFO. A software interrupt handler or the RP2040 DMA can read this sample from the FIFO when notified by the ADC's IRQ or DREQ signals. Alternatively, software can poll the status bits in FCS to wait for each sample to become available.

If the FIFO is full when a conversion completes, the sticky error flag FCS.OVER is set. The current FIFO contents are not changed by this event, but any conversion that completes whilst the FIFO is full will be lost.

There are two flags that control the data written to the FIFO by the ADC:

- FCS.SHIFT will right-shift the FIFO data to eight bits in size (i.e. FIFO bits 7:0 are conversion result bits 11:4). This is suitable for 8-bit DMA transfer to a byte buffer in memory, allowing deeper capture buffers, at the cost of some precision.
- FCS.ERR will set the FIFO.ERR flag of each FIFO value, showing that a conversion error took place, i.e. the SAR failed to converge (see below)

CAUTION

Conversion errors produce undefined results, and the corresponding sample should be discarded. They indicate that the comparison of one or more bits failed to complete in the time allowed. Normally this is caused by comparator metastability, i.e. the closer to the comparator threshold the input signal is, the longer it will take to make a decision. The high gain of the comparator reduces the probability that no decision is made.

4.9.2.5. DMA

The RP2040 DMA (Section 2.5) can fetch ADC samples from the sample FIFO, by performing a normal memory-mapped read on the FIFO register, paced by the ADC_DREQ system data request signal. The following must be considered:

- The sample FIFO must be enabled (FCS.EN) so that samples are written to it; the FIFO is disabled by default so that it does not inadvertently fill when the ADC is used for one-shot conversions.
- The ADC's data request handshake (DREQ) must be enabled, via FCS.DREQ_EN.
- The DMA channel used for the transfer must select the DREQ_ADC data request signal (Section 2.5.3.1).
- The threshold for DREQ assertion (FCS.THRESH) should be set to 1, so that the DMA transfers as soon as a single sample is present in the FIFO. Note this is also the threshold used for IRQ assertion, so non-DMA use cases might prefer a higher value for less frequent interrupts.
- If the DMA transfer size is set to 8 bits, so that the DMA transfers to a byte array in memory, FCS.SHIFT must also be set, to pre-shift the FIFO samples to 8 bits of significance.
- If multiple input channels are to be sampled, CS.RROBIN contains a 5-bit mask of those channels (4 external inputs plus temperature sensor). Additionally CS.AINSEL must select the channel for the first sample.
- The ADC sample rate (Section 4.9.2.2) should be configured before starting the ADC.

Once the ADC is suitably configured, the DMA channel should be started first, and the ADC conversion should be started second, via CS.START_MANY. Once the DMA completes, the ADC can be halted, or a new DMA transfer promptly started. After clearing CS.START_MANY to halt the ADC, software should also poll CS.READY to make sure the last conversion has finished, and then drain any stray samples from the FIFO.

4.9.2.6. Interrupts

An interrupt can be generated when the FIFO level reaches a configurable threshold FCS.THRESH. The interrupt output must be enabled via INTE.

Status can be read from INTS. The interrupt is cleared by draining the FIFO to a level lower than FCS.THRESH.

4.9.2.7. Supply

The ADC supply is separated out on its own pin to allow noise filtering.

4.9.3. ADC ENOB

The ADC was characterised and the ENOB of the ADC was measured. Testing was carried out at room temperature across silicon lots, with tests being done on 3 typical (tt) as well as 3 fast (ff) and 3 slow (ss) corner RP2040 devices. The typical, minimum, and maximum values in Table 566 reflect the silicon used in the testing.

Table 565. Parameters used during the testing.

Parameter	Value
Sample rate	250ksps

Parameter	Value
FFT window	5 term Blackman-Harris
FFT bins	4,096
FFT averaging	none
Input level min	1
Input level max	4,094
Input frequency	997Hz

It should be noted that THD is normally calculated using the first 5 or 6 harmonics. However as INL/DNL errors (see Section 4.9.4) create more than this, the first 30 peaks are used. This makes the THD value slightly worse, but more representative of reality.

Table 566. Results for various parts tested (fast, slow, and typical).

	Min	Typical	Max
THD[1]	-55.6dB	55dB	-54.4dB
SNR	60.9dB	61.5dB	62.0dB
SFDR	59.2dB	59.9dB	60.5dB
SINAD	53.6dB	54.0dB	54.6dB
ENOB	8.6	8.7	8.8

[1] *As the INL creates a large number of harmonics, the highest 30 peaks were used. This is different from conventional calculations of THD.*

IMPORTANT

Testing was carried out using a board with a low-noise on-board voltage reference as, when characterising the ADC, it is important that there are no other noise sources affecting the measurements.

4.9.4. INL and DNL

Integral Non-Linearity (INL) and Differential Non-Linearity (DNL) are used to measure the error of the quantisation of the incoming signal that the ADC generates. In an ideal ADC the input-to-output transfer function should have a linear quantised transfer between the analogue input signal and the digitised output signal. The RP2040 ADC INL values for each binary result are shown in Figure 116, illustrating that the error is a sawtooth rather than the expected curve.

Figure 116. ATE machine results for INL (RP2040).

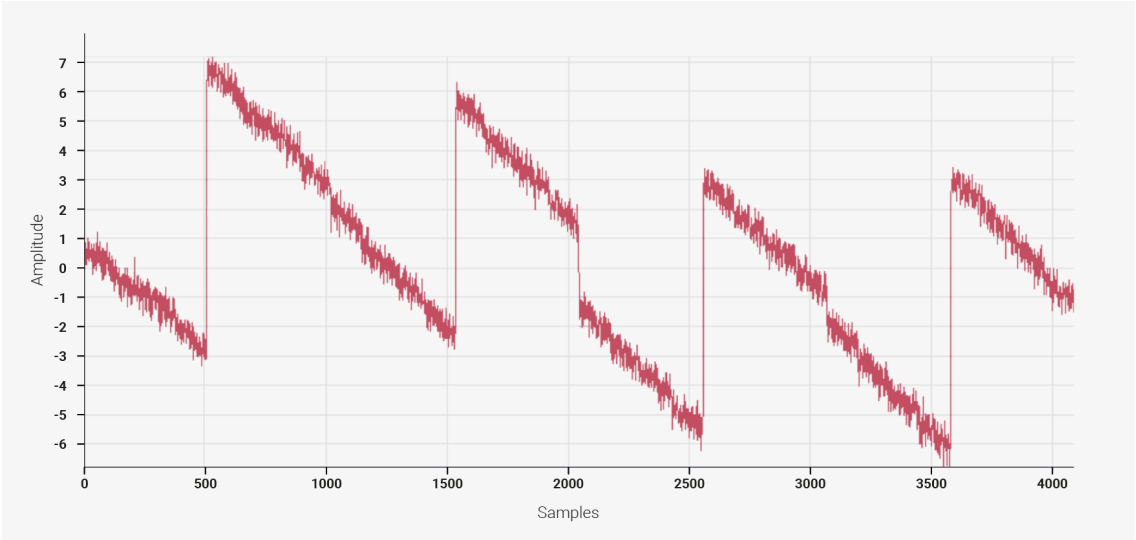

Nominally an ADC moves from one digital value to the next digital value, colloquially expressed as “no missing codes”. However, if the ADC skips a value bin this would cause a spike in the Differential Non-Linearity (DNL) error. These types of error often only occur at specific codes due to the design of the ADC.

The RP2040 ADC has a DNL which is mostly flat, and below 1 LSB. However at four values — 512, 1,536, 2,560, and 3,584 — the ADC’s DNL error peaks, see Figure 117

Figure 117. ATE machine results for DNL (RP2040).

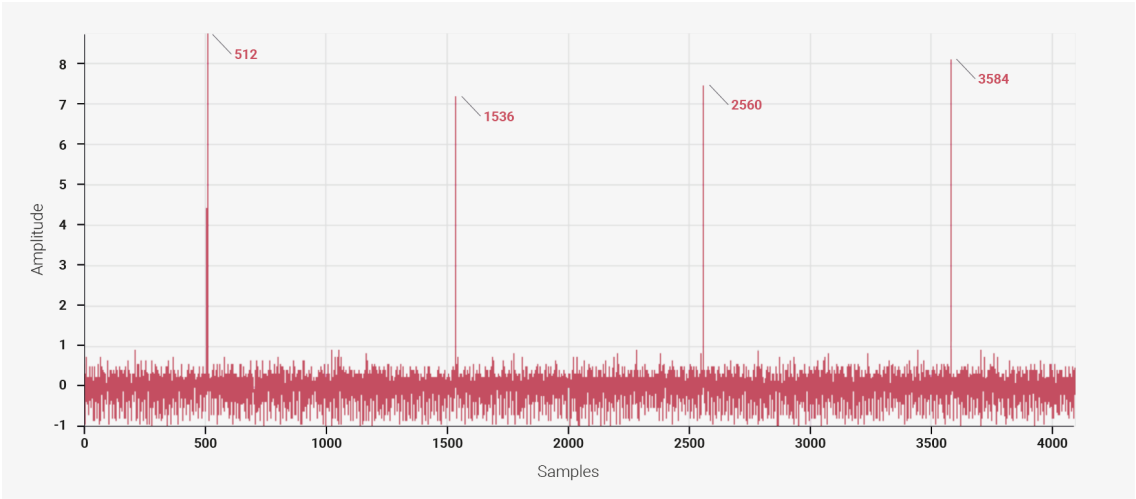

The INL and DNL errors come from an error in the scaling of some internal capacitors of the ADC. These capacitors are small in value (only tens of femto Farads) and at these very small values, chip simulation of these capacitors can deviate slightly from reality. If these capacitors had matched correctly, the ADCs performance could have been better.

These INL and DNL errors will somewhat limit the performance of the ADC dependent on use case (See Errata RP2040-E11).

4.9.5. Temperature Sensor

The temperature sensor measures the Vbe voltage of a biased bipolar diode, connected to the fifth ADC channel (AINSEL=4). Typically, Vbe = 0.706V at 27 degrees C, with a slope of -1.721mV per degree. Therefore the temperature can be approximated as follows:

T = 27 - (ADC_voltage - 0.706)/0.001721

As the Vbe and the Vbe slope can vary over the temperature range, and from device to device, some user calibration may be required if accurate measurements are required.

The temperature sensor's bias source must be enabled before use, via CS.TS_EN. This increases current consumption on ADC_AVDD by approximately 40µA.

NOTE

The on board temperature sensor is very sensitive to errors in the reference voltage. If the ADC returns a value of 891 this would correspond to a temperature of 20.1°C. However if the reference voltage is 1% lower than 3.3V then the same reading of 891 would correspond to 24.3°C. You would see a change in temperature of over 4°C for a small 1% change in reference voltage. Therefore if you want to improve the accuracy of the internal temperature sensor it is worth considering adding an external reference voltage.

NOTE

The INL errors, see Section 4.9.4, aren't in the usable temperature range of the ADC.

4.9.6. List of Registers

The ADC registers start at a base address of `0x4004c000` (defined as ADC_BASE in SDK).

Table 567. List of ADC registers

Offset	Name	Info
0x00	CS	ADC Control and Status
0x04	RESULT	Result of most recent ADC conversion
0x08	FCS	FIFO control and status
0x0c	FIFO	Conversion result FIFO
0x10	DIV	Clock divider. If non-zero, CS_START_MANY will start conversions at regular intervals rather than back-to-back. The divider is reset when either of these fields are written. Total period is 1 + INT + FRAC / 256
0x14	INTR	Raw Interrupts
0x18	INTE	Interrupt Enable
0x1c	INTF	Interrupt Force
0x20	INTS	Interrupt status after masking & forcing

ADC: CS Register

Offset: 0x00

Description

ADC Control and Status

Table 568. CS Register

Bits	Description	Type	Reset
31:21	Reserved.	-	-
20:16	**RROBIN**: Round-robin sampling. 1 bit per channel. Set all bits to 0 to disable. Otherwise, the ADC will cycle through each enabled channel in a round-robin fashion. The first channel to be sampled will be the one currently indicated by AINSEL. AINSEL will be updated after each conversion with the newly-selected channel.	RW	0x00
15	Reserved.	-	-

Bits	Description	Type	Reset
14:12	**AINSEL**: Select analog mux input. Updated automatically in round-robin mode.	RW	0x0
11	Reserved.	-	-
10	**ERR_STICKY**: Some past ADC conversion encountered an error. Write 1 to clear.	WC	0x0
9	**ERR**: The most recent ADC conversion encountered an error; result is undefined or noisy.	RO	0x0
8	**READY**: 1 if the ADC is ready to start a new conversion. Implies any previous conversion has completed. 0 whilst conversion in progress.	RO	0x0
7:4	Reserved.	-	-
3	**START_MANY**: Continuously perform conversions whilst this bit is 1. A new conversion will start immediately after the previous finishes.	RW	0x0
2	**START_ONCE**: Start a single conversion. Self-clearing. Ignored if start_many is asserted.	SC	0x0
1	**TS_EN**: Power on temperature sensor. 1 - enabled. 0 - disabled.	RW	0x0
0	**EN**: Power on ADC and enable its clock. 1 - enabled. 0 - disabled.	RW	0x0

ADC: RESULT Register

Offset: 0x04

Table 569. RESULT Register

Bits	Description	Type	Reset
31:12	Reserved.	-	-
11:0	Result of most recent ADC conversion	RO	0x000

ADC: FCS Register

Offset: 0x08

Description

FIFO control and status

Table 570. FCS Register

Bits	Description	Type	Reset
31:28	Reserved.	-	-
27:24	**THRESH**: DREQ/IRQ asserted when level >= threshold	RW	0x0
23:20	Reserved.	-	-
19:16	**LEVEL**: The number of conversion results currently waiting in the FIFO	RO	0x0
15:12	Reserved.	-	-
11	**OVER**: 1 if the FIFO has been overflowed. Write 1 to clear.	WC	0x0
10	**UNDER**: 1 if the FIFO has been underflowed. Write 1 to clear.	WC	0x0
9	**FULL**	RO	0x0
8	**EMPTY**	RO	0x0
7:4	Reserved.	-	-

Bits	Description	Type	Reset
3	**DREQ_EN**: If 1: assert DMA requests when FIFO contains data	RW	0x0
2	**ERR**: If 1: conversion error bit appears in the FIFO alongside the result	RW	0x0
1	**SHIFT**: If 1: FIFO results are right-shifted to be one byte in size. Enables DMA to byte buffers.	RW	0x0
0	**EN**: If 1: write result to the FIFO after each conversion.	RW	0x0

ADC: FIFO Register

Offset: 0x0c

Description

Conversion result FIFO

Table 571. FIFO Register

Bits	Description	Type	Reset
31:16	Reserved.	-	-
15	**ERR**: 1 if this particular sample experienced a conversion error. Remains in the same location if the sample is shifted.	RF	-
14:12	Reserved.	-	-
11:0	**VAL**	RF	-

ADC: DIV Register

Offset: 0x10

Description

Clock divider. If non-zero, CS_START_MANY will start conversions
at regular intervals rather than back-to-back.
The divider is reset when either of these fields are written.
Total period is 1 + INT + FRAC / 256

Table 572. DIV Register

Bits	Description	Type	Reset
31:24	Reserved.	-	-
23:8	**INT**: Integer part of clock divisor.	RW	0x0000
7:0	**FRAC**: Fractional part of clock divisor. First-order delta-sigma.	RW	0x00

ADC: INTR Register

Offset: 0x14

Description

Raw Interrupts

Table 573. INTR Register

Bits	Description	Type	Reset
31:1	Reserved.	-	-
0	**FIFO**: Triggered when the sample FIFO reaches a certain level. This level can be programmed via the FCS_THRESH field.	RO	0x0

ADC: INTE Register

Offset: 0x18

Description

Interrupt Enable

Table 574. INTE Register

Bits	Description	Type	Reset
31:1	Reserved.	-	-
0	**FIFO**: Triggered when the sample FIFO reaches a certain level. This level can be programmed via the FCS_THRESH field.	RW	0x0

ADC: INTF Register

Offset: 0x1c

Description

Interrupt Force

Table 575. INTF Register

Bits	Description	Type	Reset
31:1	Reserved.	-	-
0	**FIFO**: Triggered when the sample FIFO reaches a certain level. This level can be programmed via the FCS_THRESH field.	RW	0x0

ADC: INTS Register

Offset: 0x20

Description

Interrupt status after masking & forcing

Table 576. INTS Register

Bits	Description	Type	Reset
31:1	Reserved.	-	-
0	**FIFO**: Triggered when the sample FIFO reaches a certain level. This level can be programmed via the FCS_THRESH field.	RO	0x0

4.10. SSI

Synopsys Documentation

Synopsys Proprietary. Used with permission.

RP2040 has a Synchronous Serial Interface (SSI) controller which appears on the QSPI pins and is used to communicate with external Flash devices. The SSI forms part of the XIP block.

The SSI controller is based on a configuration of the Synopsys DW_apb_ssi IP (v4.01a).

4.10.1. Overview

In order for the DW_apb_ssi to connect to a serial-master or serial-slave peripheral device, the peripheral must have a least one of the following interfaces:

Motorola Serial Peripheral Interface (SPI)

A four-wire, full-duplex serial protocol from Motorola. There are four possible combinations for the serial clock phase and polarity. The clock phase (SCPH) determines whether the serial transfer begins with the falling edge of the slave select signal or the first edge of the serial clock. The slave select line is held high when the DW_apb_ssi is idle or disabled.

Texas Instruments Serial Protocol (SSP)

A four-wire, full-duplex serial protocol. The slave select line used for SPI and Microwire protocols doubles as the frame indicator for the SSP protocol.

National Semiconductor Microwire

A half-duplex serial protocol, which uses a control word transmitted from the serial master to the target serial slave.

You can program the FRF (frame format) bit field in the Control Register 0 (CTRLR0) to select which protocol is used.

The serial protocols supported by the DW_apb_ssi allow for serial slaves to be selected or addressed using either hardware or software. When implemented in hardware, serial slaves are selected under the control of dedicated hardware select lines. The number of select lines generated from the serial master is equal to the number of serial slaves present on the bus. The serial-master device asserts the select line of the target serial slave before data transfer begins. This architecture is illustrated in Figure 118.

When implemented in software, the input select line for all serial slave devices should originate from a single slave select output on the serial master. In this mode it is assumed that the serial master has only a single slave select output. If there are multiple serial masters in the system, the slave select output from all masters can be logically ANDed to generate a single slave select input for all serial slave devices. The main program in the software domain controls selection of the target slave device; this architecture is illustrated in Figure 118. Software would use the SSIENR register in all slaves in order to control which slave is to respond to the serial transfer request from the master device.

The DW_apb_ssi does not enforce hardware or software control for serial-slave device selection. You can configure the DW_apb_ssi for either implementation, illustrated in Figure 118.

Figure 118. Hardware/Software Slave Selection.

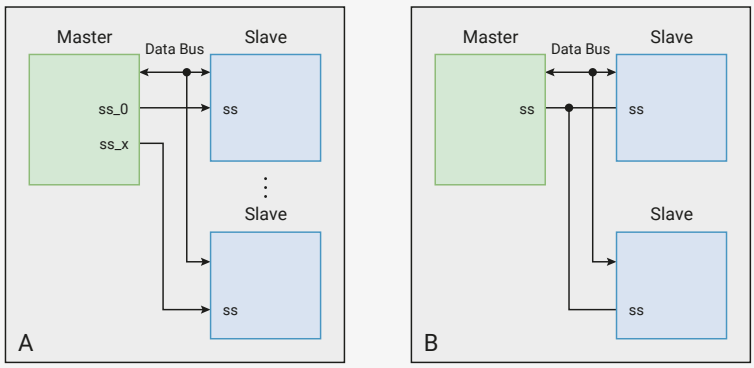

4.10.2. Features

The DW_apb_ssi is a configurable and programmable component that is a full-duplex master serial interface. The host processor accesses data, control, and status information on the DW_apb_ssi through the APB interface. The DW_apb_ssi also interfaces with the DMA Controller for bulk data transfer.

The DW_apb_ssi is configured as a serial master. The DW_apb_ssi can connect to any serial-slave peripheral device using one of the following interfaces:

- Motorola Serial Peripheral Interface (SPI)
- Texas Instruments Serial Protocol (SSP)
- National Semiconductor Microwire

On RP2040, the DW_apb_ssi is a component of the flash execute-in-place subsystem (see Section 2.6.3), and provides communication with an external SPI, dual-SPI or quad-SPI flash device.

4.10.2.1. IO connections

The SSI controller connects to the following pins:

- `QSPI_SCLK` Connected to output clock *sclk_out*
- `QSPI_SS_N` Connected to chip select *ss_o_n*
- `QSPI_SD[3:0]` Connected to data bus *txd* and *rxd*

Some pins on the IP are tied off as not used:

- *ss_in_n* is tied high

Clock connections are as follows:

- *pclk* and *sclk* are driven from `clk_sys`

4.10.3. IP Modifications

The following modifications were made to the Synopsys DW_apb_ssi hardware:

1. XIP accesses are byte-swapped, such that the least-addressed byte is in the least-significant position
2. When SPI_CTRLR0_INST_L is 0, the XIP instruction field is appended to the end of the address for XIP accesses, rather than prepended to the beginning
3. The reset value of `DMARDLR` is increased from 0 to 4. The SSI to DMA handshaking on RP2040 requests only single transfers or bursts of four, depending on whether the RX FIFO level has reached `DMARDLR`, so `DMARDLR` should not be changed from this value.

The first of these changes allows mixed-size accesses by a little-endian busmaster, such as the RP2040 DMA, or the Cortex-M0+ configuration used on RP2040. Note that this only applies to XIP accesses (RP2040 system addresses in the range `0x10000000` to `0x13ffffff`), not to direct access to the DW_apb_ssi FIFOs. When accessing the SSI directly, it may be necessary for software to swap bytes manually, or to use the RP2040 DMA's byte swap feature.

The second supports issuing of continuation bits following the XIP address, so that command-prefix-free XIP modes can be supported (e.g. `EBh` Quad I/O Fast Read on Winbond devices), for greater performance. For example, the following configuration would be used to issue a standard `03h` serial read command for each access to the XIP address window:

- SPI_CTRLR0_INST_L = 8 bits
- SPI_CTRLR0_ADDR_L = 24 bits
- SPI_CTRLR0_XIP_CMD = `0x03`

This will first issue eight command bits (`0x03`), then issue 24 address bits, then clock in the data bits. The configuration used for `EBh` quad read, after the flash has entered the XIP state, would be:

- SPI_CTRLR0_INST_L = 0
- SPI_CTRLR0_ADDR_L = 32 bits
- SPI_CTRLR0_XIP_CMD = `0xa0` (continuation code on W25Qx devices)

For each XIP access, the DW_apb_ssi will issue 32 "address" bits, consisting of the 24 LSBs of the RP2040 system bus

address, followed by the 8-bit continuation code `0xa0`. No command prefix is issued.

4.10.3.1. Example of Target Slave Selection Using Software

The following example is pseudo code that illustrates how to use software to select the target slave.

```
1 int main() {
2    disable_all_serial_devices(); ①
3    initialize_mst(ssi_mst_1); ②
4    initialize_slv(ssi_slv_1); ③
5    start_serial_xfer(ssi_mst_1); ④
6 }
```

① This function sets the SSI_EN bit to logic '0' in the SSIENR register of each device on the serial bus.

② This function initializes the master device for the serial transfer;

1. Write CTRLR0 to match the required transfer
2. If transfer is receive only write number of frames into CTRLR1
3. Write BAUDR to set the transfer baud rate.
4. Write TXFTLR and RXFTLR to set FIFO threshold levels
5. Write IMR register to set interrupt masks
6. Write SER register bit[0] to logic '1'
7. Write SSIENR register bit[0] to logic '1' to enable the master.

③ This function initializes the target slave device (slave 1 in this example) for the serial transfer;

1. Write CTRLR0 to match the required transfer
2. Write TXFTLR and RXFTLR to set FIFO threshold levels
3. Write IMR register to set interrupt masks
4. Write SSIENR register bit[0] to logic '1' to enable the slave.
5. If the slave is to transmit data, write data into TX FIFO Now the slave is enabled and awaiting an active level on its ss_in_n input port. Note all other serial slaves are disabled (SSI_EN=0) and therefore will not respond to an active level on their ss_in_n port.

④ This function begins the serial transfer by writing transmit data into the master's TX FIFO. User can poll the busy status with a function or use an ISR to determine when the serial transfer has completed.

4.10.4. Clock Ratios

The maximum frequency of the bit-rate clock (sclk_out) is one-half the frequency of ssi_clk. This allows the shift control logic to capture data on one clock edge of sclk_out and propagate data on the opposite edge.

Figure 119 illustrates the maximum ratio between sclk_out and ssi_clk.

Figure 119. Maximum sclk_out/ssi_clk Ratio.

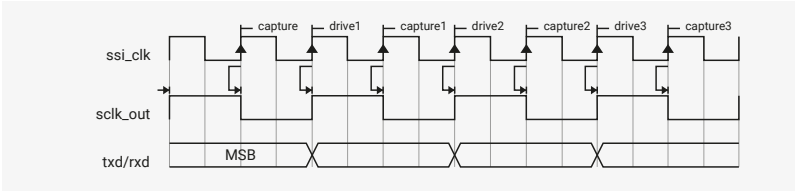

The sclk_out line toggles only when an active transfer is in progress. At all other times it is held in an inactive state, as defined by the serial protocol under which it operates.

The frequency of sclk_out can be derived from the following equation:

$$F_{sclk_out} = \frac{F_{ssi_clk}}{SCKDV}$$

SCKDV is a bit field in the programmable register BAUDR, holding any even value in the range 0 to 65,534. If SCKDV is 0, then sclk_out is disabled.

4.10.4.1. Frequency Ratio Summary

A summary of the frequency ratio restrictions between the bit-rate clock (sclk_out) and the DW_apb_ssi peripheral clock (ssi_clk) are as follows:

- $F_{ssi_clk} >= 2 \times (maximum F_{sclk_out})$

4.10.5. Transmit and Receive FIFO Buffers

The FIFO buffers used by the DW_apb_ssi are internal D-type flip-flops that are 16 entries deep. The width of both transmit and receive FIFO buffers is fixed at 32 bits, due to the serial specifications, which state that a serial transfer (data frame) can be 4 to 16/32 bits in length. Data frames that are less than 32 bits must be right-justified when written into the transmit FIFO buffer. The shift control logic automatically right-justifies receive data in the receive FIFO buffer.

Each data entry in the FIFO buffers contains a single data frame. It is impossible to store multiple data frames in a single FIFO location; for example, you may not store two 8-bit data frames in a single FIFO location. If an 8-bit data frame is required, the upper bits of the FIFO entry are ignored or unused when the serial shifter transmits the data.

NOTE

The transmit and receive FIFO buffers are cleared when the DW_apb_ssi is disabled (SSI_EN = 0) or when it is reset (presetn).

The transmit FIFO is loaded by APB write commands to the DW_apb_ssi data register (DR). Data are popped (removed) from the transmit FIFO by the shift control logic into the transmit shift register. The transmit FIFO generates a FIFO empty interrupt request (ssi_txe_intr) when the number of entries in the FIFO is less than or equal to the FIFO threshold value. The threshold value, set through the programmable register TXFTLR, determines the level of FIFO entries at which an interrupt is generated. The threshold value allows you to provide early indication to the processor that the transmit FIFO is nearly empty. A transmit FIFO overflow interrupt (ssi_txo_intr) is generated if you attempt to write data into an already full transmit FIFO.

Data are popped from the receive FIFO by APB read commands to the DW_apb_ssi data register (DR). The receive FIFO is loaded from the receive shift register by the shift control logic. The receive FIFO generates a FIFO-full interrupt request (ssi_rxf_intr) when the number of entries in the FIFO is greater than or equal to the FIFO threshold value plus one. The threshold value, set through programmable register RXFTLR, determines the level of FIFO entries at which an interrupt is generated.

The threshold value allows you to provide early indication to the processor that the receive FIFO is nearly full. A receive FIFO overrun interrupt (ssi_rxo_intr) is generated when the receive shift logic attempts to load data into a completely full receive FIFO. However, this newly received data are lost. A receive FIFO underflow interrupt (ssi_rxu_intr) is generated if

you attempt to read from an empty receive FIFO. This alerts the processor that the read data are invalid.

Table 577 provides description for different Transmit FIFO Threshold values.

Table 577. Transmit FIFO Threshold (TFT) Decode Values

TFT Value	Description
0000_0000	ssi_txe_intr is asserted when zero data entries are present in transmit FIFO
0000_0001	ssi_txe_intr is asserted when one or less data entry is present in transmit FIFO
0000_0010	ssi_txe_intr is asserted when two or less data entries are present in transmit FIFO
…	…
0000_1101	ssi_txe_intr is asserted when 13 or less data entries are present in transmit FIFO
0000_1110	ssi_txe_intr is asserted when 14 or less data entries are present in transmit FIFO
0000_1111	ssi_txe_intr is asserted when 15 or less data entries are present in transmit FIFO

Table 578 provides description for different Receive FIFO Threshold values.

Table 578. Receive FIFO Threshold (TFT) Decode Values

RFT Value	Description
0000_0000	ssi_rxf_intr is asserted when one or more data entry is present in receive FIFO
0000_0001	ssi_rxf_intr is asserted when two or more data entries are present in receive FIFO
0000_0010	ssi_rxf_intr is asserted when three or more data entries are present in receive FIFO
…	…
0000_1101	ssi_rxf_intr is asserted when 14 or more data entries are present in receive FIFO
0000_1110	ssi_rxf_intr is asserted when 15 or more data entries are present in receive FIFO
0000_1111	ssi_rxf_intr is asserted when 16 data entries are present in receive FIFO

4.10.6. 32-Bit Frame Size Support

The IP is configured to set the maximum programmable value in of data frame size to 32 bits. As a result the following features exist:

- dfs_32 (CTRLR0[20:16]) are valid, which contains the value of data frame size. The new register field holds the values 0 to 31. The dfs (CTRLR0[3:0]) is invalid and writing to this register has no effect.
- The receive and transmit FIFO widths are 32 bits.
- All 32 bits of the data register are valid.

4.10.7. SSI Interrupts

The DW_apb_ssi supports combined and individual interrupt requests, each of which can be masked. The combined interrupt request is the ORed result of all other DW_apb_ssi interrupts after masking. Only the combined interrupt request is routed to the Interrupt Controller. All DW_apb_ssi interrupts are level interrupts and are active high.

The DW_apb_ssi interrupts are described as follows:

Transmit FIFO Empty Interrupt (ssi_txe_intr)

Set when the transmit FIFO is equal to or below its threshold value and requires service to prevent an under-run. The threshold value, set through a software-programmable register, determines the level of transmit FIFO entries at which an interrupt is generated. This interrupt is cleared by hardware when data are written into the transmit FIFO buffer, bringing it over the threshold level.

Transmit FIFO Overflow Interrupt (ssi_txo_intr)

Set when an APB access attempts to write into the transmit FIFO after it has been completely filled. When set, data written from the APB is discarded. This interrupt remains set until you read the transmit FIFO overflow interrupt clear register (TXOICR).

Receive FIFO Full Interrupt (ssi_rxf_intr)

Set when the receive FIFO is equal to or above its threshold value plus 1 and requires service to prevent an overflow. The threshold value, set through a software-programmable register, determines the level of receive FIFO entries at which an interrupt is generated. This interrupt is cleared by hardware when data are read from the receive FIFO buffer, bringing it below the threshold level.

Receive FIFO Overflow Interrupt (ssi_rxo_intr)

Set when the receive logic attempts to place data into the receive FIFO after it has been completely filled. When set, newly received data are discarded. This interrupt remains set until you read the receive FIFO overflow interrupt clear register (RXOICR).

Receive FIFO Underflow Interrupt (ssi_rxu_intr)

Set when an APB access attempts to read from the receive FIFO when it is empty. When set, 0s are read back from the receive FIFO. This interrupt remains set until you read the receive FIFO underflow interrupt clear register (RXUICR).

Multi-Master Contention Interrupt (ssi_mst_intr)

Present only when the DW_apb_ssi component is configured as a serial-master device. The interrupt is set when another serial master on the serial bus selects the DW_apb_ssi master as a serial-slave device and is actively transferring data. This informs the processor of possible contention on the serial bus. This interrupt remains set until you read the multi-master interrupt clear register (MSTICR).

Combined Interrupt Request (ssi_intr)

OR'ed result of all the above interrupt requests after masking. To mask this interrupt signal, you must mask all other DW_apb_ssi interrupt requests.

4.10.8. Transfer Modes

When transferring data on the serial bus, the DW_apb_ssi operates in the modes discussed in this section. The transfer mode (TMOD) is set by writing to control register 0 (CTRLR0).

NOTE

The transfer mode setting does not affect the duplex of the serial transfer. TMOD is ignored for Microwire transfers, which are controlled by the MWCR register.

4.10.8.1. Transmit and Receive

When TMOD = `00b`, both transmit and receive logic are valid. The data transfer occurs as normal according to the selected frame format (serial protocol). Transmit data are popped from the transmit FIFO and sent through the txd line to the target device, which replies with data on the rxd line. The receive data from the target device is moved from the receive shift register into the receive FIFO at the end of each data frame.

4.10.8.2. Transmit Only

When TMOD = `01b`, the receive data are invalid and should not be stored in the receive FIFO. The data transfer occurs as normal, according to the selected frame format (serial protocol). Transmit data are popped from the transmit FIFO and sent through the txd line to the target device, which replies with data on the rxd line. At the end of the data frame, the receive shift register does not load its newly received data into the receive FIFO. The data in the receive shift register is

overwritten by the next transfer. You should mask interrupts originating from the receive logic when this mode is entered.

4.10.8.3. Receive Only

When TMOD = 10b, the transmit data are invalid. When configured as a slave, the transmit FIFO is never popped in Receive Only mode. The txd output remains at a constant logic level during the transmission. The data transfer occurs as normal according to the selected frame format (serial protocol). The receive data from the target device is moved from the receive shift register into the receive FIFO at the end of each data frame. You should mask interrupts originating from the transmit logic when this mode is entered.

4.10.8.4. EEPROM Read

NOTE

This transfer mode is only valid for master configurations.

When TMOD = 11b, the transmit data is used to transmit an opcode and/or an address to the EEPROM device. Typically this takes three data frames (8-bit opcode followed by 8-bit upper address and 8-bit lower address). During the transmission of the opcode and address, no data is captured by the receive logic (as long as the DW_apb_ssi master is transmitting data on its txd line, data on the rxd line is ignored). The DW_apb_ssi master continues to transmit data until the transmit FIFO is empty. Therefore, you should ONLY have enough data frames in the transmit FIFO to supply the opcode and address to the EEPROM. If more data frames are in the transmit FIFO than are needed, then read data is lost.

When the transmit FIFO becomes empty (all control information has been sent), data on the receive line (rxd) is valid and is stored in the receive FIFO; the txd output is held at a constant logic level. The serial transfer continues until the number of data frames received by the DW_apb_ssi master matches the value of the NDF field in the CTRLR1 register + 1.

NOTE

EEPROM read mode is not supported when the DW_apb_ssi is configured to be in the SSP mode.

4.10.9. Operation Modes

The DW_apb_ssi can be configured in the fundamental modes of operation discussed in this section.

4.10.9.1. Serial Master Mode

This mode enables serial communication with serial-slave peripheral devices. When configured as a serial-master device, the DW_apb_ssi initiates and controls all serial transfers. Figure 120 shows an example of the DW_apb_ssi configured as a serial master with all other devices on the serial bus configured as serial slaves.

Figure 120. DW_apb_ssi Configured as Master Device

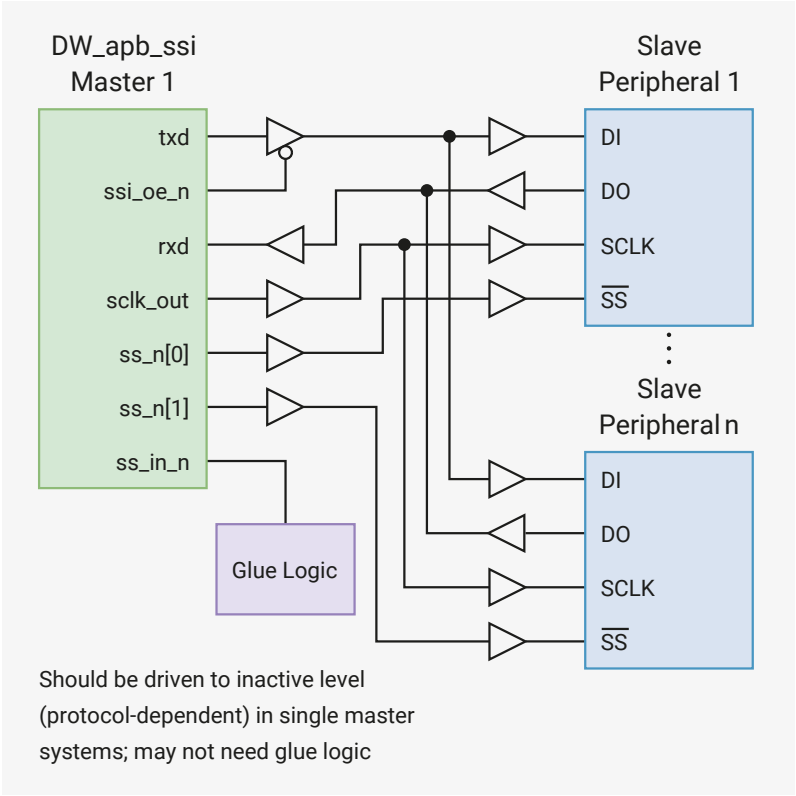

The serial bit-rate clock, generated and controlled by the DW_apb_ssi, is driven out on the sclk_out line. When the DW_apb_ssi is disabled (SSI_EN = 0), no serial transfers can occur and sclk_out is held in “inactive” state, as defined by the serial protocol under which it operates.

Multiple master configuration is not supported.

4.10.9.1.1. RXD Sample Delay

When the DW_apb_ssi is configured as a master, additional logic can be included in the design in order to delay the default sample time of the rxd signal. This additional logic can help to increase the maximum achievable frequency on the serial bus.

Round trip routing delays on the sclk_out signal from the master and the rxd signal from the slave can mean that the timing of the rxd signal—as seen by the master—has moved away from the normal sampling time. Figure 121 illustrates this situation.

Figure 121. Effects of Round-Trip Routing Delays on sclk_out Signal

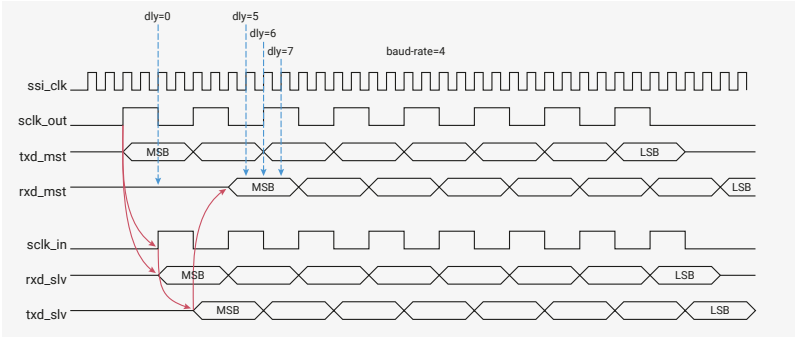

The Slave uses the sclk_out signal from the master as a strobe in order to drive rxd signal data onto the serial bus. Routing and sampling delays on the sclk_out signal by the slave device can mean that the rxd bit has not stabilized to the correct value before the master samples the rxd signal. Figure 121 shows an example of how a routing delay on the rxd signal can result in an incorrect rxd value at the default time when the master samples the port.

Without the RXD Sample Delay logic, the user would have to increase the baud-rate for the transfer in order to ensure that the setup times on the rxd signal are within range; this results in reducing the frequency of the serial interface.

When the RXD Sample Delay logic is included, the user can dynamically program a delay value in order to move the sampling time of the rxd signal equal to a number of ssi_clk cycles from the default.

The sample delay logic has a resolution of one ssi_clk cycle. Software can “train” the serial bus by coding a loop that continually reads from the slave and increments the master’s RXD Sample Delay value until the correct data is received by the master.

4.10.9.1.2. Data Transfers

Data transfers are started by the serial-master device. When the DW_apb_ssi is enabled (SSI_EN=1), at least one valid data entry is present in the transmit FIFO and a serial-slave device is selected. When actively transferring data, the busy flag (BUSY) in the status register (SR) is set. You must wait until the busy flag is cleared before attempting a new serial transfer.

NOTE

The BUSY status is not set when the data are written into the transmit FIFO. This bit gets set only when the target slave has been selected and the transfer is underway. After writing data into the transmit FIFO, the shift logic does not begin the serial transfer until a positive edge of the sclk_out signal is present. The delay in waiting for this positive edge depends on the baud rate of the serial transfer. Before polling the BUSY status, you should first poll the TFE status (waiting for 1) or wait for BAUDR * ssi_clk clock cycles.

4.10.9.1.3. Master SPI and SSP Serial Transfers

When the transfer mode is “transmit and receive” or “transmit only” (TMOD = `00b` or TMOD = `01b`, respectively), transfers are terminated by the shift control logic when the transmit FIFO is empty. For continuous data transfers, you must ensure that the transmit FIFO buffer does not become empty before all the data have been transmitted. The transmit FIFO threshold level (TXFTLR) can be used to early interrupt (ssi_txe_intr) the processor indicating that the transmit FIFO buffer is nearly empty. When a DMA is used for APB accesses, the transmit data level (DMATDLR) can be used to early request (dma_tx_req) the DMA Controller, indicating that the transmit FIFO is nearly empty. The FIFO can then be refilled with data to continue the serial transfer. The user may also write a block of data (at least two FIFO entries) into the transmit FIFO before enabling a serial slave. This ensures that serial transmission does not begin until the number of data-frames that make up the continuous transfer are present in the transmit FIFO.

When the transfer mode is “receive only” (TMOD = `10b`), a serial transfer is started by writing one “dummy” data word into the transmit FIFO when a serial slave is selected. The txd output from the DW_apb_ssi is held at a constant logic level for the duration of the serial transfer. The transmit FIFO is popped only once at the beginning and may remain empty for the duration of the serial transfer. The end of the serial transfer is controlled by the “number of data frames” (NDF) field in control register 1 (CTRLR1).

If, for example, you want to receive 24 data frames from a serial-slave peripheral, you should program the NDF field with the value 23; the receive logic terminates the serial transfer when the number of frames received is equal to the NDF value + 1. This transfer mode increases the bandwidth of the APB bus as the transmit FIFO never needs to be serviced during the transfer. The receive FIFO buffer should be read each time the receive FIFO generates a FIFO full interrupt request to prevent an overflow.

When the transfer mode is “eeprom_read” (TMOD = `11b`), a serial transfer is started by writing the opcode and/or address into the transmit FIFO when a serial slave (EEPROM) is selected. The opcode and address are transmitted to the EEPROM device, after which read data is received from the EEPROM device and stored in the receive FIFO. The end of the serial transfer is controlled by the NDF field in the control register 1 (CTRLR1).

NOTE

EEPROM read mode is not supported when the DW_apb_ssi is configured to be in the SSP mode.

The receive FIFO threshold level (RXFTLR) can be used to give early indication that the receive FIFO is nearly full. When a DMA is used for APB accesses, the receive data level (DMARDLR) can be used to early request (dma_rx_req) the DMA Controller, indicating that the receive FIFO is nearly full.

A typical software flow for completing an SPI or SSP serial transfer from the DW_apb_ssi serial master is outlined as follows:

1. If the DW_apb_ssi is enabled, disable it by writing 0 to the SSI Enable register (SSIENR).
2. Set up the DW_apb_ssi control registers for the transfer; these registers can be set in any order.
    - Write Control Register 0 (CTRLR0). For SPI transfers, the serial clock polarity and serial clock phase parameters must be set identical to target slave device.
    - If the transfer mode is receive only, write CTRLR1 (Control Register 1) with the number of frames in the transfer minus 1; for example, if you want to receive four data frames, if you want to receive four data frames, write '3' into CTRLR1.
    - Write the Baud Rate Select Register (BAUDR) to set the baud rate for the transfer.
    - Write the Transmit and Receive FIFO Threshold Level registers (TXFTLR and RXFTLR, respectively) to set FIFO threshold levels.
    - Write the IMR register to set up interrupt masks.
    - The Slave Enable Register (SER) register can be written here to enable the target slave for selection. If a slave is enabled here, the transfer begins as soon as one valid data entry is present in the transmit FIFO. If no slaves are enabled prior to writing to the Data Register (DR), the transfer does not begin until a slave is enabled.
3. Enable the DW_apb_ssi by writing 1 to the SSIENR register.
4. Write data for transmission to the target slave into the transmit FIFO (write DR). If no slaves were enabled in the SER register at this point, enable it now to begin the transfer.
5. Poll the BUSY status to wait for completion of the transfer. The BUSY status cannot be polled immediately.
6. If a transmit FIFO empty interrupt request is made, write the transmit FIFO (write DR). If a receive FIFO full interrupt request is made, read the receive FIFO (read DR).
7. The transfer is stopped by the shift control logic when the transmit FIFO is empty. If the transfer mode is receive only (TMOD = `10b`), the transfer is stopped by the shift control logic when the specified number of frames have been received. When the transfer is done, the BUSY status is reset to 0.
8. If the transfer mode is not transmit only (TMOD != `01b`), read the receive FIFO until it is empty.
9. Disable the DW_apb_ssi by writing 0 to SSIENR.

Figure 122 shows a typical software flow for starting a DW_apb_ssi master SPI/SSP serial transfer. The diagram also shows the hardware flow inside the serial-master component.

Figure 122. DW_apb_ssi Master SPI/SSP Transfer Flow

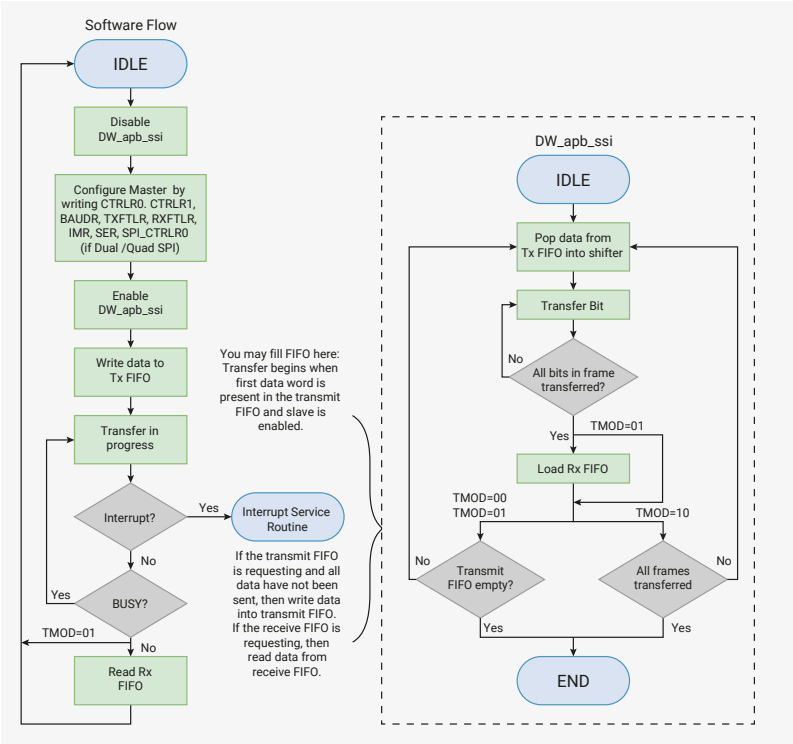

4.10.9.1.4. Master Microwire Serial Transfers

Microwire serial transfers from the DW_apb_ssi serial master are controlled by the Microwire Control Register (MWCR). The MWHS bit field enables and disables the Microwire handshaking interface. The MDD bit field controls the direction of the data frame (the control frame is always transmitted by the master and received by the slave). The MWMOD bit field defines whether the transfer is sequential or nonsequential.

All Microwire transfers are started by the DW_apb_ssi serial master when there is at least one control word in the transmit FIFO and a slave is enabled. When the DW_apb_ssi master transmits the data frame (MDD = 1), the transfer is terminated by the shift logic when the transmit FIFO is empty. When the DW_apb_ssi master receives the data frame (MDD = 1), the termination of the transfer depends on the setting of the MWMOD bit field. If the transfer is nonsequential (MWMOD = 0), it is terminated when the transmit FIFO is empty after shifting in the data frame from the slave. When the transfer is sequential (MWMOD = 1), it is terminated by the shift logic when the number of data frames received is equal to the value in the CTRLR1 register + 1.

When the handshaking interface on the DW_apb_ssi master is enabled (MWHS =1), the status of the target slave is polled after transmission. Only when the slave reports a ready status does the DW_apb_ssi master complete the transfer and clear its BUSY status. If the transfer is continuous, the next control/data frame is not sent until the slave device returns a ready status.

A typical software flow for completing a Microwire serial transfer from the DW_apb_ssi serial master is outlined as follows:

1. If the DW_apb_ssi is enabled, disable it by writing 0 to SSIENR.
2. Set up the DW_apb_ssi control registers for the transfer. These registers can be set in any order. Write CTRLR0 to set transfer parameters.
    - If the transfer is sequential and the DW_apb_ssi master receives data, write CTRLR1 with the number of frames in the transfer minus 1; for instance, if you want to receive four data frames, write '3' into CTRLR1.
    - Write BAUDR to set the baud rate for the transfer.
    - Write TXFTLR and RXFTLR to set FIFO threshold levels.
    - Write the IMR register to set up interrupt masks.

You can write the SER register to enable the target slave for selection. If a slave is enabled here, the transfer begins as soon as one valid data entry is present in the transmit FIFO. If no slaves are enabled prior to writing to the DR register, the transfer does not begin until a slave is enabled.

3. Enable the DW_apb_ssi by writing 1 to the SSIENR register.
4. If the DW_apb_ssi master transmits data, write the control and data words into the transmit FIFO (write DR). If the DW_apb_ssi master receives data, write the control word(s) into the transmit FIFO.

   If no slaves were enabled in the SER register at this point, enable now to begin the transfer.
5. Poll the BUSY status to wait for completion of the transfer. The BUSY status cannot be polled immediately.
6. The transfer is stopped by the shift control logic when the transmit FIFO is empty. If the transfer mode is sequential and the DW_apb_ssi master receives data, the transfer is stopped by the shift control logic when the specified number of data frames is received. When the transfer is done, the BUSY status is reset to 0.
7. If the DW_apb_ssi master receives data, read the receive FIFO until it is empty.
8. Disable the DW_apb_ssi by writing 0 to SSIENR.

Figure 123 shows a typical software flow for starting a DW_apb_ssi master Microwire serial transfer. The diagram also shows the hardware flow inside the serial-master component.

Figure 123. DW_apb_ssi Master Microwire Transfer Flow

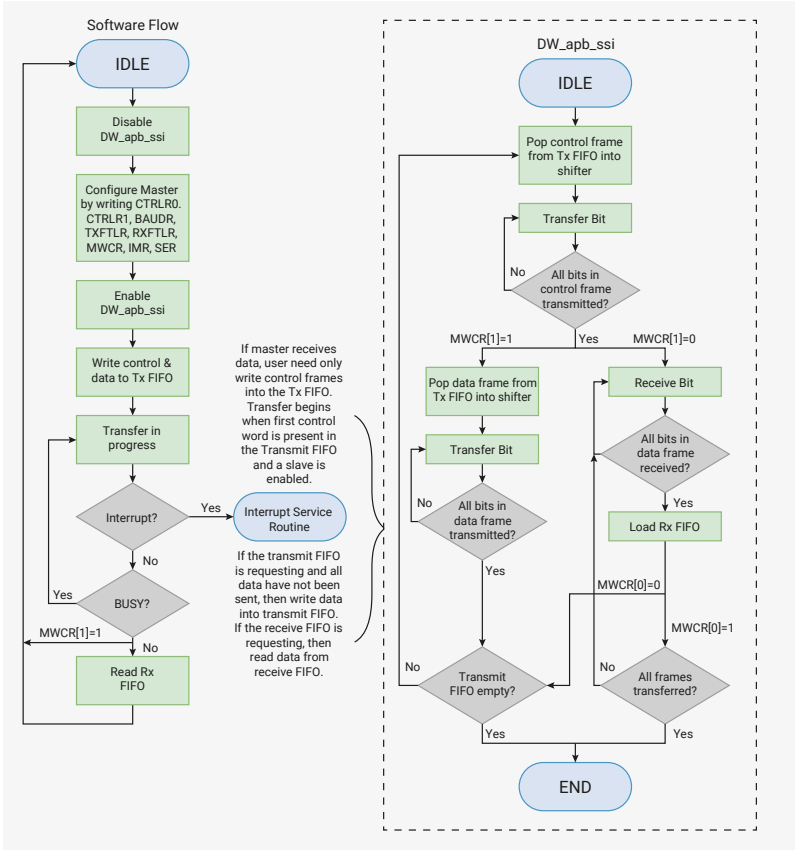

4.10.10. Partner Connection Interfaces

The DW_apb_ssi can connect to any serial-slave peripheral device using one of the interfaces discussed in the following sections.

4.10.10.1. Motorola Serial Peripheral Interface (SPI)

With the SPI, the clock polarity (SCPOL) configuration parameter determines whether the inactive state of the serial clock is high or low. To transmit data, both SPI peripherals must have identical serial clock phase (SCPH) and clock polarity (SCPOL) values. The data frame can be 4 to 16/32 bits (depending upon SSI_MAX_XFER_SIZE) in length.

When the configuration parameter SCPH = 0, data transmission begins on the falling edge of the slave select signal. The first data bit is captured by the master and slave peripherals on the first edge of the serial clock; therefore, valid data must be present on the txd and rxd lines prior to the first serial clock edge.

Figure 124 shows a timing diagram for a single SPI data transfer with SCPH = 0. The serial clock is shown for configuration parameters SCPOL = 0 and SCPOL = 1.

Figure 124. SPI Serial Format (SCPH = 0)

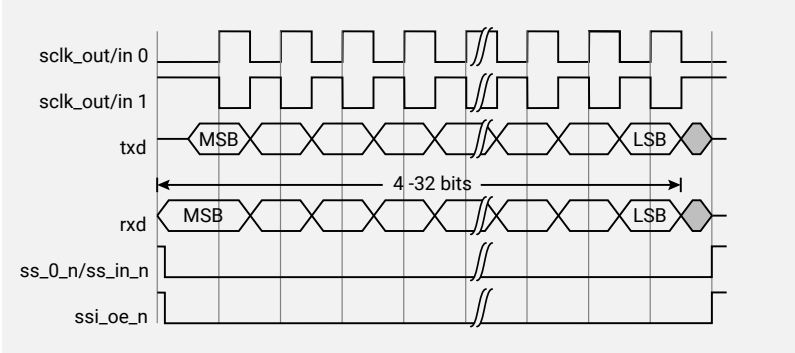

The following signals are illustrated in the timing diagrams in this section:

sclk_out

serial clock from DW_apb_ssi master

ss_0_n

slave select signal from DW_apb_ssi master

ss_in_n

slave select input to the DW_apb_ssi slave

ss_oe_n

output enable for the DW_apb_ssi master

txd

transmit data line for the DW_apb_ssi master

rxd

receive data line for the DW_apb_ssi master

Continuous data transfers are supported when SCPH = 0:

- When CTRLR0. SSTE is set to 1, the DW_apb_ssi toggles the slave select signal between frames and the serial clock is held to its default value while the slave select signal is active; this operating mode is illustrated in Figure 125.

Figure 125. Serial Format Continuous Transfers (SCPH = 0)

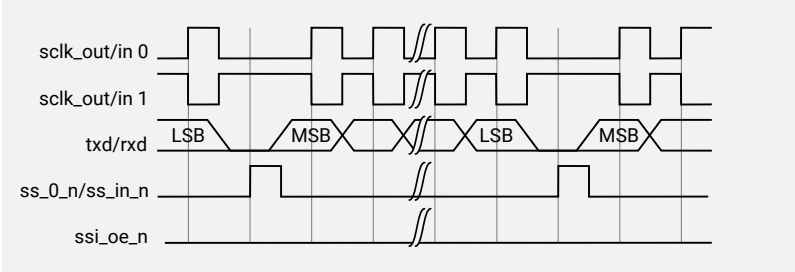

When the configuration parameter SCPH = 1, master peripherals begin transmitting data on the first serial clock edge

after the slave select line is activated. The first data bit is captured on the second (trailing) serial clock edge. Data are propagated by the master peripherals on the leading edge of the serial clock. During continuous data frame transfers, the slave select line may be held active-low until the last bit of the last frame has been captured.

Figure 126 shows the timing diagram for the SPI format when the configuration parameter SCPH = 1.

Figure 126. SPI Serial Format (SCPH = 1)

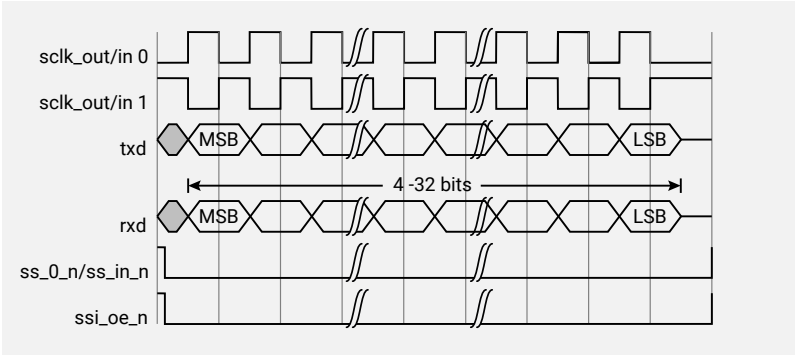

Continuous data frames are transferred in the same way as single frames, with the MSB of the next frame following directly after the LSB of the current frame. The slave select signal is held active for the duration of the transfer.

Figure 127 shows the timing diagram for continuous SPI transfers when the configuration parameter SCPH = 1.

Figure 127. SPI Serial Format Continuous Transfer (SCPH = 1)

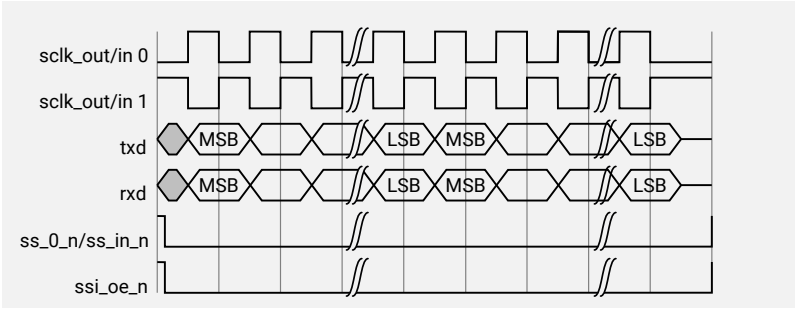

There are four possible transfer modes on the DW_apb_ssi for performing SPI serial transactions. For transmit and receive transfers (transfer mode field (9:8) of the Control Register 0 = `00b`), data transmitted from the DW_apb_ssi to the external serial device is written into the transmit FIFO. Data received from the external serial device into the DW_apb_ssi is pushed into the receive FIFO.

Figure 128 shows the FIFO levels prior to the beginning of a serial transfer and the FIFO levels on completion of the transfer. In this example, two data words are transmitted from the DW_apb_ssi to the external serial device in a continuous transfer. The external serial device also responds with two data words for the DW_apb_ssi.

Figure 128. FIFO Status for Transmit & Receive SPI and SSP Transfers

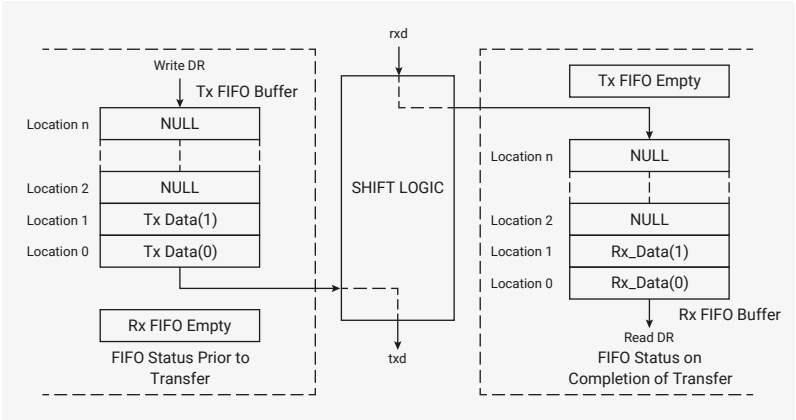

For transmit only transfers (transfer mode field (9:8) of the Control Register 0 = `01b`), data transmitted from the DW_apb_ssi to the external serial device is written into the transmit FIFO. As the data received from the external serial device is deemed invalid, it is not stored in the DW_apb_ssi receive FIFO.

Figure 129 shows the FIFO levels prior to the beginning of a serial transfer and the FIFO levels on completion of the transfer. In this example, two data words are transmitted from the DW_apb_ssi to the external serial device in a continuous transfer.

Figure 129. FIFO Status for Transmit Only SPI and SSP Transfers

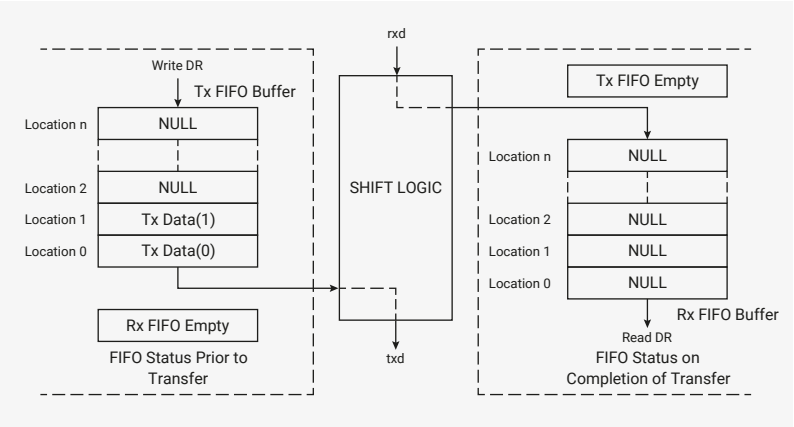

For receive only transfers (transfer mode field (9:8) of the Control Register 0 = 10b), data transmitted from the DW_apb_ssi to the external serial device is invalid, so a single dummy word is written into the transmit FIFO to begin the serial transfer. The txd output from the DW_apb_ssi is held at a constant logic level for the duration of the serial transfer. Data received from the external serial device into the DW_apb_ssi is pushed into the receive FIFO.

Figure 130 shows the FIFO levels prior to the beginning of a serial transfer and the FIFO levels on completion of the transfer. In this example, two data words are received by the DW_apb_ssi from the external serial device in a continuous transfer.

Figure 130. FIFO Status for Receive Only SPI and SSP Transfers

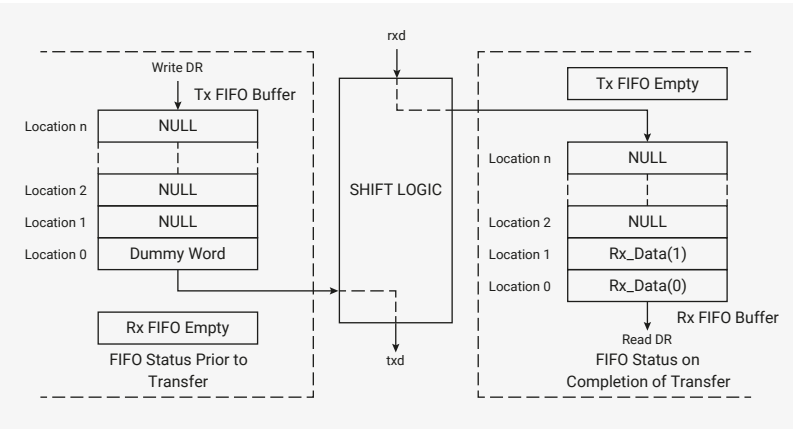

For eeprom_read transfers (transfer mode field [9:8] of the Control Register 0 = 11b), opcode and/or EEPROM address are written into the transmit FIFO. During transmission of these control frames, received data is not captured by the DW_apb_ssi master. After the control frames have been transmitted, receive data from the EEPROM is stored in the receive FIFO.

Figure 131 shows the FIFO levels prior to the beginning of a serial transfer and the FIFO levels on completion of the transfer. In this example, one opcode and an upper and lower address are transmitted to the EEPROM, and eight data frames are read from the EEPROM and stored in the receive FIFO of the DW_apb_ssi master.

Figure 131. FIFO Status for EEPROM Read Transfer Mode

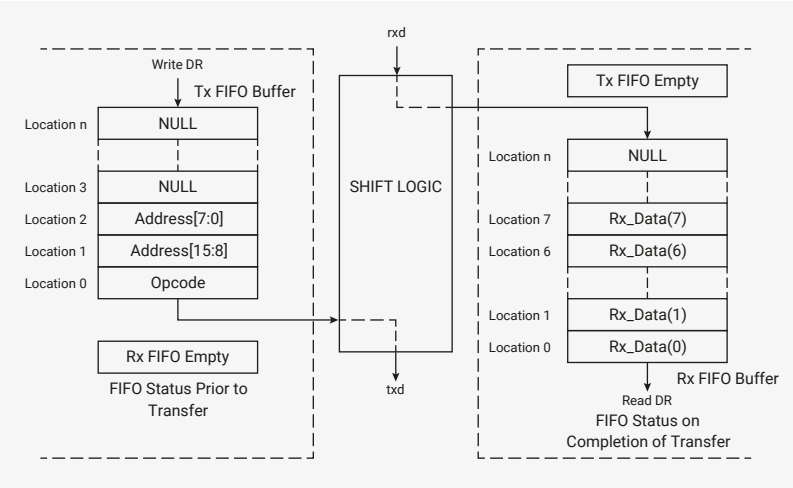

4.10.10.2. Texas Instruments Synchronous Serial Protocol (SSP)

Data transfers begin by asserting the frame indicator line (ss_0_n/ss_in_n) for one serial clock period. Data to be transmitted are driven onto the txd line one serial clock cycle later; similarly data from the slave are driven onto the rxd line. Data are propagated on the rising edge of the serial clock (sclk_out/sclk_in) and captured on the falling edge. The length of the data frame ranges from four to 32 bits.

Figure 132 shows the timing diagram for a single SSP serial transfer.

Figure 132. SSP Serial Format

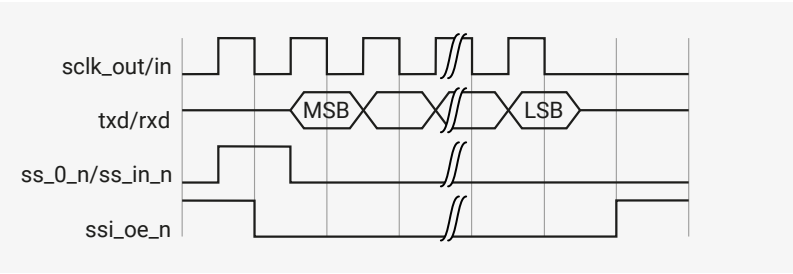

Continuous data frames are transferred in the same way as single data frames. The frame indicator is asserted for one clock period during the same cycle as the LSB from the current transfer, indicating that another data frame follows.

Figure 133 shows the timing for a continuous SSP transfer.

Figure 133. SSP Serial Format Continuous Transfer

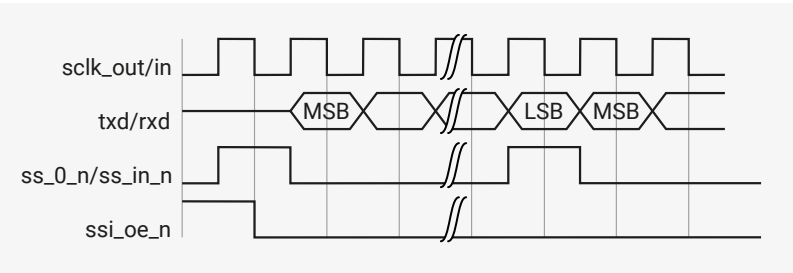

4.10.10.3. National Semiconductor Microwire

Data transmission begins with the falling edge of the slave-select signal (ss_0_n). One-half serial clock (sclk_out) period later, the first bit of the control is sent out on the txd line. The length of the control word can be in the range 1 to 16 bits and is set by writing bit field CFS (bits 15:12) in CTRLR0. The remainder of the control word is transmitted (propagated on the falling edge of sclk_out) by the DW_apb_ssi serial master. During this transmission, no data are present (high impedance) on the serial master's rxd line.

The direction of the data word is controlled by the MDD bit field (bit 1) in the Microwire Control Register (MWCR). When MDD=0, this indicates that the DW_apb_ssi serial master receives data from the external serial slave. One clock cycle after the LSB of the control word is transmitted, the slave peripheral responds with a dummy 0 bit, followed by the data frame, which can be four to 32 bits in length. Data are propagated on the falling edge of the serial clock and captured on the rising edge.

The slave-select signal is held active-low during the transfer and is de-asserted one-half clock cycle later, after the data are transferred. Figure 134 shows the timing diagram for a single DW_apb_ssi serial master read from an external serial slave.

Figure 134. Single DW_apb_ssi Master Microwire Serial Transfer (MDD=0)

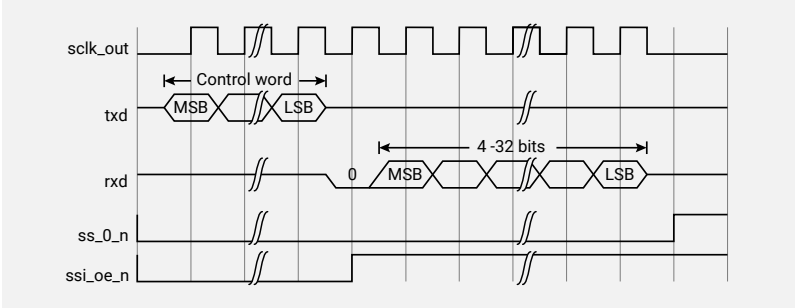

Figure 135 shows how the data and control frames are structured in the transmit FIFO prior to the transfer; the value programmed into the MWCR register is also shown.

Figure 135. FIFO Status for Single Microwire Transfer (receiving data frame)

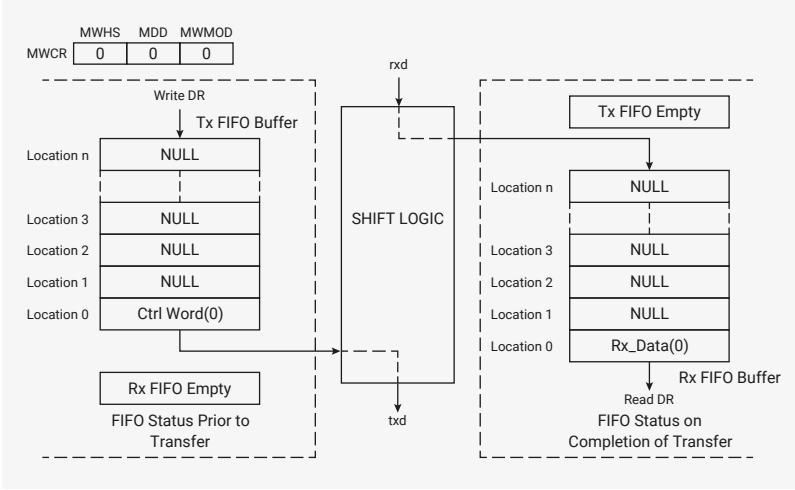

Continuous transfers for the Microwire protocol can be sequential or nonsequential, and are controlled by the MWMOD bit field (bit 0) in the MWCR register.

Nonsequential continuous transfers occur as illustrated in Figure 136, with the control word for the next transfer following immediately after the LSB of the current data word.

Figure 136. Continuous Nonsequential Microwire Transfer (receiving data frame)

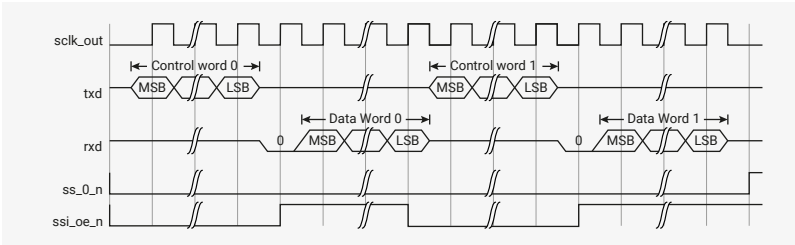

The only modification needed to perform a continuous nonsequential transfer is to write more control words into the transmit FIFO buffer; this is illustrated in Figure 137. In this example, two data words are read from the external serial-slave device.

Figure 137. FIFO Status for Nonsequential Microwire Transfer (receiving data frame)

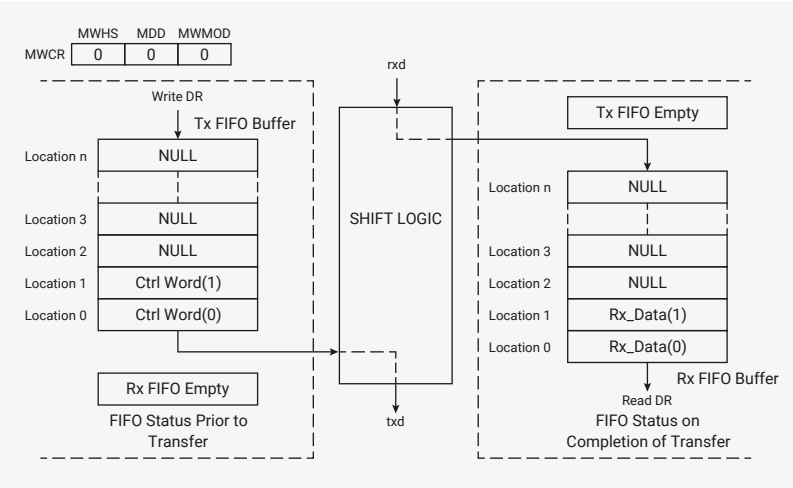

During sequential continuous transfers, only one control word is transmitted from the DW_apb_ssi master. The transfer is started in the same manner as with nonsequential read operations, but the cycle is continued to read further data. The slave device automatically increments its address pointer to the next location and continues to provide data from that location. Any number of locations can be read in this manner; the DW_apb_ssi master terminates the transfer when the number of words received is equal to the value in the CTRLR1 register plus one.

The timing diagram in Figure 138 and example in Figure 139 show a continuous sequential read of two data frames from the external slave device.

Figure 138. Continuous Sequential Microwire Transfer (receiving data frame)

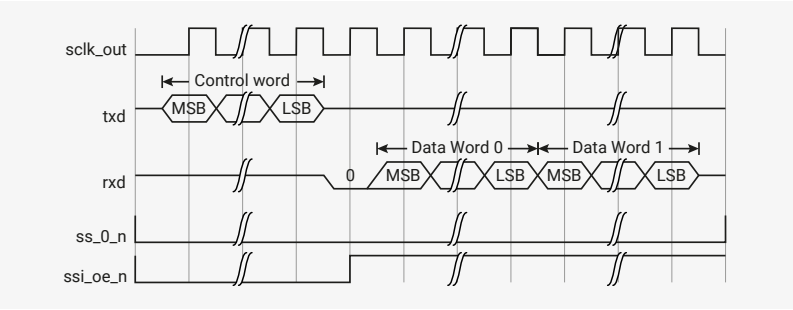

Figure 139. FIFO Status for Sequential Microwire Transfer (receiving data frame)

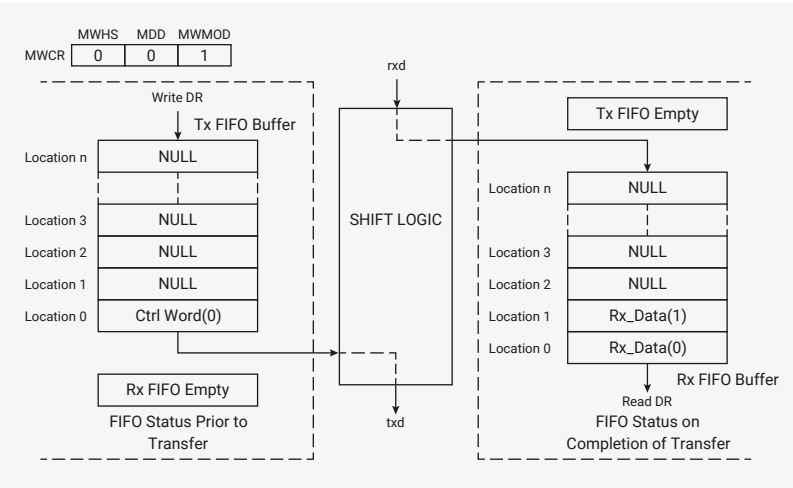

When MDD = 1, this indicates that the DW_apb_ssi serial master transmits data to the external serial slave. Immediately after the LSB of the control word is transmitted, the DW_apb_ssi master begins transmitting the data frame to the slave peripheral.

Figure 140 shows the timing diagram for a single DW_apb_ssi serial master write to an external serial slave.

Figure 140. Single Microwire Transfer (transmitting data frame)

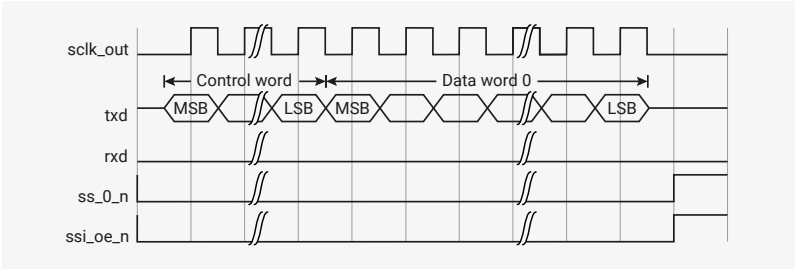

NOTE

The DW_apb_ssi does not support continuous sequential Microwire writes, where MDD = 1 and MWMOD = 1.

Figure 141 shows how the data and control frames are structured in the transmit FIFO prior to the transfer, also shown is the value programmed into the MWCR register.

Figure 141. FIFO Status for Single Microwire Transfer (transmitting data frame)

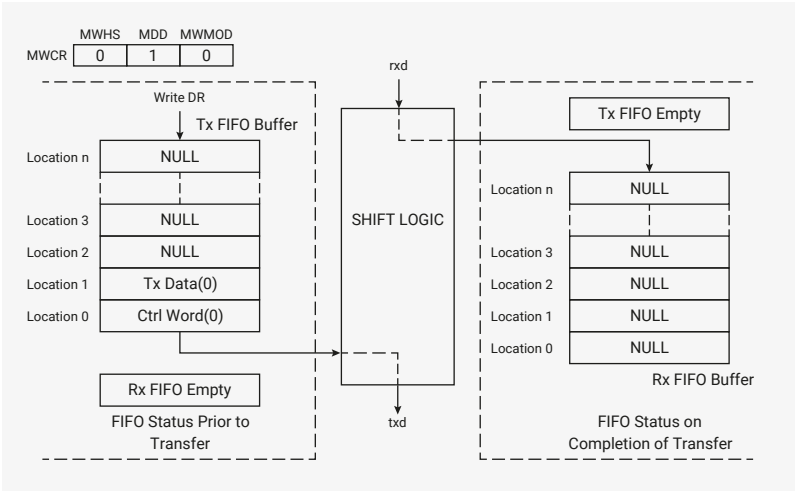

Continuous transfers occur as shown in Figure 142, with the control word for the next transfer following immediately after the LSB of the current data word.

Figure 142. Continuous Microwire Transfer (transmitting data frame)

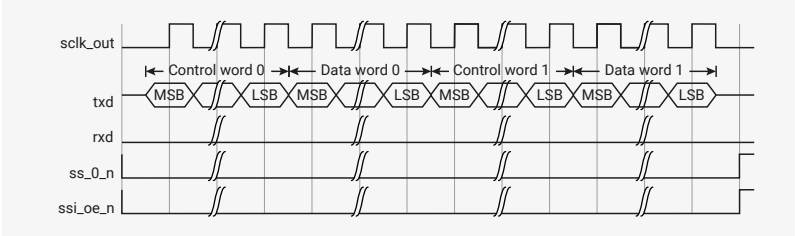

The only modification you need to make to perform a continuous transfer is to write more control and data words into the transmit FIFO buffer, shown in Figure 143. This example shows two data words are written to the external serial slave device.

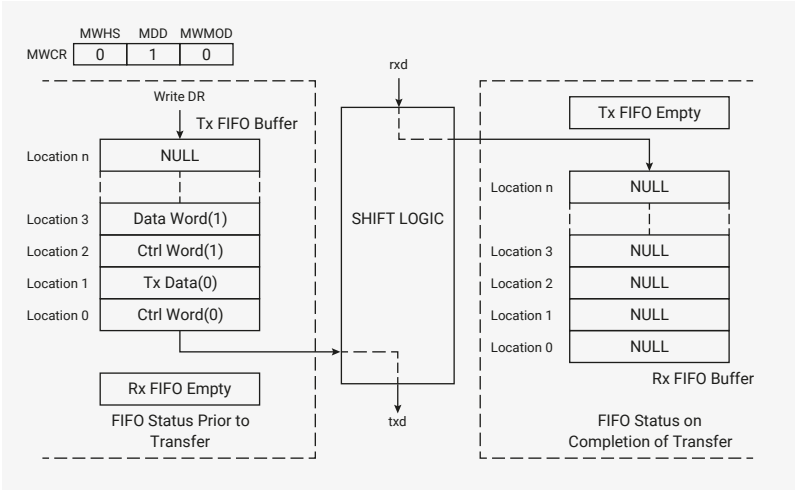

Figure 143. FIFO Status for Continuous Microwire Transfer (transmitting data frame)

The Microwire handshaking interface can also be enabled for DW_apb_ssi master write operations to external serial-slave devices. To enable the handshaking interface, you must write 1 into the MHS bit field (bit 2) on the MWCR register. When MHS is set to 1, the DW_apb_ssi serial master checks for a ready status from the slave device before completing the transfer, or transmitting the next control word for continuous transfers.

Figure 144 shows an example of a continuous Microwire transfer with the handshaking interface enabled.

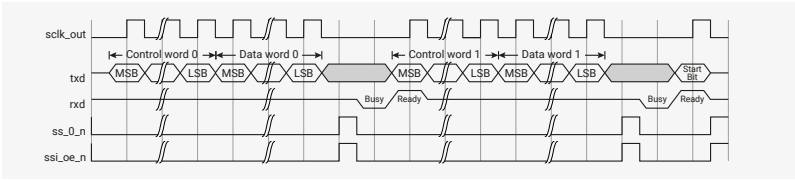

Figure 144. Continuous Microwire Transfer with Handshaking (transmitting data frame)

After the first data word has been transmitted to the serial-slave device, the DW_apb_ssi master polls the rxd input waiting for a ready status from the slave device. Upon reception of the ready status, the DW_apb_ssi master begins transmission of the next control word. After transmission of the last data frame has completed, the DW_apb_ssi master transmits a start bit to clear the ready status of the slave device before completing the transfer. The FIFO status for this transfer is the same as in Figure 143, except that the MWHS bit field is set (1).

To transmit a control word (not followed by data) to a serial-slave device from the DW_apb_ssi master, there must be only one entry in the transmit FIFO buffer. It is impossible to transmit two control words in a continuous transfer, as the shift logic in the DW_apb_ssi treats the second control word as a data word. When the DW_apb_ssi master transmits only a control word, the MDD bit field (bit 1 of MWCR register) must be set (1).

In the example shown in Figure 145 and in the timing diagram in Figure 146, the handshaking interface is enabled. If the handshaking interface is disabled (MHS=0), the transfer is terminated by the DW_apb_ssi master one sclk_out cycle after the LSB of the control word is captured by the slave device.

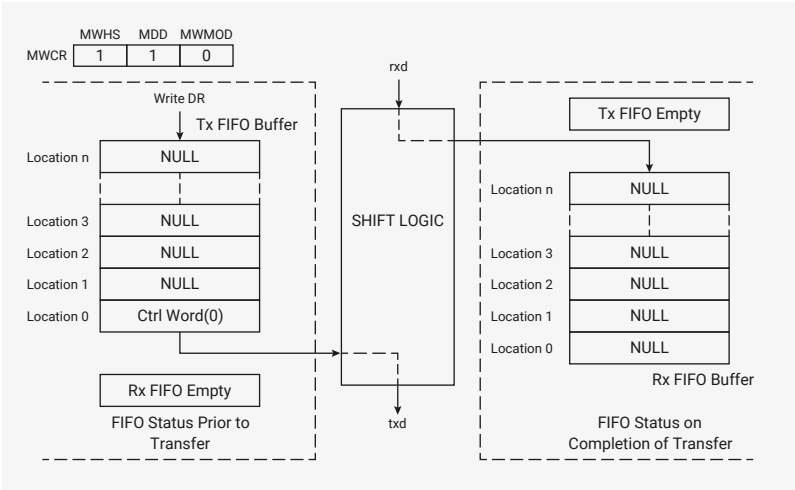

Figure 145. FIFO Status for Microwire Control Word Transfer

Figure 146. Microwire Control Word

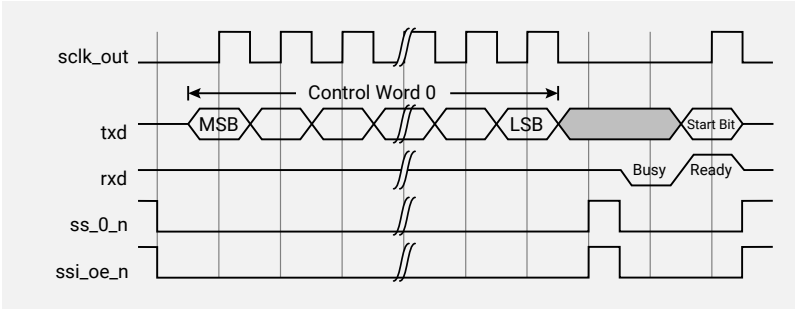

4.10.10.4. Enhanced SPI Modes

DW_apb_ssi supports the dual and quad modes of SPI in RP2040; octal mode is not supported. txd, rxd and ssi_oe_n signals are four bits wide.

Data is shifted out/in on more than one line, increasing the overall throughput. All four combinations of the serial clock's polarity and phase are valid in this mode and work the same as in normal SPI mode. Dual SPI, or Quad SPI modes function similarly except for the width of txd, rxd and ssi_oe_n signals. The mode of operation (write/read) can be selected using the CTRLR0.TMOD field.

4.10.10.4.1. Write Operation in Enhanced SPI Modes

Dual, or Quad, SPI write operations can be divided into three parts:

- Instruction phase
- Address phase
- Data phase

The following register fields are used for a write operation:

- CTRLR0.SPI_FRF - Specifies the format in which the transmission happens for the frame.
- SPI_CTRLR0 (Control Register 0 register) – Specifies length of instruction, address, and data.
- SPI_CTRLR0.INST_L – Specifies length of an instruction (possible values for an instruction are 0, 4, 8, or 16 bits.)
- SPI_CTRLR0.ADDR_L – Specifies address length (See Table 579 for decode values)
- CTRLR0.DFS or CTRLR0.DFS_32 – Specifies data length.

An instruction takes one FIFO location. An address can take more than one FIFO locations.

Both the instruction and address must be programmed in the data register (DR). DW_apb_ssi will wait until both have been programmed to start the write operation.

The instruction, address and data can be programmed to send in dual/quad mode, which can be selected from the SPI_CTRLR0.TRANS_TYPE and CTRLR0.SPI_FRF fields.

NOTE

- If CTRLR0.SPI_FRF is selected to be "Standard SPI Format", everything is sent in Standard SPI mode and SPI_CTRLR0.TRANS_TYPE field is ignored.
- CTRLR0.SPI_FRF is only applicable if CTRLR0.FRF is programmed to 00b.

Figure 147 shows a typical write operation in Dual, or Quad, SPI Mode. The value of N will be: 7 if SSI_SPI_MODE is set to 3, 3 if SSI_SPI_MODE is set to 2, and 1 if SSI_SPI_MODE is set to 1. For 1-write operation, the instruction and address are sent only once followed by data frames programmed in DR until the transmit FIFO becomes empty.

Figure 147. Typical Write Operation Dual/Quad SPI Mode

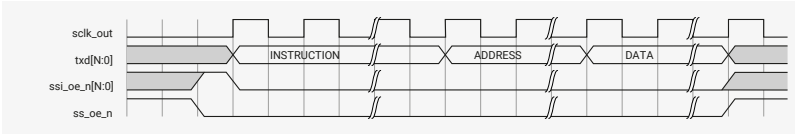

To initiate a Dual/Quad write operation, CTRLR0.SPI_FRF must be set to 01/10/11, respectively. This will set the transfer type, and for each write command, data will be transferred in the format specified in CTLR0.SPI_FRF field.

Case A: Instruction and address both transmitted in standard SPI format

For this, SPI_CTRLR0.TRANS_TYPE field must be set to 00b. Figure 148 show the timing diagram when both instruction and address are transmitted in standard SPI format. The value of N will be: 7 if CTRLR0.SPI_FRF is set to 11b, 3 if CTRLR0.SPI_FRF is set to 10b, and 1 if CTRLR0.SPI_FRF is set to 01b.

Figure 148. Instruction and Address Transmitted in Standard SPI Format

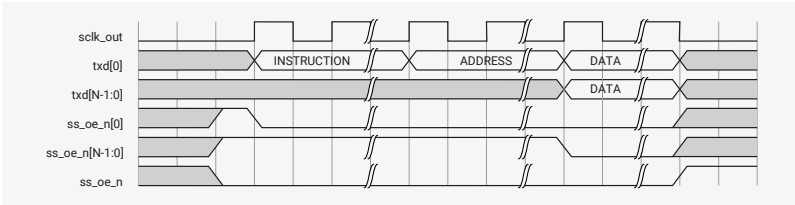

Case B: Instruction transmitted in standard and address transmitted in Enhanced SPI format

For this, SPI_CTRLR0.TRANS_TYPE field must be set to one. Figure 149 shows the timing diagram when an instruction is transmitted in standard format and address is transmitted in dual SPI format specified in the CTRLR0.SPI_FRF field. The value of N will be: 7 if CTRLR0.SPI_FRF is set to 11b, 3 if CTRLR0.SPI_FRF is set to 10b, and 1 if CTRLR0.SPI_FRF is set to 01b.

Figure 149. Instruction Transmitted in Standard and Address Transmitted in Enhanced SPI Format

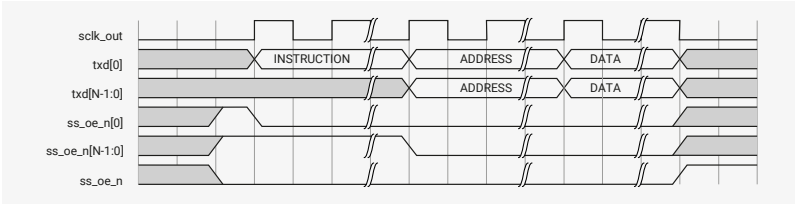

Case C: Instruction and Address both transmitted in Enhanced SPI format

For this, SPI_CTRLR0.TRANS_TYPE field must be set to 10b. Figure 150 shows the timing diagram in which instruction and address are transmitted in SPI format specified in the CTRLR0.SPI_FRF field. The value of N will be: 7 if CTRLR0.SPI_FRF is set to 11b, 3 if CTRLR0.SPI_FRF is set to 10b, and 1 if CTRLR0.SPI_FRF is set to 01b.

Figure 150. Instruction and Address Both Transmitted in Enhanced SPI Format

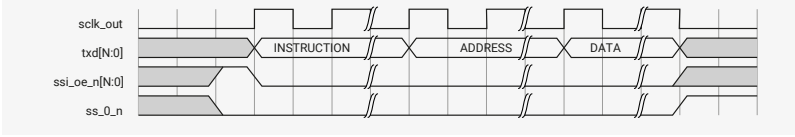

Case D: Instruction only transfer in enhanced SPI format

For this, SPI_CTRLR0.TRANS_TYPE field must be set to 10b. Figure 151 shows the timing diagram for such a transfer. The value of N will be: 7 if CTRLR0.SPI_FRF is set to 11b, 3 if CTRLR0.SPI_FRF is set to 10b, and 1 if

CTRLR0.SPI_FRF is set to 01b.

Figure 151. Instruction only transfer in enhanced SPI Format

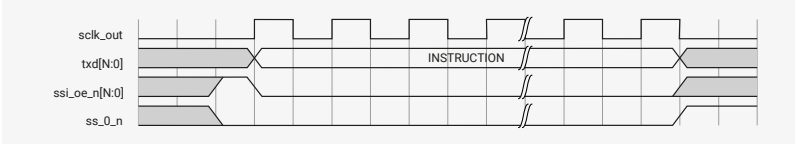

4.10.10.4.2. Read Operation in Enhanced SPI Modes

A Dual, or Quad, SPI read operation can be divided into four phases:

- Instruction phase
- Address phase
- Wait cycles
- Data phase

Wait Cycles can be programmed using SPI_CTRLR0.WAIT_CYCLES field. The value programmed into SPI_CTRLR0.WAIT_CYCLES is mapped directly to sclk_out times. For example, WAIT_CYCLES=0 indicates no Wait, WAIT_CYCLES=1, indicates one wait cycle and so on. The wait cycles are introduced for target slave to change their mode from input to output and the wait cycles can vary for different devices.

For a READ operation, DW_apb_ssi sends instruction and control data once and waits until it receives NDF (CTRLR1 register) number of data frames and then de-asserts slave select signal.

Figure 152 shows a typical read operation in dual quad SPI mode. The value of N will be: 3 if SSI_SPI_MODE is set to Quad mode, and 1 if SSI_SPI_MODE is set to Dual mode.

Figure 152. Typical Read Operation in Enhanced SPI Mode

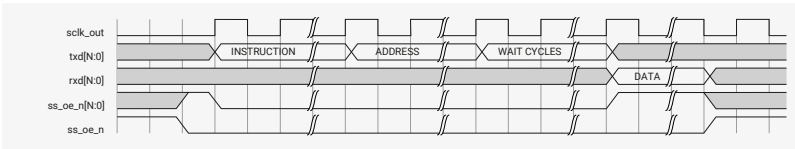

To initiate a dual/quad read operation, CTRLR0.SPI_FRF must be set to 01/10/11 respectively. This will set the transfer type, now for each read command data will be transferred in the format specified in CTLR0.SPI_FRF field.

Following are the possible cases of write operation in enhanced SPI modes:

Case A: Instruction and address both transmitted in standard SPI format

For this, SPI_CTRLR0.TRANS_TYPE field should be set to 00b. Figure 153 shows the timing diagram when both instruction and address are transferred in standard SPI format. The figure also shows WAIT cycles after address, which can be programmed in the SPI_CTRLR0.WAIT_CYCLES field. The value of N will be 7 if CTRLR0.SPI_FRF is set to 11b, 3 if CTRLR0.SPI_FRF is set to 10b, and 1 if CTRLR0.SPI_FRF is set to 01b.

Figure 153. Instruction and Address Transmitted in Standard SPI Format

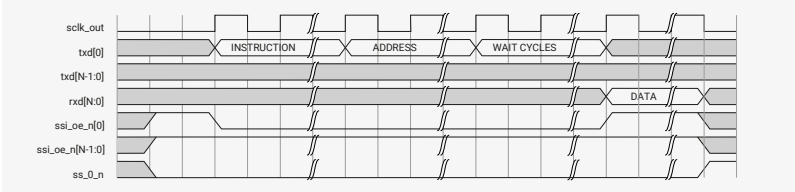

Case B: Instruction transmitted in standard and address transmitted in dual SPI format

For this, SPI_CTRLR0.TRANS_TYPE field should be set to 01b. Figure 154 shows the timing diagram in which instruction is transmitted in standard format and address is transmitted in dual SPI format. The value of N will be 7 if CTRLR0.SPI_FRF is set to 11b, 3 if CTRLR0.SPI_FRF is set to 10b, and 1 if CTRLR0.SPI_FRF is set to 01b.

Figure 154. Instruction Transmitted in Standard and Address Transmitted in Enhanced SPI Format

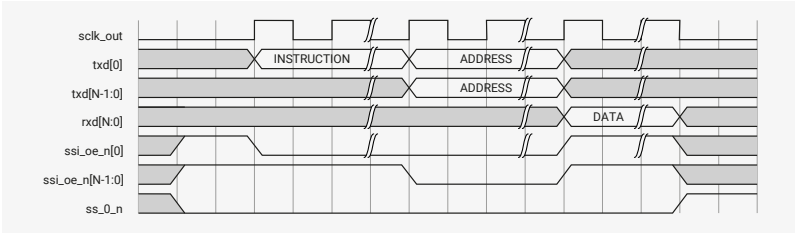

Case C: Instruction and Address both transmitted in Dual SPI format

For this, SPI_CTRLR0.TRANS_TYPE field must be set to 10b. Figure 155 shows the timing diagram in which both instruction and address are transmitted in dual SPI format. The value of N will be: 7 if CTRLR0.SPI_FRF is set to 11b, 3 if CTRLR0.SPI_FRF is set to 10b, and 1 if CTRLR0.SPI_FRF is set to 01b.

Figure 155. Instruction and Address Transmitted in Enhanced SPI Format

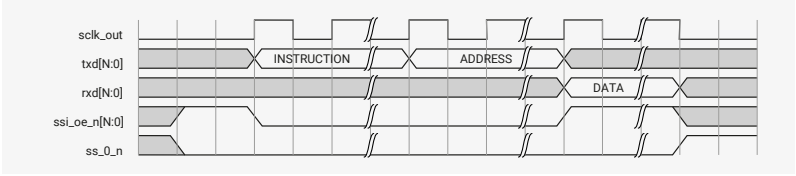

Case D: No Instruction, No Address READ transfer

For this, SPI_CTRLR0.ADDR_L and SPI_CTRLR0.INST_L must be set to 0 and SPI_CTRLR0.WAIT_CYCLES must be set to a non-zero value. Table 579 lists the ADDR_L decode value and the respective description for enhanced (Dual/Quad) SPI modes.

Table 579. ADDR_L Decode in Enhanced SPI Mode

ADDR_L Decode Value	Description
0000	0-bit Address Width
0001	4-bit Address Width
0010	8-bit Address Width
0011	12-bit Address Width
0100	16-bit Address Width
0101	20-bit Address Width
0110	24-bit Address Width
0111	28-bit Address Width
1000	32-bit Address Width
1001	36-bit Address Width
1010	40-bit Address Width
1011	44-bit Address Width
1100	48-bit Address Width
1101	52-bit Address Width
1110	56-bit Address Width
1111	60-bit Address Width

Figure 156 shows the timing diagram for such type of transfer. The value of N will be: 7 if CTRLR0.SPI_FRF is set to 11b, 3 if CTRLR0.SPI_FRF is set to 10b, and 1 if CTRLR0.SPI_FRF is set to 01b. To initiate this transfer, the software has to perform a dummy write in the data register (DR), DW_apb_ssi will wait for programmed wait cycles and then fetch the amount of data specified in NDF field.

Figure 156. No Instruction and No Address READ Transfer

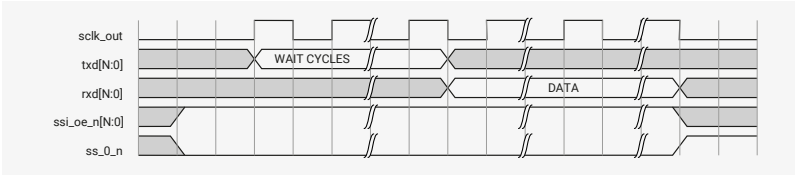

4.10.10.4.3. Advanced I/O Mapping for Enhanced SPI Modes

The Input/Output mapping for enhanced SPI modes (dual, and quad) is hardcoded inside the DW_apb_ssi. The rxd[1] signal will be used to sample incoming data in standard SPI mode of operation.

For other protocols (such as SSP and Microwire), the I/O mapping remains the same. Therefore, it is easy for other protocols to connect with any device that supports Dual/Quad SPI operation because other protocols do not require a MUX logic to exist outside the design.

Figure 157 shows the I/O mapping of DW_apb_ssi in Quad mode with another SPI device that supports the Quad mode. As illustrated in Figure 157, the IO[1] pin is used as DO in standard SPI mode of operation and it is connected to rxd[1] pin, which will be sampling the input in the standard mode of operation.

Figure 157. Advanced I/O Mapping in Quad SPI Modes

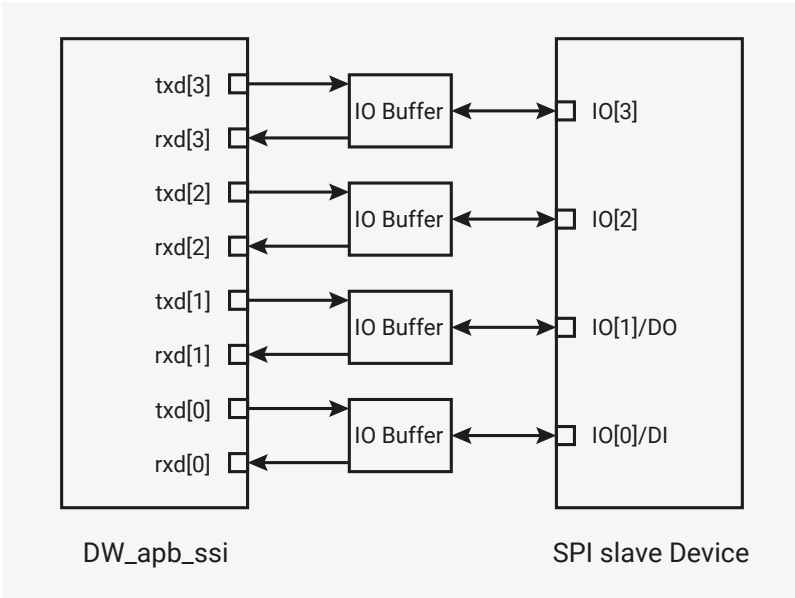

4.10.10.5. Dual Data-Rate (DDR) Support in SPI Operation

In standard operations, data transfer in SPI modes occur on either the positive or negative edge of the clock. For improved throughput, the dual data-rate transfer can be used for reading or writing to the memories.

The DDR mode supports the following modes of SPI protocol:

- SCPH=0 & SCPOL=0 (Mode 0)
- SCPH=1 & SCPOL=1 (Mode 3)

DDR commands enable data to be transferred on both edges of clock. Following are the different types of DDR commands:

- Address and data are transmitted (or received in case of data) in DDR format, while instruction is transmitted in standard format.
- Instruction, address, and data are all transmitted or received in DDR format.

The DDR_EN (SPI_CTRLR0[16]) bit is used to determine if the Address and data have to be transferred in DDR mode and INST_DDR_EN (SPI_CTRLR0[17]) bit is used to determine if Instruction must be transferred in DDR format. These bits

are only valid when the CTRLR0.SPI_FRF bit is set to be in Dual, or Quad mode.

Figure 158 describes a DDR write transfer where instructions are continued to be transmitted in standard format. In Figure 158, the value of N will be 7 if CTRLR0.SPI_FRF is set to 11b, 3 if CTRLR0.SPI_FRF is set to 10b , and 1 if CTRLR0.SPI_FRF is set to 01b.

Figure 158. DDR Transfer with SCPH=0 and SCPOL=0

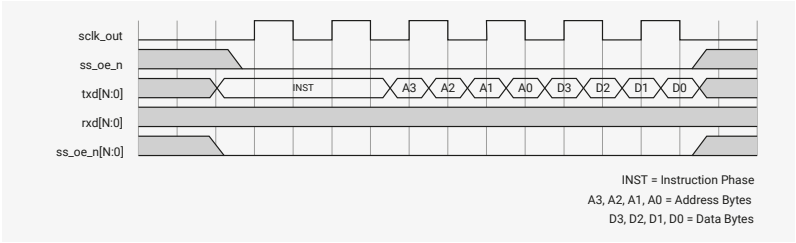

Figure 159 describes a DDR write transfer where instruction, address and data all are transferred in DDR format.

Figure 159. DDR Transfer with Instruction, Address and Data Transmitted in DDR Format

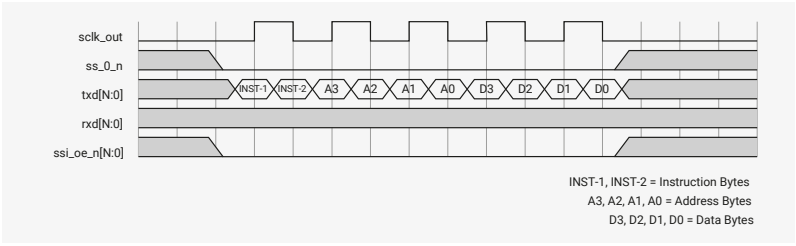

NOTE

In the DDR transfer, address and instruction cannot be programmed to a value of 0.

4.10.10.5.1. Transmitting Data in DDR Mode

In DDR mode, data is transmitted on both edges so that it is difficult to sample data correctly. DW_apb_ssi uses an internal register to determine the edge on which the data should be transmitted. This will ensure that the receiver is able to get a stable data while sampling. The internal register (DDR_DRIVE_EDGE) determines the edge on which the data is transmitted. DW_apb_ssi sends data with respect to baud clock, which is an integral multiple of the internal clock (ssi_clk * BAUDR). The data needs to be transmitted within half clock cycle (BAUDR/2), therefore the maximum value for DDR_DRIVE_EDGE is equal to [(BAUDR/2)-1]. If the programmed value of DDR_DRIVE_EDGE is 0 then data is transmitted edge-aligned with respect to sclk_out (baud clock). If the programmed value of DDR_DRIVE_EDGE is one then the data is transmitted one ssi_clk before the edge of sclk_out.

NOTE

If the baud rate is programmed to be two, then the data will always be edge aligned.

Figure 160, Figure 161, and Figure 162 show examples of how data is transmitted using different values of the DDR_DRIVE_EDGE register. The green arrows in these examples represent the points where data is driven. Baud rate used in all these examples is 12. In Figure 160, transmit edge and driving edge of the data are the same. This is default behavior in DDR mode.

Figure 160. Transmit Data With DDR_DRIVE_EDGE = 0

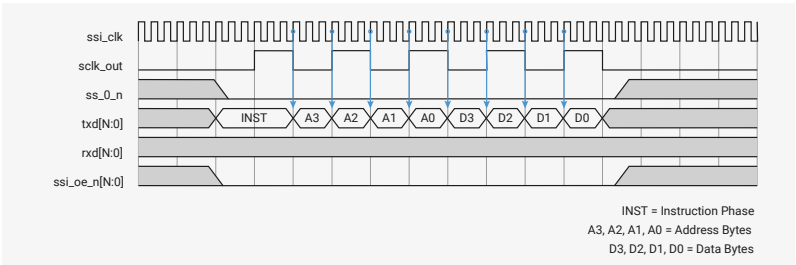

Figure 160 shows the default behavior in which the transmit and driving edge of the data is the same.

Figure 161. Transmit Data With DDR_DRIVE_EDGE = 1

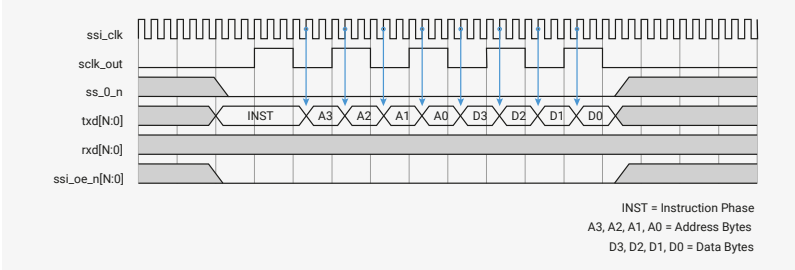

Figure 162. Transmit Data With DDR_DRIVE_EDGE = 2

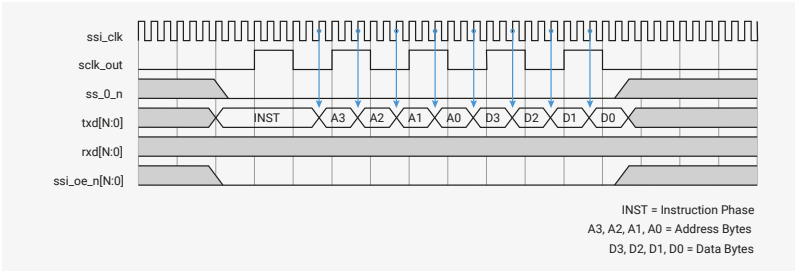

4.10.10.6. XIP Mode Support in SPI Mode

The eXecute In Place (XIP) mode enables transfer of SPI data directly through the APB interface without writing the data register of DW_apb_ssi. XIP mode is enabled in DW_apb_ssi when the XIP cache is enabled. This control signal indicates whether APB transfers are register read-write or XIP reads. When in XIP mode, DW_apb_ssi expects only read request on the APB interface. This request is translated to SPI read on the serial interface and soon after the data is received, the data is returned to the APB interface in the same transaction.

NOTE

- Only APB reads are supported during an XIP operation

The address length is derived from the SPI_CTRLR0.ADDR_L field, and relevant bits from paddr ([SPI_CTRLR0.ADDR_L-1:0]) are transferred as address to the SPI interface. XIP address is managed by the XIP cache controller.

4.10.10.6.1. Read Operation in XIP Mode

The XIP operation is supported only in enhanced SPI modes (Dual, Quad) of operation. Therefore, the CTRLR0.SPI_FRF bit should not be programmed to 0. An XIP read operation is divided into two phases:

- Address phase
- Data phase

For an XIP read operation

1. Set the SPI frame format and data frame size value in CTRLR0 register. Note that the value of the maximum data frame size is 32.
2. Set the Address length, Wait cycles, and transaction type in the SPI_CTRLR0 register. Note that the maximum address length is 32.

After these settings, a user can initiate a read transaction through the APB interface which will transferred to SPI peripheral using programmed values. Figure 163 shows the typical XIP transfer. The Value of N = 1, 3 and 7 for SPI mode Dual, and Quad modes, respectively.

Figure 163. Typical Read Operation in XIP Mode

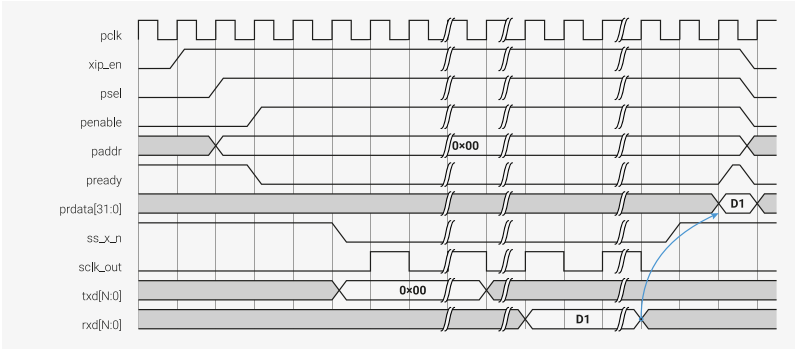

4.10.11. DMA Controller Interface

The DW_apb_ssi has built-in DMA capability; it has a handshaking interface to a DMA Controller to request and control transfers. The APB bus is used to perform the data transfer to or from the DMA.

NOTE

When the DW_apb_ssi interfaces to the DMA controller, the DMA controller is always a flow controller; that is, it controls the block size. This must be programmed by software in the DMA controller.

The DW_apb_ssi uses two DMA channels, one for the transmit data and one for the receive data. The DW_apb_ssi has these DMA registers:

DMACR

Control register to enable DMA operation.

DMATDLR

Register to set the transmit the FIFO level at which a DMA request is made.

DMARDLR

Register to set the receive FIFO level at which a DMA request is made.

The DW_apb_ssi uses the following handshaking signals to interface with the DMA controller.

- dma_tx_req
- dma_tx_single
- dma_tx_ack
- dma_rx_req
- dma_tx_req
- dma_tx_single
- dma_tx_ack
- dma_rx_req

To enable the DMA Controller interface on the DW_apb_ssi, you must write the DMA Control Register (DMACR). Writing a 1 into the TDMAE bit field of DMACR register enables the DW_apb_ssi transmit handshaking interface. Writing a 1 into the RDMAE bit field of the DMACR register enables the DW_apb_ssi receive handshaking interface.

Table 580 provides description for different DMA transmit data level values.

Table 580. DMA Transmit Data Level (DMATDL) Decode Value

DMATDL Value	Description
0000_0000	dma_tx_req is asserted when zero data entries are present in the transmit FIFO
0000_0001	dma_tx_req is asserted when one or less data entry is present in the transmit FIFO

0000_0010	dma_tx_req is asserted when two or less data entries are present in the transmit FIFO
…	…
0000_1101	dma_tx_req is asserted when 13 or less data entries are present in the transmit FIFO
0000_1110	dma_tx_req is asserted when 14 or less data entries are present in the transmit FIFO
0000_1111	dma_tx_req is asserted when 15 or less data entries are present in the transmit FIFO

Table 581 provides description for different DMA Receive Data Level values.

Table 581. DMA Receive Data Level (DMARDL) Decode Value

DMARDL Value	Description
0000_0000	dma_rx_req is asserted when one or more data entries are present in the receive FIFO
0000_0001	dma_rx_req is asserted when two or more data entries are present in the receive FIFO
0000_0010	dma_rx_req is asserted when three or more data entries are present in the receive FIFO
…	…
0000_1101	dma_rx_req is asserted when 14 or more data entries are present in the receive FIFO
0000_1110	dma_rx_req is asserted when 15 or more data entries are present in the receive FIFO
0000_1111	dma_rx_req is asserted when 16 data entries are present in the receive FIFO

4.10.11.1. Overview of Operation

As a block flow control device, the DMA Controller is programmed by the processor with the number of data items (block size) that are to be transmitted or received by the DW_apb_ssi.

The block is broken into a number of transactions, each initiated by a request from the DW_apb_ssi. The DMA Controller must also be programmed with the number of data items (in this case, DW_apb_ssi FIFO entries) to be transferred for each DMA request. This is also known as the burst transaction length.

Figure 164 shows a single block transfer, where the block size programmed into the DMA Controller is 12 and the burst transaction length is set to four. In this case, the block size is a multiple of the burst transaction length; therefore, the DMA block transfer consists of a series of burst transactions.

CAUTION

On RP2040, the burst transaction length of the SSI's DMA interface is fixed at four transfers. `SSI.DMARDLR` must always be equal to 4, which is the value it takes at reset. The SSI will then request a single transfer when it has between one and three items in its FIFO, and a 4-burst when it has four or more.

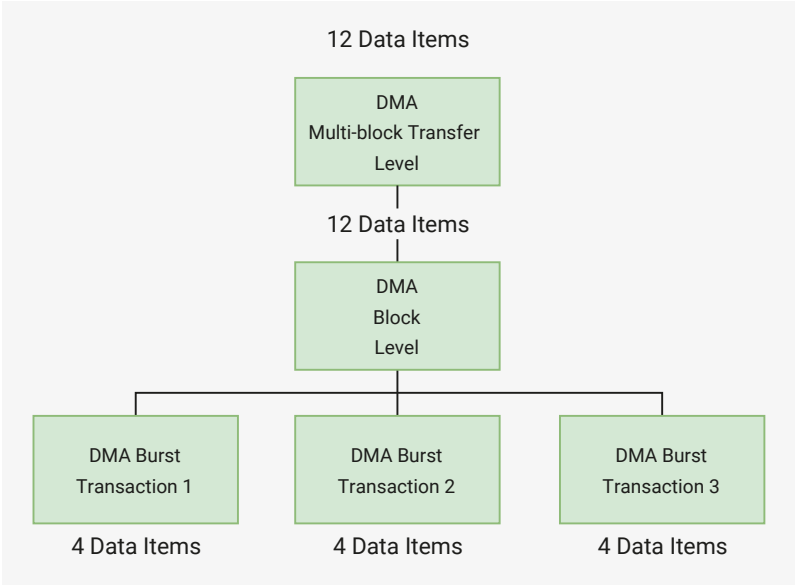

Figure 164. Breakdown of DMA Transfer into Burst Transactions. Block size, DMA.CTLx.BLOCKS_TS = 12. Number of data items per source burst transaction, DMA.CTLx.SRC_MSIZE = 4. SSI receive FIFO watermark level, SSI.DMARDLR + 1 = DMA.CTLx.SRC_MSIZE = 4

If the DW_apb_ssi makes a transmit request to this channel, four data items are written to the DW_apb_ssi transmit FIFO. Similarly, if the DW_apb_ssi makes a receive request to this channel, four data items are read from the DW_apb_ssi receive FIFO. Three separate requests must be made to this DMA channel before all 12 data items are written or read.

When the block size programmed into the DMA Controller is not a multiple of the burst transaction length, as shown in Figure 165, a series of burst transactions followed by single transactions are needed to complete the block transfer.

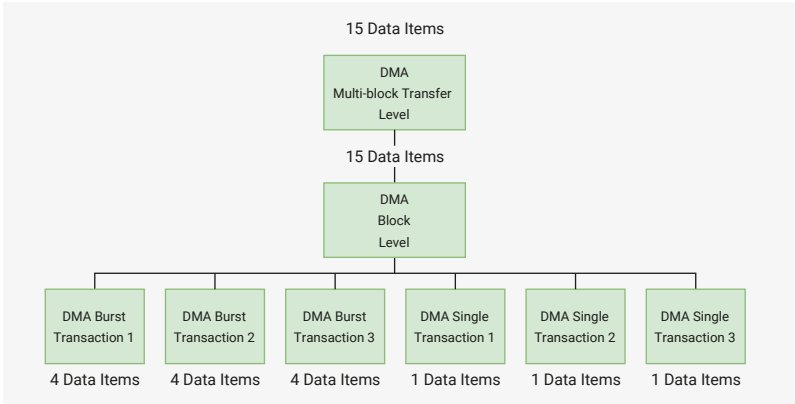

Figure 165. Breakdown of DMA Transfer into Single and Burst Transactions. Block size, DMA.CTLx.BLOCK_TS = 15. Number of data items per burst transaction, DMA.CTLx.DEST_MSIZE = 4. SSI transmit FIFO watermark level, SSI.DMATDLR = DMA.CTLx.DEST_MSIZE = 4

4.10.12. APB Interface

The host processor accesses data, control, and status information on the DW_apb_ssi through the APB interface. APB accesses to the DW_apb_ssi peripheral are described in the following subsections.

4.10.12.1. Control and Status Register APB Access

Control and status registers within the DW_apb_ssi are byte-addressable. The maximum width of the control or status register in the DW_apb_ssi is 16 bits. Therefore all read and write operations to the DW_apb_ssi control and status registers require only one APB access.

4.10.12.2. Data Register APB Access

The data register (DR) within the DW_apb_ssi is 32 bits wide in order to remain consistent with the maximum serial transfer size (data frame). An APB write operation to DR moves data from pwdata into the transmit FIFO buffer. An APB read operation from DR moves data from the receive FIFO buffer onto prdata.

The DW_apb_ssi DR can be written/read in one APB access.

NOTE

The DR register in the DW_apb_ssi occupies sixty-four 32-bit locations of the memory map to facilitate AHB burst transfers. There are no burst transactions on the APB bus itself, but DW_apb_ssi supports the AHB bursts that happen on the AHB side of the AHB/APB bridge. Writing to any of these address locations has the same effect as pushing the data from the pwdata bus into the transmit FIFO. Reading from any of these locations has the same effect as popping data from the receive FIFO onto the prdata bus. The FIFO buffers on the DW_apb_ssi are not addressable.

4.10.13. List of Registers

The SSI registers start at a base address of `0x18000000` (defined as XIP_SSI_BASE in SDK).

Table 582. List of SSI registers

Offset	Name	Info
0x00	CTRLR0	Control register 0
0x04	CTRLR1	Master Control register 1
0x08	SSIENR	SSI Enable
0x0c	MWCR	Microwire Control
0x10	SER	Slave enable
0x14	BAUDR	Baud rate
0x18	TXFTLR	TX FIFO threshold level
0x1c	RXFTLR	RX FIFO threshold level
0x20	TXFLR	TX FIFO level
0x24	RXFLR	RX FIFO level
0x28	SR	Status register
0x2c	IMR	Interrupt mask
0x30	ISR	Interrupt status
0x34	RISR	Raw interrupt status
0x38	TXOICR	TX FIFO overflow interrupt clear
0x3c	RXOICR	RX FIFO overflow interrupt clear
0x40	RXUICR	RX FIFO underflow interrupt clear
0x44	MSTICR	Multi-master interrupt clear
0x48	ICR	Interrupt clear
0x4c	DMACR	DMA control
0x50	DMATDLR	DMA TX data level
0x54	DMARDLR	DMA RX data level

Offset	Name	Info
0x58	IDR	Identification register
0x5c	SSI_VERSION_ID	Version ID
0x60	DR0	Data Register 0 (of 36)
0xf0	RX_SAMPLE_DLY	RX sample delay
0xf4	SPI_CTRLR0	SPI control
0xf8	TXD_DRIVE_EDGE	TX drive edge

SSI: CTRLR0 Register

Offset: 0x00

Description

Control register 0

Table 583. CTRLR0 Register

Bits	Description	Type	Reset
31:25	Reserved.	-	-
24	**SSTE**: Slave select toggle enable	RW	0x0
23	Reserved.	-	-
22:21	**SPI_FRF**: SPI frame format	RW	0x0
	Enumerated values:		
	0x0 → STD: Standard 1-bit SPI frame format; 1 bit per SCK, full-duplex		
	0x1 → DUAL: Dual-SPI frame format; two bits per SCK, half-duplex		
	0x2 → QUAD: Quad-SPI frame format; four bits per SCK, half-duplex		
20:16	**DFS_32**: Data frame size in 32b transfer mode Value of n → n+1 clocks per frame.	RW	0x00
15:12	**CFS**: Control frame size Value of n → n+1 clocks per frame.	RW	0x0
11	**SRL**: Shift register loop (test mode)	RW	0x0
10	**SLV_OE**: Slave output enable	RW	0x0
9:8	**TMOD**: Transfer mode	RW	0x0
	Enumerated values:		
	0x0 → TX_AND_RX: Both transmit and receive		
	0x1 → TX_ONLY: Transmit only (not for FRF == 0, standard SPI mode)		
	0x2 → RX_ONLY: Receive only (not for FRF == 0, standard SPI mode)		
	0x3 → EEPROM_READ: EEPROM read mode (TX then RX; RX starts after control data TX'd)		
7	**SCPOL**: Serial clock polarity	RW	0x0
6	**SCPH**: Serial clock phase	RW	0x0
5:4	**FRF**: Frame format	RW	0x0
3:0	**DFS**: Data frame size	RW	0x0

SSI: CTRLR1 Register

Offset: 0x04

Description

Master Control register 1

Table 584. CTRLR1 Register

Bits	Description	Type	Reset
31:16	Reserved.	-	-
15:0	**NDF**: Number of data frames	RW	0x0000

SSI: SSIENR Register

Offset: 0x08

Description

SSI Enable

Table 585. SSIENR Register

Bits	Description	Type	Reset
31:1	Reserved.	-	-
0	**SSI_EN**: SSI enable	RW	0x0

SSI: MWCR Register

Offset: 0x0c

Description

Microwire Control

Table 586. MWCR Register

Bits	Description	Type	Reset
31:3	Reserved.	-	-
2	**MHS**: Microwire handshaking	RW	0x0
1	**MDD**: Microwire control	RW	0x0
0	**MWMOD**: Microwire transfer mode	RW	0x0

SSI: SER Register

Offset: 0x10

Description

Slave enable

Table 587. SER Register

Bits	Description	Type	Reset
31:1	Reserved.	-	-
0	For each bit: 0 → slave not selected 1 → slave selected	RW	0x0

SSI: BAUDR Register

Offset: 0x14

Description

Baud rate

Table 588. BAUDR Register

Bits	Description	Type	Reset
31:16	Reserved.	-	-
15:0	**SCKDV**: SSI clock divider	RW	0x0000

SSI: TXFTLR Register

Offset: 0x18

Description

TX FIFO threshold level

Table 589. TXFTLR Register

Bits	Description	Type	Reset
31:8	Reserved.	-	-
7:0	**TFT**: Transmit FIFO threshold	RW	0x00

SSI: RXFTLR Register

Offset: 0x1c

Description

RX FIFO threshold level

Table 590. RXFTLR Register

Bits	Description	Type	Reset
31:8	Reserved.	-	-
7:0	**RFT**: Receive FIFO threshold	RW	0x00

SSI: TXFLR Register

Offset: 0x20

Description

TX FIFO level

Table 591. TXFLR Register

Bits	Description	Type	Reset
31:8	Reserved.	-	-
7:0	**TFTFL**: Transmit FIFO level	RO	0x00

SSI: RXFLR Register

Offset: 0x24

Description

RX FIFO level

Table 592. RXFLR Register

Bits	Description	Type	Reset
31:8	Reserved.	-	-
7:0	**RXTFL**: Receive FIFO level	RO	0x00

SSI: SR Register

Offset: 0x28

Description

Status register

Table 593. SR Register

Bits	Description	Type	Reset
31:7	Reserved.	-	-
6	**DCOL**: Data collision error	RO	0x0
5	**TXE**: Transmission error	RO	0x0
4	**RFF**: Receive FIFO full	RO	0x0
3	**RFNE**: Receive FIFO not empty	RO	0x0
2	**TFE**: Transmit FIFO empty	RO	0x0
1	**TFNF**: Transmit FIFO not full	RO	0x0
0	**BUSY**: SSI busy flag	RO	0x0

SSI: IMR Register

Offset: 0x2c

Description

Interrupt mask

Table 594. IMR Register

Bits	Description	Type	Reset
31:6	Reserved.	-	-
5	**MSTIM**: Multi-master contention interrupt mask	RW	0x0
4	**RXFIM**: Receive FIFO full interrupt mask	RW	0x0
3	**RXOIM**: Receive FIFO overflow interrupt mask	RW	0x0
2	**RXUIM**: Receive FIFO underflow interrupt mask	RW	0x0
1	**TXOIM**: Transmit FIFO overflow interrupt mask	RW	0x0
0	**TXEIM**: Transmit FIFO empty interrupt mask	RW	0x0

SSI: ISR Register

Offset: 0x30

Description

Interrupt status

Table 595. ISR Register

Bits	Description	Type	Reset
31:6	Reserved.	-	-
5	**MSTIS**: Multi-master contention interrupt status	RO	0x0
4	**RXFIS**: Receive FIFO full interrupt status	RO	0x0
3	**RXOIS**: Receive FIFO overflow interrupt status	RO	0x0
2	**RXUIS**: Receive FIFO underflow interrupt status	RO	0x0
1	**TXOIS**: Transmit FIFO overflow interrupt status	RO	0x0
0	**TXEIS**: Transmit FIFO empty interrupt status	RO	0x0

SSI: RISR Register

Offset: 0x34

Description

Raw interrupt status

Table 596. RISR Register

Bits	Description	Type	Reset
31:6	Reserved.	-	-
5	**MSTIR**: Multi-master contention raw interrupt status	RO	0x0
4	**RXFIR**: Receive FIFO full raw interrupt status	RO	0x0
3	**RXOIR**: Receive FIFO overflow raw interrupt status	RO	0x0
2	**RXUIR**: Receive FIFO underflow raw interrupt status	RO	0x0
1	**TXOIR**: Transmit FIFO overflow raw interrupt status	RO	0x0
0	**TXEIR**: Transmit FIFO empty raw interrupt status	RO	0x0

SSI: TXOICR Register

Offset: 0x38

Description

TX FIFO overflow interrupt clear

Table 597. TXOICR Register

Bits	Description	Type	Reset
31:1	Reserved.	-	-
0	Clear-on-read transmit FIFO overflow interrupt	RO	0x0

SSI: RXOICR Register

Offset: 0x3c

Description

RX FIFO overflow interrupt clear

Table 598. RXOICR Register

Bits	Description	Type	Reset
31:1	Reserved.	-	-
0	Clear-on-read receive FIFO overflow interrupt	RO	0x0

SSI: RXUICR Register

Offset: 0x40

Description

RX FIFO underflow interrupt clear

Table 599. RXUICR Register

Bits	Description	Type	Reset
31:1	Reserved.	-	-
0	Clear-on-read receive FIFO underflow interrupt	RO	0x0

SSI: MSTICR Register

Offset: 0x44

Description

Multi-master interrupt clear

Table 600. MSTICR Register

Bits	Description	Type	Reset
31:1	Reserved.	-	-
0	Clear-on-read multi-master contention interrupt	RO	0x0

SSI: ICR Register

Offset: 0x48

Description

Interrupt clear

Table 601. ICR Register

Bits	Description	Type	Reset
31:1	Reserved.	-	-
0	Clear-on-read all active interrupts	RO	0x0

SSI: DMACR Register

Offset: 0x4c

Description

DMA control

Table 602. DMACR Register

Bits	Description	Type	Reset
31:2	Reserved.	-	-
1	**TDMAE**: Transmit DMA enable	RW	0x0
0	**RDMAE**: Receive DMA enable	RW	0x0

SSI: DMATDLR Register

Offset: 0x50

Description

DMA TX data level

Table 603. DMATDLR Register

Bits	Description	Type	Reset
31:8	Reserved.	-	-
7:0	**DMATDL**: Transmit data watermark level	RW	0x00

SSI: DMARDLR Register

Offset: 0x54

Description

DMA RX data level

Table 604. DMARDLR Register

Bits	Description	Type	Reset
31:8	Reserved.	-	-
7:0	**DMARDL**: Receive data watermark level (DMARDLR+1)	RW	0x00

SSI: IDR Register

Offset: 0x58

Description

Identification register

Table 605. IDR Register

Bits	Description	Type	Reset
31:0	**IDCODE**: Peripheral dentification code	RO	0x51535049

SSI: SSI_VERSION_ID Register

Offset: 0x5c

Description

Version ID

Table 606. SSI_VERSION_ID Register

Bits	Description	Type	Reset
31:0	**SSI_COMP_VERSION**: SNPS component version (format X.YY)	RO	0x3430312a

SSI: DR0 Register

Offset: 0x60

Description

Data Register 0 (of 36)

Table 607. DR0 Register

Bits	Description	Type	Reset
31:0	**DR**: First data register of 36	RW	0x00000000

SSI: RX_SAMPLE_DLY Register

Offset: 0xf0

Description

RX sample delay

Table 608. RX_SAMPLE_DLY Register

Bits	Description	Type	Reset
31:8	Reserved.	-	-
7:0	**RSD**: RXD sample delay (in SCLK cycles)	RW	0x00

SSI: SPI_CTRLR0 Register

Offset: 0xf4

Description

SPI control

Table 609. SPI_CTRLR0 Register

Bits	Description	Type	Reset
31:24	**XIP_CMD**: SPI Command to send in XIP mode (INST_L = 8-bit) or to append to Address (INST_L = 0-bit)	RW	0x03
23:19	Reserved.	-	-
18	**SPI_RXDS_EN**: Read data strobe enable	RW	0x0
17	**INST_DDR_EN**: Instruction DDR transfer enable	RW	0x0
16	**SPI_DDR_EN**: SPI DDR transfer enable	RW	0x0
15:11	**WAIT_CYCLES**: Wait cycles between control frame transmit and data reception (in SCLK cycles)	RW	0x00
10	Reserved.	-	-
9:8	**INST_L**: Instruction length (0/4/8/16b)	RW	0x0
	Enumerated values:		
	0x0 → NONE: No instruction		
	0x1 → 4B: 4-bit instruction		
	0x2 → 8B: 8-bit instruction		
	0x3 → 16B: 16-bit instruction		
7:6	Reserved.	-	-
5:2	**ADDR_L**: Address length (0b-60b in 4b increments)	RW	0x0
1:0	**TRANS_TYPE**: Address and instruction transfer format	RW	0x0
	Enumerated values:		
	0x0 → 1C1A: Command and address both in standard SPI frame format		
	0x1 → 1C2A: Command in standard SPI format, address in format specified by FRF		
	0x2 → 2C2A: Command and address both in format specified by FRF (e.g. Dual-SPI)		

SSI: TXD_DRIVE_EDGE Register

Offset: 0xf8

Description

TX drive edge

Table 610. TXD_DRIVE_EDGE Register

Bits	Description	Type	Reset
31:8	Reserved.	-	-
7:0	**TDE**: TXD drive edge	RW	0x00

Chapter 5. Electrical and Mechanical

Physical and electrical details of the RP2040 chip.

5.1. Package

Figure 166. Top down view (left, top) and side view (right, top), along with bottom view (left, bottom) of the RP2040 QFN-56 package

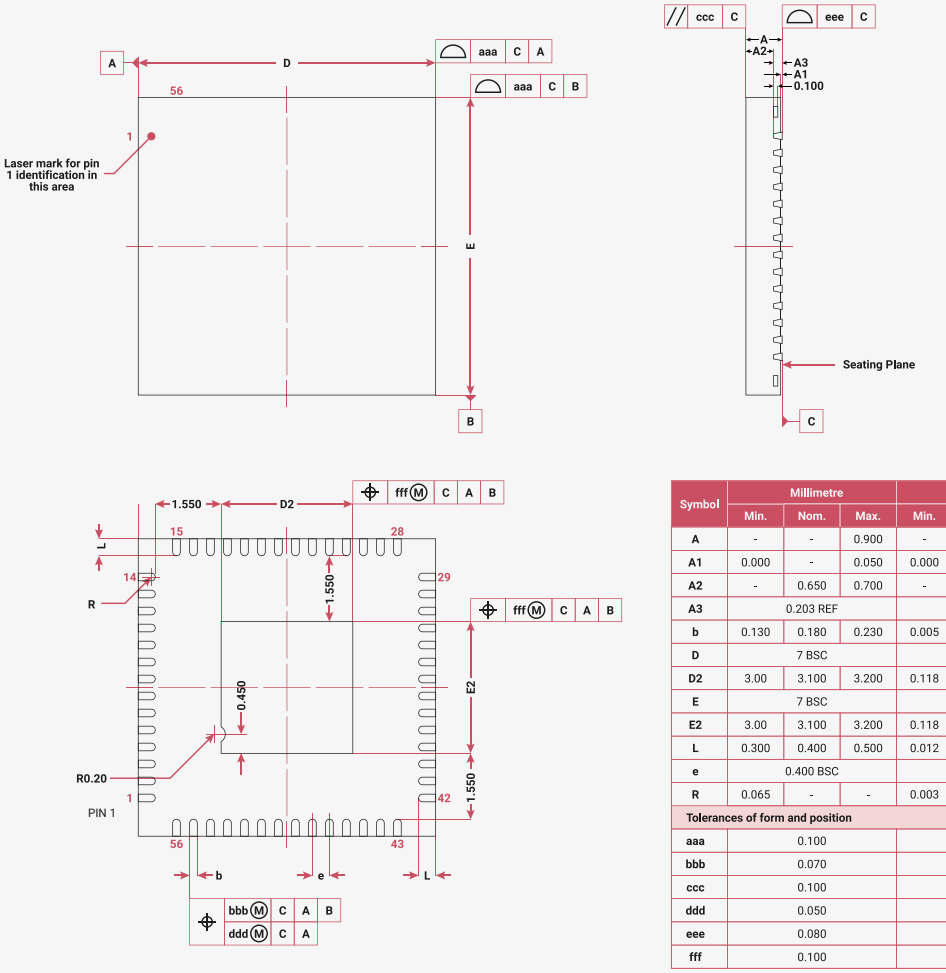

Symbol	Millimetre			Inch		
	Min.	Nom.	Max.	Min.	Nom.	Max.
A	-	-	0.900	-	-	0.035
A1	0.000	-	0.050	0.000	-	0.002
A2	-	0.650	0.700	-	0.026	0.028
A3	0.203 REF			0.008 REF		
b	0.130	0.180	0.230	0.005	0.007	0.009
D	7 BSC			0.276 BSC		
D2	3.00	3.100	3.200	0.118	0.122	0.126
E	7 BSC			0.276 BSC		
E2	3.00	3.100	3.200	0.118	0.122	0.126
L	0.300	0.400	0.500	0.012	0.016	0.020
e	0.400 BSC			0.016 BSC		
R	0.065	-	-	0.003	-	-
Tolerances of form and position						
aaa	0.100			0.004		
bbb	0.070			0.003		
ccc	0.100			0.004		
ddd	0.050			0.002		
eee	0.080			0.003		
fff	0.100			0.004		

NOTE

There is no standard size for the central GND pad (or ePad) with QFNs. However, the one on RP2040 is smaller than most. This means that standard 0.4mm QFN-56 footprints provided with CAD tools may need adjusting. This gives the opportunity to route between the central pad and the ones on the periphery, which can help with maintaining power and ground integrity on cheaper PCBs. See Minimal Design Example for an example.

NOTE

Leads have a matte Tin (Sn) finish. Annealing is done post-plating, baking at 150°C for 1 hour. Minimum thickness for lead plating is 8 micromns, and the intermediate layer material is CuFe2P (roughened Copper (Cu)).

5.1.1. Thermal characteristics

The thermal characteristics of the package are shown in Table 611.

Table 611. Thermal data for the RP2040 QFN 56 package.

θ_{JA} (°C/W)	ψ_{JT} (°C/W)	ψ_{JB} (°C/W)	T_J (°C)	T_T (°C)	θ_{JC} (°C/W)	θ_{JB} (°C/W)
48.00	0.80	29.20	42.00	41.8	19.01	29.03

5.1.2. Recommended PCB Footprint

Figure 167. Recommended PCB Footprint for the RP2040 QFN-56 package

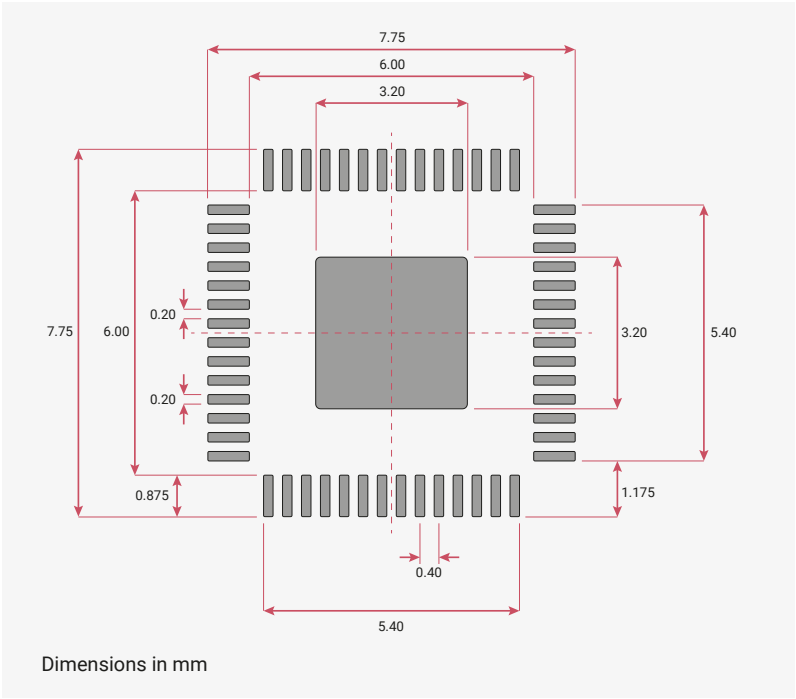

5.1.3. Package markings

The RP2040 7×7 mm QFN-56 package is marked as seen in Figure 168, with specifications as shown in Table 612. Coordinate origin is bottom-left of the package.

Figure 168. Package marking format

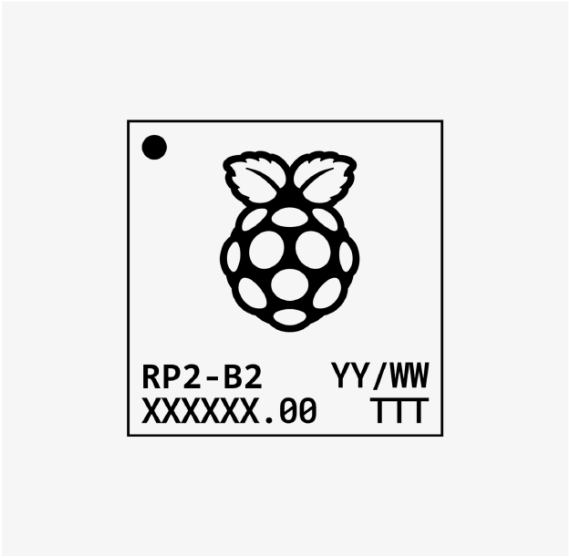

Table 612. Marking requirements and dimensions

Line	Step	Item	Coord. X	Coord. Y	Char. Height	Char. Width	Char. Space
1	1	Pin 1 Dot	0.5	6	0.5	0.5	
2	1	Logo	3.5	2.395	3.83	3.05	
3	1	RP2-B2	0.555	1.585	0.61	0.37	0.09
3	2	YY/WW	4.235	1.585	0.61	0.37	0.09
4	1	XXXXXX.00	0.555	0.775	0.61	0.37	0.09
4	2	TTT (optional)	5.155	0.775	0.61	0.37	0.09

NOTE

At Line 3, Step 1, the "RP2-B2" marking denotes device name "RP2" and silicon revision "B2."

5.2. Storage conditions

In order to preserve the shelf and floor life of bare RP2040 devices, the recommended storage conditions in line with J-STD (020E & 033D) for RP2040 (classified MSL1) should be kept under 30°C and 85% relative humidity.

5.3. Solder profile

RP2040 is a Pb-free part, with a T_p value of 260°C.

All temperatures refer to the center of the package, measured on the package body surface that is facing up during assembly reflow (live-bug orientation). If parts are reflowed in other than the normal live-bug assembly reflow orientation (i.e., dead-bug), T_p shall be within ±2°C of the live-bug T_p and still meet the T_c requirements; otherwise, the profile shall be adjusted to achieve the latter.

Figure 169. Classification profile (not to scale)

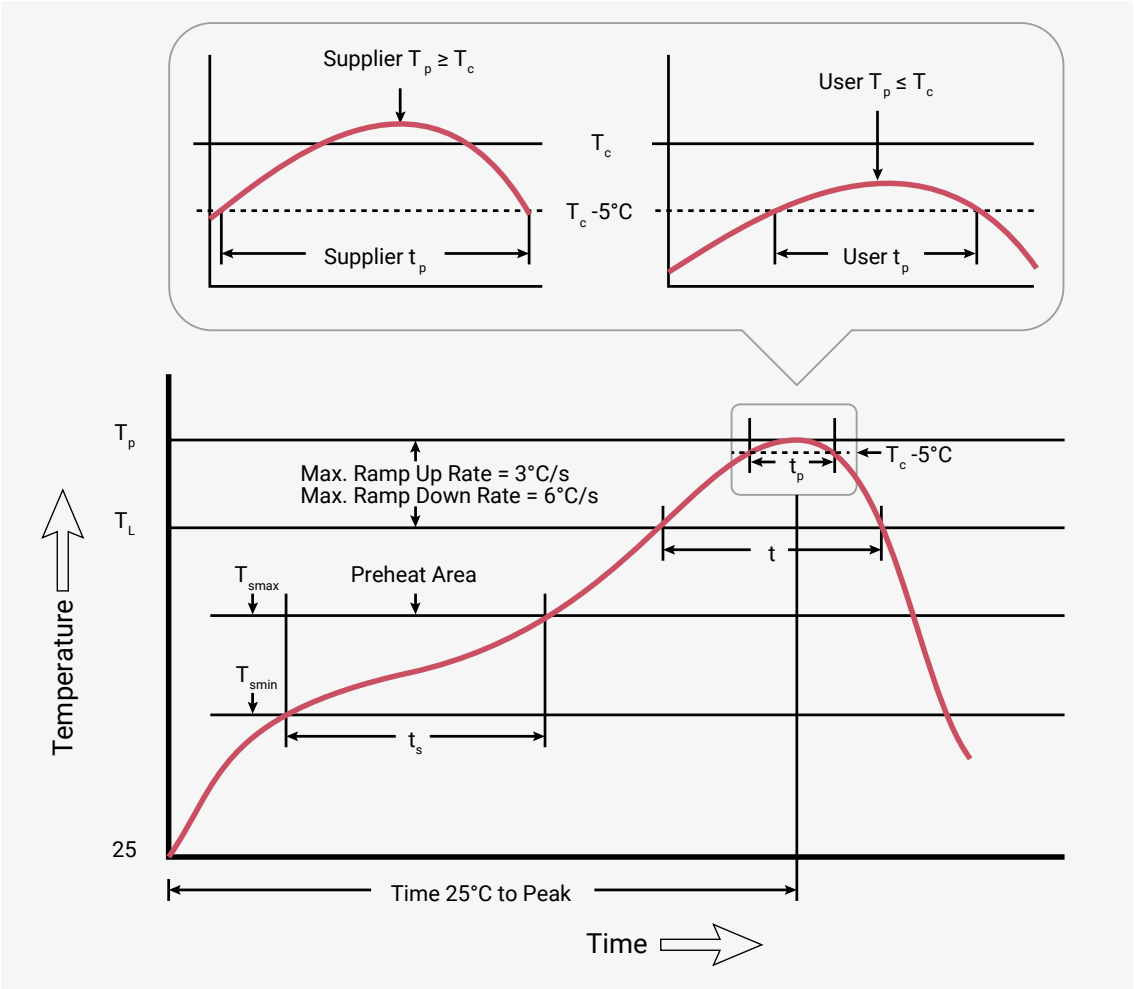

NOTE

Reflow profiles in this document are for classification/preconditioning, and are not meant to specify board assembly profiles. Actual board assembly profiles should be developed based on specific process needs and board designs, and should not exceed the parameters in Table 613.

Table 613. Solder profile values

Profile feature	Value
Temperature min (T_{smin})	150°C
Temperature max (T_{smax})	200°C
Time (t_s) from (T_{smin} to T_{smax})	60 — 120 seconds
Ramp-up rate (T_L to T_p)	3°C/second max.
Liquidous temperature (T_L)	217°C
Time (t_L) maintained above T_L	60 to 150 seconds
Peak package body temperature (T_p)	260°C
Classification temperature (T_c)	260°C
Time (t_p) within 5°C of the specified classification temperature (T_c)	30 seconds
Ramp-down rate (T_p to T_L)	6°C/second max.
Time 25°C to peak temperature	8 minutes max.

5.4. Compliance

RP2040 is compliant to Moisture Sensitivity Level 1.

RP2040 is compliant to the requirement of REACH Substances of Very High Concern (SVHC) that ECHA announced on 25 June 2020.

RP2040 is compliant to the requirement and standard of Controlled Environment-related Substance of RoHS directive (EU) 2011/65/EU and directive (EU) 2015/863.

Package Level reliability qualifications carried out on RP2040:

- Temperature Cycling per JESD22-A104
- HAST per JESD22-A110
- HTSL per JESD22-A103

NOTE

A tin whiskers test is not performed as RP2040 is a bottom only termination device (QFN package) which not applicable to JEDEC standard (JESD201A).

5.5. Pinout

5.5.1. Pin Locations

Figure 170. RP2040 QFN-56 package pinout

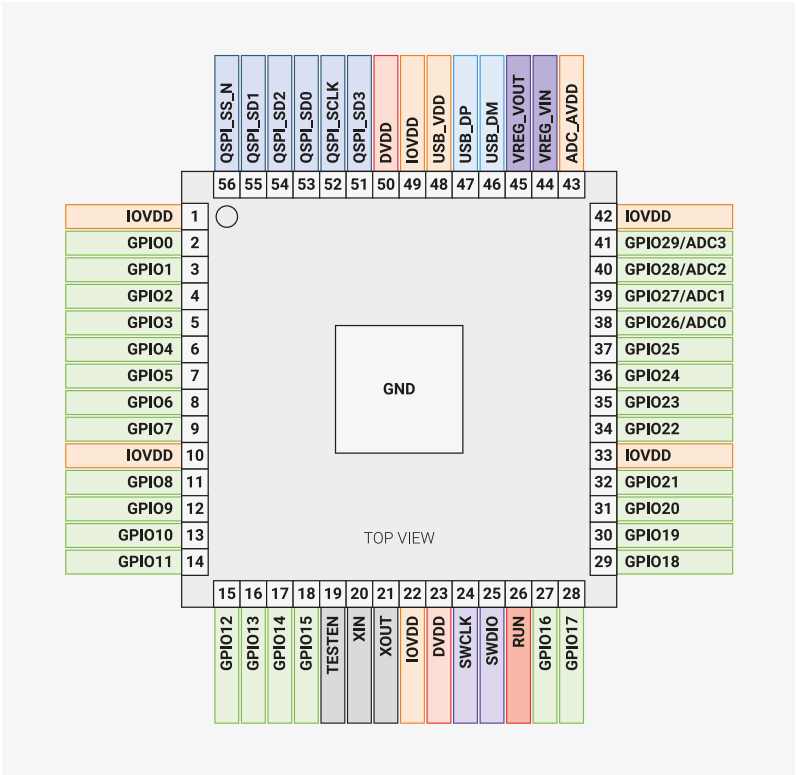

5.5.2. Pin Definitions

5.5.2.1. Pin Types

In the following GPIO Pin table (Table 615), the pin types are defined as shown below.

Table 614. Pin Types

Pin Type	Direction	Description
Digital In	Input only	**Standard Digital**. Programmable Pull-Up, Pull-Down, Slew Rate, Schmitt Trigger and Drive Strength. Default Drive Strength is 4mA.
Digital IO	Bi-directional	
Digital In (FT)	Input only	**Fault Tolerant Digital**. These pins are described as Fault Tolerant, which in this case means that very little current flows into the pin whilst it is below 3.63V and IOVDD is 0V. There is also enhanced ESD protection on these pins. Programmable Pull-Up, Pull-Down, Slew Rate, Schmitt Trigger and Drive Strength. Default Drive Strength is 4mA.
Digital IO (FT)	Bi-directional	
Digital IO / Analogue	Bi-directional (digital), Input (Analogue)	**Standard Digital and ADC input**. Programmable Pull-Up, Pull-Down, Slew Rate, Schmitt Trigger and Drive Strength. Default Drive Strength is 4mA.
USB IO	Bi-directional	These pins are for USB use, and contain internal pull-up and pull-down resistors, as per the USB specification. **Note** that external 27Ω series resistors are required for USB operation.
Analogue (XOSC)		Oscillator input pins for attaching a 12MHz crystal. Alternatively, XIN may be driven by a square wave.

5.5.2.2. Pin List

Table 615. GPIO pins

Name	Number	Type	Power Domain	Reset State	Description
GPIO0	2	Digital IO (FT)	IOVDD	Pull-Down	User IO
GPIO1	3	Digital IO (FT)	IOVDD	Pull-Down	User IO
GPIO2	4	Digital IO (FT)	IOVDD	Pull-Down	User IO
GPIO3	5	Digital IO (FT)	IOVDD	Pull-Down	User IO
GPIO4	6	Digital IO (FT)	IOVDD	Pull-Down	User IO
GPIO5	7	Digital IO (FT)	IOVDD	Pull-Down	User IO
GPIO6	8	Digital IO (FT)	IOVDD	Pull-Down	User IO
GPIO7	9	Digital IO (FT)	IOVDD	Pull-Down	User IO
GPIO8	11	Digital IO (FT)	IOVDD	Pull-Down	User IO
GPIO9	12	Digital IO (FT)	IOVDD	Pull-Down	User IO
GPIO10	13	Digital IO (FT)	IOVDD	Pull-Down	User IO
GPIO11	14	Digital IO (FT)	IOVDD	Pull-Down	User IO
GPIO12	15	Digital IO (FT)	IOVDD	Pull-Down	User IO
GPIO13	16	Digital IO (FT)	IOVDD	Pull-Down	User IO
GPIO14	17	Digital IO (FT)	IOVDD	Pull-Down	User IO
GPIO15	18	Digital IO (FT)	IOVDD	Pull-Down	User IO

Name	Number	Type	Power Domain	Reset State	Description
GPIO16	27	Digital IO (FT)	IOVDD	Pull-Down	User IO
GPIO17	28	Digital IO (FT)	IOVDD	Pull-Down	User IO
GPIO18	29	Digital IO (FT)	IOVDD	Pull-Down	User IO
GPIO19	30	Digital IO (FT)	IOVDD	Pull-Down	User IO
GPIO20	31	Digital IO (FT)	IOVDD	Pull-Down	User IO
GPIO21	32	Digital IO (FT)	IOVDD	Pull-Down	User IO
GPIO22	34	Digital IO (FT)	IOVDD	Pull-Down	User IO
GPIO23	35	Digital IO (FT)	IOVDD	Pull-Down	User IO
GPIO24	36	Digital IO (FT)	IOVDD	Pull-Down	User IO
GPIO25	37	Digital IO (FT)	IOVDD	Pull-Down	User IO
GPIO26 / ADC0	38	Digital IO / Analogue	IOVDD / ADC_AVDD	Pull-Down	User IO or ADC input
GPIO27 / ADC1	39	Digital IO / Analogue	IOVDD / ADC_AVDD	Pull-Down	User IO or ADC input
GPIO28 / ADC2	40	Digital IO / Analogue	IOVDD / ADC_AVDD	Pull-Down	User IO or ADC input
GPIO29 / ADC3	41	Digital IO / Analogue	IOVDD / ADC_AVDD	Pull-Down	User IO or ADC input

Table 616. QSPI pins

Name	Number	Type	Power Domain	Reset State	Description
QSPI_SD3	51	Digital IO	IOVDD		QSPI data
QSPI_SCLK	52	Digital IO	IOVDD	Pull-Down	QSPI clock
QSPI_SD0	53	Digital IO	IOVDD		QSPI data
QSPI_SD2	54	Digital IO	IOVDD		QSPI data
QSPI_SD1	55	Digital IO	IOVDD		QSPI data
QSPI_CSn	56	Digital IO	IOVDD	Pull-Up	QSPI chip select

Table 617. Crystal oscillator pins

Name	Number	Type	Power Domain	Description
XIN	20	Analogue (XOSC)	IOVDD	Crystal oscillator. XIN may also be driven by a square wave.
XOUT	21	Analogue (XOSC)	IOVDD	Crystal oscillator.

Table 618. Serial wire debug pins

Name	Number	Type	Power Domain	Reset State	Description
SWCLK	24	Digital In (FT)	IOVDD	Pull-Up	Debug clock
SWD	25	Digital IO (FT)	IOVDD	Pull-Up	Debug data

Table 619. Miscellaneous pins

Name	Number	Type	Power Domain	Reset State	Description
RUN	26	Digital In (FT)	IOVDD	Pull-Up	Chip enable / reset

Name	Number	Type	Power Domain	Reset State	Description
TESTEN	19	Digital In	IOVDD	Pull-Down	Test enable (connect to Gnd)

Table 620. USB pins

Name	Number	Type	Power Domain	Description
USB_DP	47	USB IO	USB_VDD	USB Data +ve. 27Ω series resistor required for USB operation
USB_DM	46	USB IO	USB_VDD	USB Data -ve. 27Ω series resistor required for USB operation

Table 621. Power supply pins

Name	Number(s)	Description
IOVDD	1, 10, 22, 33, 42, 49	IO supply
DVDD	23, 50	Core supply
VREG_VIN	44	Voltage regulator input supply
VREG_VOUT	45	Voltage regulator output
USB_VDD	48	USB supply
ADC_AVDD	43	ADC supply
GND	57	Common ground connection via central pad

5.5.3. Pin Specifications

The following electrical specifications are obtained from characterisation over the specified temperature and voltage ranges, as well as process variation, unless the specification is marked as 'Simulated'. In this case, the data is for information purposes only, and is not guaranteed.

5.5.3.1. Absolute Maximum Ratings

Table 622. Absolute maximum ratings for digital IO (Standard and Fault Tolerant)

Parameter	Symbol	Minimum	Maximum	Units	Comment
I/O Supply Voltage	IOVDD	-0.5	3.63	V	
Voltage at IO	V_{PIN}	-0.5	IOVDD + 0.5	V	

5.5.3.2. ESD Performance

Table 623. ESD performance for all pins, unless otherwise stated

Parameter	Symbol	Maximum	Units	Comment
Human Body Model	HBM	2	kV	Compliant with JEDEC specification JS-001-2012 (April 2012)

Parameter	Symbol	Maximum	Units	Comment
Human Body Model ***Digital (FT) pins only***	HBM	4	kV	Compliant with JEDEC specification JS-001-2012 (April 2012)
Charged Device Model	CDM	500	V	Compliant with JESD22-C101E (December 2009)

5.5.3.3. Thermal Performance

Table 624. Thermal Performance

Parameter	Symbol	Minimum	Typical	Maximum	Units	Comment
Case Temperature	T_C	-40		85	°C	

5.5.3.4. IO Electrical Characteristics

Table 625. Digital IO characteristics - Standard and FT unless otherwise stated

Parameter	Symbol	Minimum	Maximum	Units	Comment
Pin Input Leakage Current	I_{IN}		1	µA	
Input Voltage High @ IOVDD=1.8V	V_{IH}	0.65 * IOVDD	IOVDD + 0.3	V	
Input Voltage High @ IOVDD=2.5V	V_{IH}	1.7	IOVDD + 0.3	V	
Input Voltage High @ IOVDD=3.3V	V_{IH}	2	IOVDD + 0.3	V	
Input Voltage Low @ IOVDD=1.8V	V_{IL}	-0.3	0.35 * IOVDD	V	
Input Voltage Low @ IOVDD=2.5V	V_{IL}	-0.3	0.7	V	
Input Voltage Low @ IOVDD=3.3V	V_{IL}	-0.3	0.8	V	
Input Hysteresis Voltage @ IOVDD=1.8V	V_{HYS}	0.1 * IOVDD		V	Schmitt Trigger enabled
Input Hysteresis Voltage @ IOVDD=2.5V	V_{HYS}	0.2		V	Schmitt Trigger enabled
Input Hysteresis Voltage @ IOVDD=3.3V	V_{HYS}	0.2		V	Schmitt Trigger enabled
Output Voltage High @ IOVDD=1.8V	V_{OH}	1.24	IOVDD	V	I_{OH} = 2, 4, 8 or 12mA depending on setting

Parameter	Symbol	Minimum	Maximum	Units	Comment
Output Voltage High @ IOVDD=2.5V	V_{OH}	1.78	IOVDD	V	I_{OH} = 2, 4, 8 or 12mA depending on setting
Output Voltage High @ IOVDD=3.3V	V_{OH}	2.62	IOVDD	V	I_{OH} = 2, 4, 8 or 12mA depending on setting
Output Voltage Low @ IOVDD=1.8V	V_{OL}	0	0.3	V	I_{OL} = 2, 4, 8 or 12mA depending on setting
Output Voltage Low @ IOVDD=2.5V	V_{OL}	0	0.4	V	I_{OL} = 2, 4, 8 or 12mA depending on setting
Output Voltage Low @ IOVDD=3.3V	V_{OL}	0	0.5	V	I_{OL} = 2, 4, 8 or 12mA depending on setting
Pull-Up Resistance	R_{PU}	50	80	kΩ	
Pull-Down Resistance	R_{PD}	50	80	kΩ	
Maximum Total IOVDD current	I_{IOVDD_MAX}		50	mA	Sum of all current being sourced by GPIO and QSPI pins
Maximum Total VSS current due to IO (IOVSS)	I_{IOVSS_MAX}		50	mA	Sum of all current being sunk into GPIO and QSPI pins

Table 626. USB IO characteristics

Parameter	Symbol	Minimum	Maximum	Units	Comment
Pin Input Leakage Current	I_{IN}		1	µA	
Single Ended Input Voltage High	V_{IHSE}	2		V	
Single Ended Input Voltage Low	V_{ILSE}		0.8	V	
Differential Input Voltage High	V_{IHDIFF}	0.2		V	
Differential Input Voltage Low	V_{ILDIFF}		-0.2	V	
Output Voltage High	V_{OH}	2.8	USB_VDD	V	
Output Voltage Low	V_{OL}	0	0.3	V	
Pull-Up Resistance - RPU2	R_{PU2}	0.873	1.548	kΩ	

Parameter	Symbol	Minimum	Maximum	Units	Comment
Pull-Up Resistance - RPU1&2	$R_{PU1\&2}$	1.398	3.063	kΩ	
Pull-Down Resistance	R_{PD}	14.25	15.75	kΩ	

Table 627. ADC characteristics

Parameter	Symbol	Minimum	Maximum	Units	Comment
ADC Input Voltage Range	V_{PIN_ADC}	0	ADC_AVDD	V	
Effective Number of Bits	ENOB	8.7		bits	See Section 4.9.3
Resolved Bits			12	bits	
ADC Input Impedance	R_{IN_ADC}	100		kΩ	

Table 628. Oscillator pin characteristics when using a Square Wave input

Parameter	Symbol	Minimum	Maximum	Units	Comment
Input Voltage High	V_{IH}	0.65*IOVDD	IOVDD + 0.3	V	XIN only. XOUT floating
Input Voltage Low	V_{IL}	0	0.35*IOVDD	V	XIN only. XOUT floating

See Section 2.16 for more details on the Oscillator, and Minimal Design Example for information on crystal usage.

5.5.3.5. Interpreting GPIO output voltage specifications

The GPIOs on RP2040 have four different output drive strengths, which are nominally called 2, 4, 8 and 12mA modes. These are not hard limits, nor do they mean that they will always be sourcing (or sinking) the selected amount of milliamps. The amount of current a GPIO sources or sinks is dependent on the load attached to it. It will attempt to drive the output to the IOVDD level (or 0V in the case of a logic 0), but the amount of current it is able to source is limited, which will be dependent on the selected drive strength. Therefore the higher the current load is, the lower the voltage will be at the pin. At some point, the GPIO will be sourcing so much current, that the voltage is so low, it won't be recognised as a logic 1 by the input of a connected device. The purpose of the output specifications in Table 625 are to try and quantify how much lower the voltage can be expected to be, when drawing specified amounts of current from the pin.

The Output High Voltage (V_{OH}) is defined as the lowest voltage the output pin can be when driven to a logic 1 with a particular selected drive strength; e.g., 4mA being sourced by the pin whilst in 4mA drive strength mode. The Output Low Voltage is similar, but with a logic 0 being driven.

In addition to this, the sum of all the IO currents being sourced (i.e. when outputs are being driven high) from the IOVDD bank (essentially the GPIO and QSPI pins), must not exceed I_{IOVDD_MAX}. Similarly, the sum of all the IO currents being sunk (i.e. when the outputs are being driven low) must not exceed I_{IOVSS_MAX}.

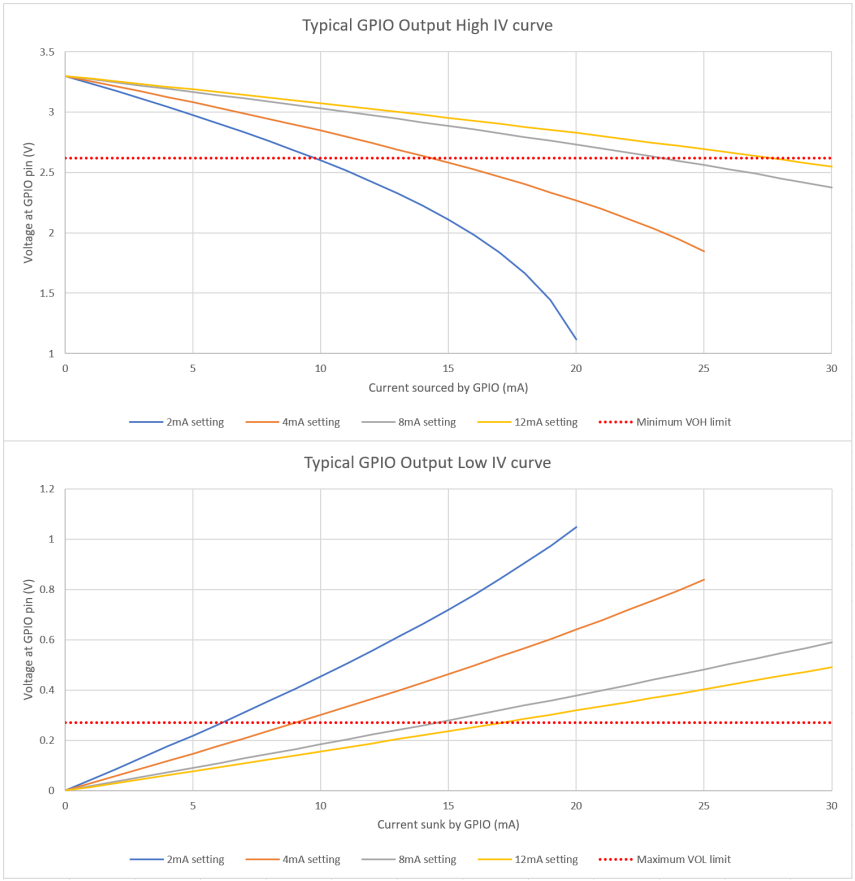

Figure 171. Typical Current vs Voltage curves of a GPIO output.

Figure 171 shows the effect on the output voltage as the current load on the pin increases. You can clearly see the effect of the different drive strengths; the higher the drive strength, the closer the output voltage is to IOVDD (or 0V) for a given current. The minimum V_{OH} and maximum V_{OL} limits are shown in red. You can see that at the specified current for each drive strength, the voltage is well within the allowed limits, meaning that this particular device could drive a lot more current and still be within V_{OH}/V_{OL} specification. This is a typical part at room temperature, there will be a spread of other devices which will have voltages much closer to this limit. Of course, if your application doesn't need such tightly controlled voltages, then you can source or sink more current from the GPIO than the selected drive strength setting, but experimentation will be required to determine if it indeed safe to do so in your application, as it will be outside the scope of this specification.

5.5.3.6. Pin IO Delays

These delays include PIO's input/output mapping logic, IO muxing, and the actual pad delays into a nominal load of 5 pF. Min/max is over the extremes of process variation, voltage (1.1 V +- 10%) and temperature (-40 C to 125 C).

These delays assume an IOVDD of 1.8 V, with `PADS_VSEL` set. At IOVDD = 3.3 V, the delay is significantly lower, and the range is smaller.

The flops themselves have a typical setup time of 10.6 ps and hold time of 2.2 ps. The IO delays between flops and pads must be taken into account.

For minimum and maximum output delays, from `CLK_SYS` arriving at any flop in PIO to the data being valid at a particular GPIO pad see Table 629.

Table 629. Pin minimum and maximum delays from flop to pad, in nanoseconds.

Pad output	Min delay (ns)	Max delay (ns)
GPIO0	2.27	7.10
GPIO1	2.31	7.07

Pad output	Min delay (ns)	Max delay (ns)
GPIO2	2.33	7.08
GPIO3	2.24	7.00
GPIO4	2.30	7.07
GPIO5	2.34	7.10
GPIO6	2.32	7.10
GPIO7	2.39	7.09
GPIO8	2.34	7.09
GPIO9	2.38	7.08
GPIO10	2.33	7.07
GPIO11	2.36	7.08
GPIO12	2.35	7.04
GPIO13	2.31	7.08
GPIO14	2.38	7.06
GPIO15	2.33	7.05
GPIO16	2.34	7.09
GPIO17	2.37	7.09
GPIO18	2.37	7.04
GPIO19	2.27	7.10
GPIO20	2.38	7.09
GPIO21	2.05	7.10
GPIO22	2.34	7.07
GPIO23	2.16	7.05
GPIO24	2.12	7.06
GPIO25	2.26	7.10
GPIO26	2.32	7.09
GPIO27	2.26	7.08
GPIO28	2.34	7.09
GPIO29	2.30	7.07

For minimum and maximum input delays, from pad input to the input synchroniser, see Table 630.

Table 630. Pin minimum and maximum delays from pad input to input synchroniser, in nanoseconds.

Pad output	Min delay (ns)	Max delay (ns)
GPIO1	1.89	5.22
GPIO2	1.84	5.25
GPIO3	1.83	5.24
GPIO4	1.90	5.17
GPIO5	1.90	5.14

Pad output	Min delay (ns)	Max delay (ns)
GPIO6	1.91	5.19
GPIO7	1.91	5.14
GPIO8	1.95	5.14
GPIO9	1.96	5.12
GPIO10	1.95	5.11
GPIO11	1.92	5.16
GPIO12	1.92	5.15
GPIO13	1.94	5.16
GPIO14	1.90	5.18
GPIO15	1.92	5.15
GPIO16	1.95	5.13
GPIO17	1.95	5.12
GPIO18	1.95	5.10
GPIO19	1.95	5.12
GPIO21	2.07	4.98
GPIO23	1.98	5.06
GPIO24	1.97	5.07
GPIO25	1.97	5.08
GPIO26	1.96	5.12
GPIO27	1.94	5.13
GPIO28	1.95	5.13
GPIO29	1.99	5.10

For minimum and maximum input delays over all corners, from pad input to state machine IN data flops (synchronisers bypassed) see Table 631.

Table 631. Pin minimum and maximum delays from pad input to state machine IN data flops (synchronisers bypassed), in nanoseconds.

Pad input	Min delay (ns)	Max delay (ns)
GPIO1	2.22	5.45
GPIO2	2.25	5.49
GPIO3	2.23	5.18
GPIO4	2.24	5.41
GPIO5	2.30	5.65
GPIO6	2.25	5.48
GPIO7	2.26	5.50
GPIO8	2.30	5.51
GPIO9	2.25	5.68
GPIO10	2.34	5.71
GPIO11	2.28	5.47

Pad input	Min delay (ns)	Max delay (ns)
GPIO12	2.29	5.40
GPIO13	2.25	5.47
GPIO14	2.24	5.41
GPIO15	2.23	5.47
GPIO16	2.30	5.42
GPIO17	2.28	5.44
GPIO18	2.28	5.34
GPIO19	2.30	5.50
GPIO21	2.16	5.79
GPIO23	2.33	5.53
GPIO24	2.28	5.60
GPIO25	2.29	5.53
GPIO26	2.28	5.38
GPIO27	2.27	5.39
GPIO28	2.24	5.28
GPIO29	2.33	5.47

5.5.3.6.1. Effects of IOVDD

All of the IO delays given above assume IOVDD = 1.8V. Increasing IOVDD to 3.3V reduces the pad delays quite significantly, and the pad delay is a large fraction of the delays reported above. See Table 632 for a summary of best and worst pad delays at 1.8V and 3.3V.

Table 632. Best and worst pad delays at 1.8V and 3.3V.

Path type	IOVDD	Min delay (ns)	Max delay (ns)
Output	1.8V	1.54	3.65
Output	3.3V	1.11	2.14
Input	1.8V	0.63	1.06
Input	3.3V	0.47	0.76

Changing IOVDD does not affect any logic in the core domain, so these differences can be added to the IO delay tables above to estimate the IO delay ranges at IOVDD = 3.3V (see Table 633).

Table 633. IO delay ranges at IOVDD = 3.3V.

Path group	IOVDD	Min delay (ns)	Max delay (ns)
Output	1.8V	2.12	7.10
Output	3.3V	1.69	5.59
Input to sync	1.8V	1.83	5.25
Input to sync	3.3V	1.67	4.95
Input to SM	1.8V	2.16	5.79
Input to SM	3.3V	2.00	5.49

5.6. Power Supplies

Table 634. Power Supply Specifications

Power Supply	Supplies	Min	Typ	Max	Units
IOVDD[a]	Digital IO	1.62	1.8 / 3.3	3.63	V
DVDD[b]	Digital core	1.05	1.1	1.16	V
VREG_VIN	Voltage regulator	1.62	1.8 / 3.3	3.63	V
USB_VDD	USB PHY	3.135	3.3	3.63	V
ADC_AVDD[c]	ADC	1.62	3.3	3.63	V

[a] If IOVDD <2.5V, GPIO VOLTAGE_SELECT registers should be adjusted accordingly. See Section 2.9 for details.

[b] Short term transients should be within +/-100mV. If using 200MHz for `clk_sys` as described in Section 2.15.3, set DVDD to 1.15V.

[c] ADC performance will be compromised at voltages below 2.97V

5.7. Power Consumption

5.7.1. Peripheral power consumption

Baseline readings are taken with only clock sources and essential peripherals (`BUSCTRL`, `BUSFAB`, `VREG`, Resets, ROM, SRAMs) active in the `WAKE_EN0`/`WAKE_EN1` registers. Clocks are set to default clock settings. Each peripheral is activated in turn by enabling all clock sources for the peripheral in the `WAKE_EN0`/`WAKE_EN1` registers. Current consumption is the increase in current when the peripheral clocks are enabled.

Table 635. Baseline power consumption

Peripheral	Typical DVDD Current Consumption (µA/MHz)
DMA	2.6
I2C0	3.9
I2C1	3.8
IO + Pads	23.6
PIO0	12.3
PIO1	12.5
PWM	5.0
RTC	1.1
SIO	1.9
SPI0	1.7
SPI1	1.8
Timer	1.2
UART0	3.5
UART1	3.7
Watchdog	1.0
XIP	37.6

Because of fixed external reference clocks of 48 MHz, as well as the variable system clock input, ADC and USBCTRL power consumption does not vary linearly with system clock (as it does for other peripherals which only have system and/or peripheral clock inputs). Absolute DVDD current consumption of the ADC and USBCTRL blocks at standard clocks (system clock of 125 MHz) is given below:

Table 636. Baseline power consumption for ADC and USBCTRL

Peripheral	Typical DVDD Current Consumption (µA/MHz)
ADC	0.1
USBCTRL	1.3

5.7.2. Power consumption for typical user cases

The following data shows the current consumption of various power supplies on 3 each of typical (`tt`), fast (`ff`) and slow (`ss`) corner RP2040 devices, with four different software use-cases.

NOTE

For power consumption of the Raspberry Pi Pico, please see the **Raspberry Pi Pico Datasheet**.

Firstly, 'Popcorn' (Media player demo) using the VGA, SD Card, and Audio board. This demo uses VGA video, I2S audio and 4-bit SD Card access, with a system clock frequency of 48MHz.

NOTE

For more details of the VGA board see the **Hardware design with RP2040** book.

Secondly, the BOOTSEL mode of RP2040. These measurements are made both with and without USB activity on the bus, using a Raspberry Pi 4 as a host.

The third use-case uses the `hello_dormant` binary which puts RP2040 into a low power state, `DORMANT` mode.

The final use-case uses the `hello_sleep` binary code which puts RP2040 into a low power state, `SLEEP` mode.

Table 637 has two columns per power supply, 'Typical Average Current' and 'Maximum Average Current'. The former is the current averaged over several seconds that you might expect a typical RP2040 to consume at room temperature and nominal voltage (e.g., DVDD=1.1V, IOVDD=3.3V, etc). The 'Maximum Average Current' is the maximum current consumption (again averaged over several seconds) you might expect to see on a worst-case RP2040 device, across the temperature extremes, and maximum voltage (e.g., DVDD=1.21V, etc).

NOTE

The 'Popcorn' consumption measurements depend on the video being displayed at the time. The 'Typical' values are obtained over several seconds of video, with varied colour and intensity. The 'Maximum' values are measured during periods of white video, when the required current is at its highest.

Table 637. Power Consumption

Software Use-case	Typical Average DVDD Current	Max. Average DVDD current	Typical Average IOVDD Current	Max. Average IOVDD current	Typical Average USB_VDD Current	Max. Average USB_VDD current	Units
Popcorn	10.9	16.6	24.8	35.5	-	-	mA
BOOTSEL mode - Active	9.4	14.7	1.2	4.3	1.4	2.0	mA
BOOTSEL mode - Idle	9.0	14.3	1.2	4.3	0.2	0.6	mA
Dormant	0.18	4.2	-	-	-	-	mA

Software Use-case	Typical Average DVDD Current	Max. Average DVDD current	Typical Average IOVDD Current	Max. Average IOVDD current	Typical Average USB_VDD Current	Max. Average USB_VDD current	Units
Sleep	0.39	4.5	-	-	-	-	mA

5.7.2.1. Power Consumption versus frequency

To give an indication of the relationship between the core frequency that RP2040 is operating at, and the current consumed by the DVDD supply, Figure 172 shows the measured results of a typical RP2040 device, continuously running FFT calculations on both cores, at various core clock frequencies. Figure 172 also shows the effects of case temperature, and DVDD voltage upon the current consumption.

Figure 172. DVDD Current vs Core Frequency of a typical RP2040 device, whilst running FFT calculations

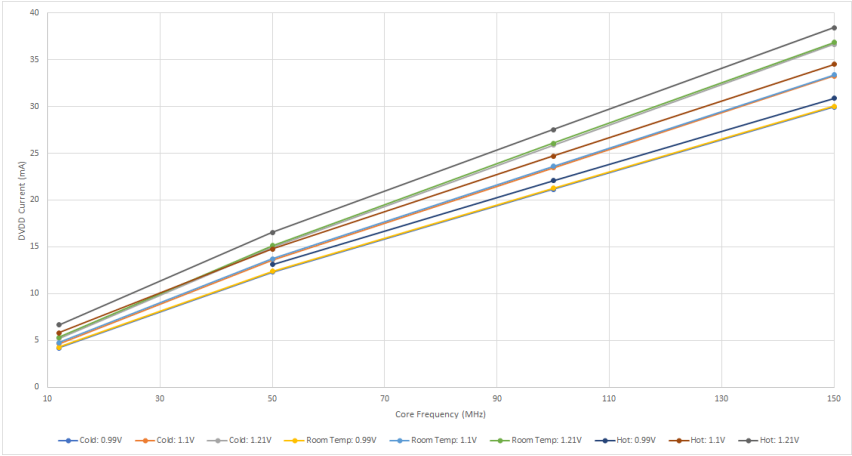

Appendix A: Register Field Types

Standard types

RW:

- Read/Write
- Read operation returns the register value
- Write operation updates the register value

RO:

- Read-only
- Read operation returns the register value
- Write operations are ignored

WO:

- Write-only
- Read operation returns 0
- Write operation updates the register value

Clear types

SC

- Self-Clearing
- Writing a 1 to a bit in an SC field will trigger an event, once the event is triggered the bit clears automatically
- Writing a 0 to a bit in an SC field does nothing

WC

- Write-Clear
- Writing a 1 to a bit in a WC field will write that bit to 0
- Writing a 0 to a bit in a WC field does nothing
- Read operation returns the register value

FIFO types

These fields are used for reading and writing data to and from FIFOs. Accompanying registers provide FIFO control and status. There is no fixed format for the control and status registers, as they are specific to each FIFO interface.

RWF

- Read/Write FIFO
- Reading this field returns data from a FIFO
  - When the read is complete, the data value is removed from the FIFO
  - If the FIFO is empty, a default value will be returned; the default value is specific to each FIFO interface
- Data written to this field is pushed to a FIFO, Behaviour when the FIFO is full is specific to each FIFO interface
- Read and write operations may access different FIFOs

RF

- Read FIFO
- Functions the same as RWF, but read-only

WF

- Write FIFO
- Functions the same as RWF, but write-only

Appendix B: Errata

Hardware blocks are listed alphabetically. Errata are listed numerically under the relevant block.

Bootrom

RP2040-E9

Reference	RP2040-E9
Summary	ROM bootloader cannot boot directly into XIP cache-as-SRAM
Description	The XIP cache can be used as an additional 16kB SRAM bank when XIP caching is disabled (Section 2.6.3.1). The UF2 bootloader supports RAM-only UF2 binaries, which it loads directly into memory, and enters via a watchdog reboot. A single UF2 binary can initialise both the XIP cache contents and main system memory, and the cache is disabled by the bootloader, so that cache contents be written. However, the watchdog reset re-enables the cache, so booting directly into the cache-as-SRAM alias causes an immediate bus fault. The cache contents are preserved, but can not be accessed immediately post-boot.
Workaround	Add code in main SRAM to re-disable XIP caching before accessing the cache-as-SRAM alias. When entering a RAM-only UF2 binary, the bootloader selects the lowest loaded address in either main SRAM or cache-as-SRAM as the entry point, preferring main SRAM if both are loaded. Additionally, if the `0x15···` segment is *written* immediately post-boot, a dummy read of the FLUSH register is required, so that no cache-as-SRAM writes take place during the tag memory flush triggered by the watchdog (see Section 2.6.3.2).
Affects	RP2040B0, RP2040B1, RP2040B2
Fixed by	Documentation

RP2040-E14

Reference	RP2040-E14
Summary	Sparse or mis-aligned flash-binary UF2 may not be written to flash correctly by the UF2 bootloader

Description	A RP2040 UF2 file consists of 256-byte pages of data, each marked to be written at a certain address by the UF2 bootloader. A flash-binary UF2 is one of these for which every 256-byte page is marked to be written at a 256-byte-aligned address in flash. When writing flash, an entire 4kB flash sector must be erased at a time before any pages within that sector can be (re-)written. The UF2 bootloader does not require the flash-binary UF2 to include data for all pages within a sector. In that case the whole sector will first be erased, any present pages will be written, and the rest of the 4kB sector will be left undefined. This mechanism works as expected when the *partially-filled* sector is at the end of the binary, which is of course commonplace, as a binary does not need to be a multiple of 4kB long. If however, the *partially-filled* sector occurs at the start of the binary (i.e. the binary is not aligned on a 4kB page) or if a *partially-filled* sector appears in the middle of the binary (i.e. the binary is sparse/non-contiguous), then the UF2 file may be written incorrectly. Note that the vast majority of UF2s generated by the SDK are indeed aligned on a 4kB boundary and contiguous, however it *is* possible for the SDK to produce a misaligned or non-contiguous binary by modifying the linker scripts, or putting extreme alignment requirements on static data. It is also possible that other languages or tools might produce binaries that are not 4kB-aligned or contiguous.
Workaround	The workaround is to include data for *all* the pages in any 4kB sector (other than the last) that contains data for *some* pages. This is handled for you automatically by the `elf2uf2` tool in the SDK version 1.3.1 onwards, which explicitly adds zero-filled pages to the appropriate *partially-filled* sectors.
Affects	RP2040B0, RP2040B1, RP2040B2
Fixed by	Documentation / Software

Clocks

RP2040-E7

Reference	RP2040-E7
Summary	ROSC and XOSC `COUNT` registers are unreliable
Description	The ROSC and XOSC `COUNT` registers are intended to be used in the configuration of components like PHYs and PLLs where microsecond scale delays are required and NOP loops are inadequate because the `clk_sys` frequency is variable. However due to a synchronisation issue the ROSC:COUNT and XOSC:COUNT registers are unreliable.
Workaround	Do not use ROSC:COUNT or XOSC:COUNT
Affects	RP2040B0, RP2040B1, RP2040B2
Fixed by	Not fixed, do not use. These registers are not used by the C SDK.

RP2040-E10

Reference	RP2040-E10

Summary	BADWRITE field in ROSC STATUS register is unreliable
Description	The BADWRITE field in the ROSC STATUS register was intended to report when invalid values had been written to other ROSC registers. However due to internal bugs the ROSC:STATUS.BADWRITE field is unreliable.
Workaround	Do not use ROSC:STATUS.BADWRITE field
Affects	RP2040B0, RP2040B1, RP2040B2
Fixed by	Not fixed, do not use. This field is not used by the C SDK.

DMA

RP2040-E12

Reference	RP2040-E12
Summary	Reading DMA WRITE_ADDR and READ_ADDR registers when an address-wrapping or non-incrementing transfer sequence is in progress gives wrong values
Description	The DMA's internal WRITE_ADDR and READ_ADDR registers are incremented every time the DMA issues a new address to its bus pipeline. If the processor reads these registers whilst a sequence of transfers is in progress, the value reported by the DMA is adjusted downward by the number of in-flight transfers (i.e. issued to the bus pipeline and not yet completed) times the individual transfer size in bytes. This logic was added to ensure that reading READ_ADDR and WRITE_ADDR reflects addresses where the read/write has *completed*, not merely where the address has been issued. This logic does not take into account that READ_ADDR and WRITE_ADDR do not increment linearly for some transfer modes, specifically, when CTRL.INCR_WRITE == 0, CTRL.INCR_READ == 0 or CTRL.RING_SIZE != 0.
Workaround	Instead of checking READ_ADDR or WRITE_ADDR to monitor the progress of a transfer sequence, check TRANS_COUNT. TRANS_COUNT has similar in-flight adjustment logic, but is not affected by this erratum because it always decrements linearly. The correct values of READ_ADDR and WRITE_ADDR can be calculated based on their initial values and TRANS_COUNT.
Affects	RP2040B0, RP2040B1, RP2040B2
Fixed by	Documentation

RP2040-E13

Reference	RP2040-E13
Summary	After aborting a channel, the ABORT status clears prematurely, and an interrupt may be asserted
Description	The DMA ABORT register is used to cancel an ongoing sequence of transfers, for example when a channel is stuck on an inactive peripheral DREQ. If, at the point the abort is triggered, the channel currently has any transfers in flight (i.e. the read cycle of the transfer has taken place, but the write cycle has not), the ABORT bit does not wait for these in-flight transfers to complete before clearing. When the in-flight transfers complete, because the ABORT bit was prematurely cleared, the DMA treats this as a normal completion. This sets the channel's interrupt status flag, assuming CTRL.IRQ_QUIET has not been set.

Workaround	Before aborting a channel, clear its interrupt enable. After aborting a channel, poll the `CTRL.BUSY` bit to wait for completion (not the `ABORT` bit), clear the spurious IRQ, and restore the interrupt enable.
Affects	RP2040B0, RP2040B1, RP2040B2
Fixed by	Software

GPIO / ADC

RP2040-E6

Reference	RP2040-E6
Summary	GPIO digital inputs not disabled for ADC pins by default
Description	GPIO26-29 are shared with ADC inputs AIN0-3. The GPIO digital input is enabled after RUN is released. If the pins are connected to an analogue signal to measure, there could be unexpected signal levels on these pads. This is unlikely to cause a problem as the digital inputs have hysteresis enabled by default.
Workaround	If analogue inputs are used, the digital input should be disabled as early as possible after startup. This is done in the RP2040B2 bootrom and early on in SDK platform setup code on RP2040B0 and RP2040B1. If user wishes to use digital inputs, they must be enabled.
Affects	RP2040B0, RP2040B1
Fixed by	RP2040B2 bootrom. Fixed on RP2040B0 and RP2040B1 in SDK. Custom user code should disable these inputs early on.

RP2040-E11

Reference	RP2040-E11
Summary	DNL error peaks in ADC
Description	The RP2040 ADC has a DNL that is mostly flat, and below 1 LSB. However at four values — 512, 1,536, 2,560, and 3,584 — the ADC's DNL error peaks above this value. The ENOB for the ADC has been reduced from 9-bits (simulated) to 8.7-bits (measured), see Section 4.9.3. The DNL errors will somewhat limit the performance of the ADC dependent on use case.
Workaround	None
Affects	RP2040B0, RP2040B1, RP2040B2
Fixed by	Not fixed.

USB

RP2040-E2

Reference	RP2040-E2
Summary	USB device endpoint abort is not cleared.

Description	The USB device controller (Section 4.1) has the ability to abort any pending transactions on an endpoint by setting that endpoint's bit in the EP_ABORT register. Due to a logic error, the USB device controller will reply with NAKs forever on all endpoints if a transaction is initiated for any endpoint with the EP_ABORT bit set.
Workaround	Do not use the EP_ABORT bits.
Affects	RP2040B0, RP2040B1
Fixed by	RP2040B2

RP2040-E3

Reference	RP2040-E3
Summary	USB host: interrupt endpoint buffer done flag can be set with incorrect buffer select.
Description	The USB host has two types of transactions: normal software initiated transfer, and interrupt transfers, where the host polls an interrupt endpoint after a specific amount of time. For example, polling a mouse every 1ms to check for movement. Interrupt transfer are single buffered, but the controller doesn't reset the buffer selector to zero. This means that if a software initiated transfer happened then the interrupt transfer can potentially raise the buffer done flag with `BUF1` selected instead of `BUF0`. The fix is to ignore the BUFF_CPU_SHOULD_HANDLE register for interrupt endpoints.
Workaround	
Affects	RP2040B0, RP2040B1, RP2040B2
Fixed by	Software

RP2040-E4

Reference	RP2040-E4
Summary	USB host writes to upper half of buffer status in single buffered mode.
Description	The USB host maintains a buffer selector which switches between `BUF0` and `BUF1`. This should only be toggled in double buffered mode but is toggled in single buffered mode too. For a transaction lasting multiple packets (i.e. length more than 8 bytes in low speed mode, and length more than 64 bytes in full speed mode), the buffer status can be written back to the `BUF1` half of the status register when the buffer select is incorrectly set to `BUF1`. Note this does not affect reading new buffer information from the buffer control register, as the controller ignores the buffer selector in single buffered mode when reading the buffer control register.
Workaround	Shift endpoint control register to the right by 16 bits if the buffer selector is `BUF1`. You can use BUFF_CPU_SHOULD_HANDLE find the value of the buffer selector when the buffer was marked as done.
Affects	RP2040B0, RP2040B1, RP2040B2
Fixed by	Software

RP2040-E5

Reference	RP2040-E5
Summary	USB device fails to exit `RESET` state on busy USB bus.

Description	The USB bus `RESET` state is triggered by the host sending `SE0` for 10ms to the device. The USB device controller requires 800µs of idle (`J-state`) after a bus reset before moving to the `CONNECTED` state. Without this idle time, the USB device does not connect and will not receive any packets from the host, and so does not enumerate. A device reset happens just after the device is plugged in. Although a host will wait before talking to a newly-reset device, other devices attached to the same USB hub may also be communicating with the host. USB 2.0 and USB 3.0 hubs have one or more transaction translators, which facilitate low speed and full speed transactions on a higher speed bus. It depends on the hub design, but a transaction translator is usually shared between a few ports. As the RP2040 USB device is full speed, its traffic when connected to a hub will come via a transaction translator. This means that if you have another device plugged in next to an RP2040, the RP2040 is likely to see some messages from the host addressed to the other device. If the device is not very active, for example, a mouse that is polled every 8ms, this is not a problem. However some devices, such as a USB serial port, are polled every 30-50µs. In this case the bus is very active, and will cause the RP2040 to never exit `RESET` state and not connect. There is a hardware fix in RP2040B2 which avoids the need for 800µs of IDLE time after `RESET` state. There is a software workaround for this issue (see workaround section). A user can also work around this by closing the USB serial port or any other offending devices while connecting their RP2040 and then re-opening their USB serial port. On a larger hub, the problem may be fixed by moving the RP2040 far away (onto a different transaction translator) from the offending device. For example, connecting the RP2040 to port 1 of a 7 port hub, and connecting the USB serial console to port 7, may solve the issue. Connecting the RP2040 to a separate USB hub to any busy devices will also fix the problem.
Workaround	Use software to force USB device controller to see idle USB bus for 800µs to move the device from the `RESET` state to the `CONNECTED` state. This fix uses internal debug logic that is connected to GPIO15 for a short amount of time (~800µs). This forces the controller to see DP as a logical 1 (and DM as logical 0) to make the USB Device controller believe there is a `J-state` on the USB bus. GPIO15 does not need to be tied in any particular way for this fix to work. Instead, we can force the input path in software using the Section 2.19 input override feature. See https://github.com/raspberrypi/pico-sdk/blob/master/src/rp2_common/pico_fix/rp2040_usb_device_enumeration/rp2040_usb_device_enumeration.c. **NOTE** The workaround takes control of GPIO 15 during a device reset, so you need to be sure that you are not using GPIO 15 for anything else during a device reset before using the workaround. A device reset happens after the first connection, but may also happen at other times under the host's control. Using the workaround with TinyUSB and the SDK is easy, as the above source file is included by the library `pico_fix_rp2040_usb_device_enumeration` (which is automatically added as a dependency of TinyUSB in device mode). The fix itself is still off by default though, since the fix's use of GPIO 15 may conflict with the application's own use of GPIO 15. You can enable it by setting either `PICO_RP2040_USB_DEVICE_ENUMERATION_FIX=1` as part of your compiler definitions in your `CMakeLists.txt`, or `TUD_OPT_RP2040_USB_DEVICE_ENUMERATION_FIX=1` in your `tusb_config.h`. It is safe (and inexpensive) to enable the software workaround even when using versions of RP2040 which include the fix in hardware.
Affects	RP2040B0, RP2040B1

Fixed by	RP2040B2. Software workaround on RP2040B0, RP2040B1. The workaround isn't present in the USB mass storage code in the bootrom. The software workaround requires use of GPIO15 during USB bus reset.

RP2040-E15

Reference	RP2040-E15
Summary	USB Device controller will hang if certain bus errors occur during an IN transfer.
Description	The USB Device controller enters an unrecoverable state if the following critical sequence of events occurs: • RP2040 is connected to a VL805 xHCI controller and is operating in full-speed mode • The integrated hub detects an impending line collision between downstream port Transaction Translator traffic and broadcast upstream traffic (Start-of-Frame token) • The integrated hub forces a bitstuffing error during the PID or CRC portions of the downstream in-progress packet or token. This sequence is known to occur with the downstream-facing ports on a Raspberry Pi 4 or a Raspberry Pi 400 and Bulk IN endpoints with data buffer sizes of more than 50 bytes. In this case, the integrated USB2.0 hub incorrectly determines the remaining full-speed frame time in anticipation of a SOF packet from the host, and erroneously transmits an IN token which results in the later ACK reply being corrupted and replaced by the propagated SOF packet. This type of data corruption is not properly handled by the device state machine, and the device controller must be reset. This sequence has not been seen to occur on commodity USB2.0 hubs, nor on Root Ports that are not provided by a VL805 xHCI controller.
Workarounds	1) VL805 firmware version 0138c1 An updated firmware has been pushed to the `DEFAULT` channel in the `raspberrypi-bootloader` Apt package on Pi 4 products. This corrects the erroneous hub time calculation. This firmware update is not automatically applied, users must run `sudo rpi-eeprom-update -a` on the Pi 4 and follow on-screen instructions. 2) Linux Kernel xHCI driver patch A kernel update is available for the Raspberry Pi 4-series products that, for VL805 firmware versions earlier than 0138c1, avoids enqueueing single Transfer Descriptors to the controller for affected endpoints during the last microframe of a full-speed frame. This update is available in the `raspberrypi-kernel` Apt package. 2) SDK v1.5.0 / TinyUSB 0.15.0 TinyUSB starting at version 0.15.0 adds a workaround for this erratum, and this version is picked up in the v1.5.0 release of the SDK. The dcd_rp2040 driver will avoid enabling bulk IN buffers during the last 200µs of a full-speed frame. This reduces available Bulk IN bandwidth by approximately 20%, and selectively enables the Start-of-Frame interrupt. The TinyUSB workaround is not necessary for implementations that will never be connected to a vulnerable VL805 port, for example in a circuit design where RP2040 is directly connected to an on-board hub. The workaround can be disabled by defining `TUD_OPT_RP2040_USB_DEVICE_UFRAME_FIX=0` in your `tusb_config.h`.

Affects	RP2040B0, RP2040B1, RP2040B2
Fixed by	Documentation, Software

RP2040-E16

Reference	RP2040-E16
Summary	Inadequate synchronisation of USB status signals
Description	Within the USB peripheral, certain Host and Device controller events cross from `clk_usb` to `clk_sys`. Many of these signals do not have appropriate synchronisation methods to ensure that they are correctly registered when `clk_sys` is equal to or slower than `clk_usb`. The following signals lack appropriate synchronisation methods: `SIE_STATUS`: * `TRANS_COMPLETE` * `SETUP_REC` * `STALL_REC` * `NAK_REC` * `RX_SHORT_PACKET` * `ACK_REQ` * `DATA_SEQ_ERROR` * `RX_OVERFLOW` `INTR`: * `HOST_SOF` * `ERROR_CRC` * `ERROR_BIT_STUFF` * `ERROR_RX_OVERFLOW` * `ERROR_RX_TIMEOUT` * `ERROR_DATA_SEQ` The bootrom's USB bootloader chains `clk_sys` from `clk_usb`, therefore the two clock frequencies are identical and have a fixed phase relationship. In this condition and at extremes of PVT, lab testing has observed that these events may be lost, which results in unreliable USB bootloader behaviour.
Workaround	Run `clk_sys` faster than `clk_usb` by at least 10% when the peripheral is in use. Signalling of quasi-static bus states such as reset, suspend, and resume are not affected by this erratum, so `clk_sys` can be lower in these cases.
Affects	RP2040B0, RP2040B1, RP2040B2
Fixed by	Documentation, software. Not fixed in the RP2040 bootrom.

Watchdog

RP2040-E1

Reference	RP2040-E1
Summary	Watchdog count is decremented twice per tick.
Description	The watchdog (Section 4.7) has a 24-bit counter, that decrements every tick, starting from a user defined value set in LOAD register. There is a logic error which means the counter is decremented twice per tick, instead of once per tick. In a recommended setup where the tick occurs at 1µs intervals, this halves the maximum time between resetting the watchdog counter from ~16.7 seconds to ~8.3 seconds.
Workaround	Use double the desired value in LOAD.
Affects	RP2040B0, RP2040B1, RP2040B2
Fixed by	Documentation, Software

XIP Flash

RP2040-E8

Reference	RP2040-E8
Summary	Race condition when aborting an XIP DMA stream and immediately starting a new stream
Description	The XIP DMA streaming hardware allows a linear sequences of flash reads to proceed in the background, and be read by the DMA, without subjecting the DMA to the bus stalls caused by a normal XIP-window access. A stream is begun by writing to the STREAM_ADDR register, followed by STREAM_CTR, and can be *aborted* midway by writing 0 to STREAM_CTR. When a stream is aborted in this way, there is sufficient time for software to load a new address and begin a new stream whilst the final SPI/QSPI access of the aborted stream is still in progress. This causes the newly-loaded stream address to be incremented once before the first data transfer of the new stream sequence, so the entire stream takes place at a 4-byte offset.
Workaround	After clearing STREAM_CTR, immediately perform one dummy read from the uncached XIP window, e.g. `(void)*(io_ro_32*)XIP_NOCACHE_NOALLOC_BASE;`. If an XIP stream transfer is still in progress, this dummy read will stall until that transfer completes. It is then safe to begin a new stream by writing to STREAM_ADDR followed by STREAM_CTR.
Affects	RP2040B0, RP2040B1, RP2040B2
Fixed by	Documentation, Software

Appendix C: Availability

Raspberry Pi understands the value to customers of long term availability of product and therefore aims to continue supply for as long as practically possible. We expect RP2040 to remain in production until at least January 2041.

Support

For support see the Pico section of the Raspberry Pi website, and post questions on the Raspberry Pi forum.

Ordering code

RP2040 can be ordered in bulk from Raspberry Pi Direct.

Table 638. Part Number

Model	Order Code	Minimal Order Quantity	RRP	Equivalent price per chip
7" reel of 500 × RP2040 chips	SC0914(7)	1+ pcs / Bulk	US$400.00	US$0.80
13" reel of 3,400 × RP2040 chips	SC0914(13)	1+ pcs / Bulk	US$2,380.00	US$0.70

NOTE

RRP was correct at time of publication and excludes taxes.

Documentation Release History

20 February 2025

- Updated register field types descriptions to use the improved RP2350 wording.
- Add information about running Dual Cortex M0+ processor cores at 200MHz.

15 October 2024

- Corrected minor typos and formatting issues.
- Switched back to separate release histories per PDF.

02 May 2024

- Corrected minor typos and formatting issues.

02 February 2024

- Corrected minor typos and formatting issues.
- Updated ROSC register information.
- Updated to include the new recommended part number for crystals used with RP2040.

14 June 2023

- Corrected minor typos and formatting issues.

03 March 2023

- Corrected minor typos and formatting issues.
- Added errata E15.
- Added package marking specifications.
- Added RP2040 baseline power consumption figures.

01 December 2022

- Corrected minor typos and formatting issues.
- Added RP2040 availability information.
- Added RP2040 storage conditions and thermal characteristics.

- Replaced SDK library documentation with links to the online version.

30 June 2022

- Corrected minor typos and formatting issues.

17 June 2022

- Corrected minor typos and formatting issues.
- RP2040 now qualified to -40°C, minimum operating temperature changed from -20°C to -40°C.
- Increased PLL min VCO from 400MHz to 750MHz for improved stability across operating conditions.
- Added errata E12, E13 and E14.

04 November 2021

- Corrected minor typos and formatting issues.
- Improved documentation on USB double buffering.
- Updated links to documentation.

03 November 2021

- Corrected minor typos and formatting issues.
- Fixed some register access types and descriptions.
- Added core 1 launch sequence info.
- Described SDK "panic" handling.
- Updated `picotool` documentation.

30 September 2021

- Corrected minor typos and formatting issues.
- Added information about B2 release.
- Updated errata for B2 release.

23 June 2021

- Corrected minor typos and formatting issues.
- Updated information on ADC.
- Added errata E11.

07 June 2021

- Corrected minor typos and formatting issues.
- Added SDK release history.

13 April 2021

- Corrected minor typos and formatting issues.
- Clarified that all source code in the documentation is under the 3-Clause BSD license.

07 April 2021

- Corrected minor typos and formatting issues.
- Added errata E10.

05 March 2021

- Corrected minor typos and formatting issues.
- Improved pinout diagram.

23 February 2021

- Corrected minor typos and formatting issues.
- Changed font.
- Added additional documentation on sink/source limits for RP2040.
- Made major improvements to SWD documentation.
- Added errata E7, E8 and E9.

01 February 2021

- Corrected minor typos and formatting issues.
- Made small improvements to PIO documentation.
- Added missing `TIMER2` and `TIMER3` registers to DMA.

26 January 2021

- Corrected minor typos and formatting issues.
- Added extra information about using DMA with ADC.
- Clarified M0+ and SIO CPUID registers.
- Added more discussion of Timers.

- Renamed books and optimised size of output PDFs.

21 January 2021

- Initial release.



Raspberry Pi is a trademark of Raspberry Pi Ltd