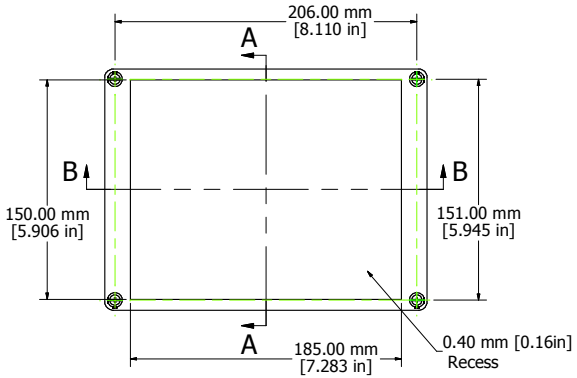

ASSEMBLY - TOP

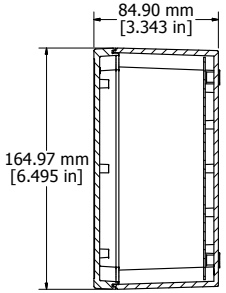

SECTION A-A

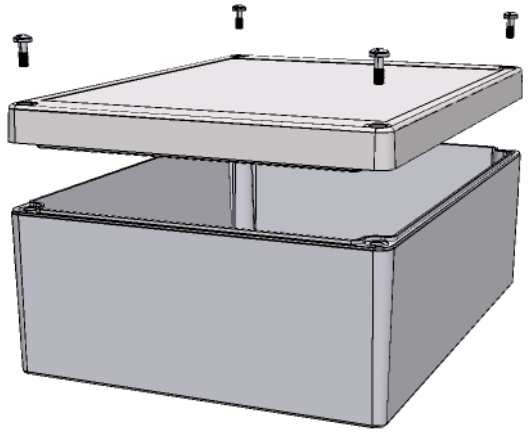

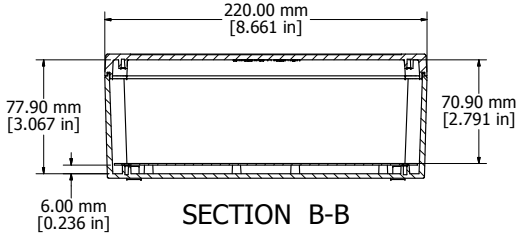

SECTION B-B

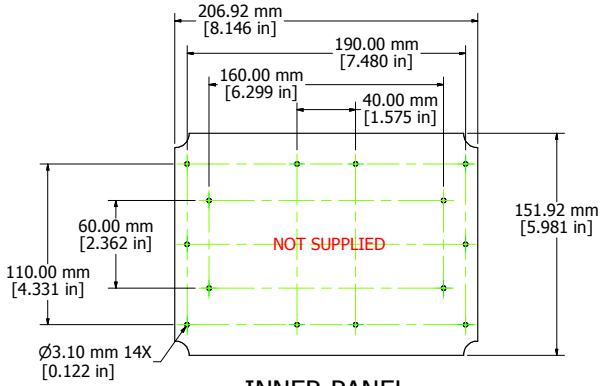

INNER PANEL

Enclosures can be Factory Modified (Milling, Drilling, Printing etc.)
Contact Factory mjm@hammondmfg.com for quotes
Solid models of this enclosure available in STEP or IGES.

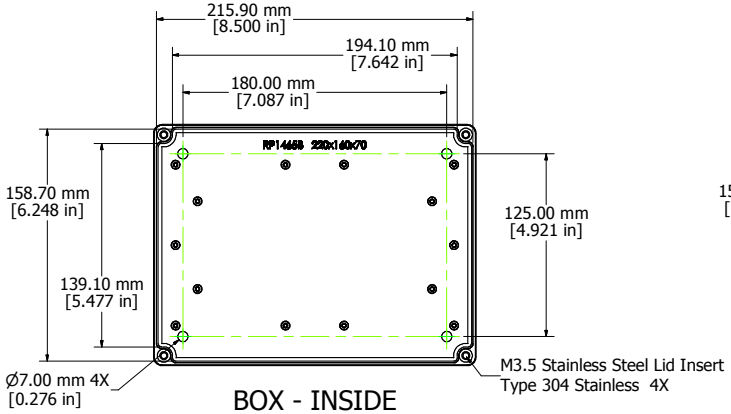

BOX - INSIDE

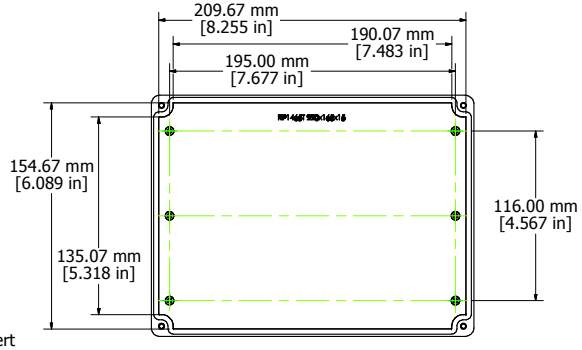

LID - INSIDE

RP1465
Material: ABS (UL94-HB), Light Gray Color
Lid Screws: M3.5 x 10, 304 Stainless
Gasket: EDPM Cord.
Circuit Board Screws, 4 Supplied (M3 self tap)
Suggested Lid Screw Torque: 30ozf-in (21cN-m)

HAMMOND MANUFACTURING™

RP1465

www.hammondmfg.com