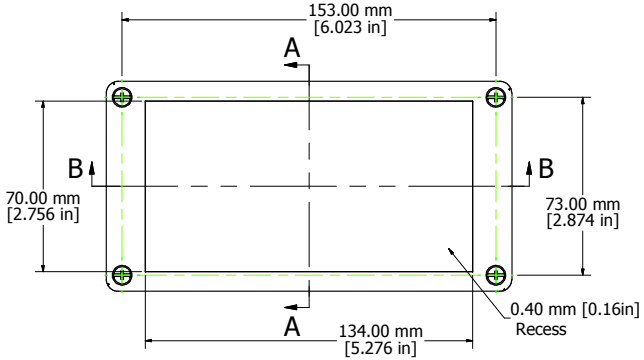

ASSEMBLY - TOP

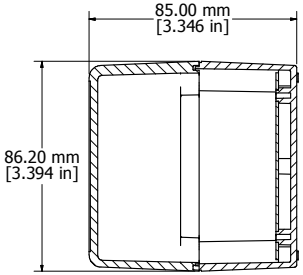

SECTION A-A

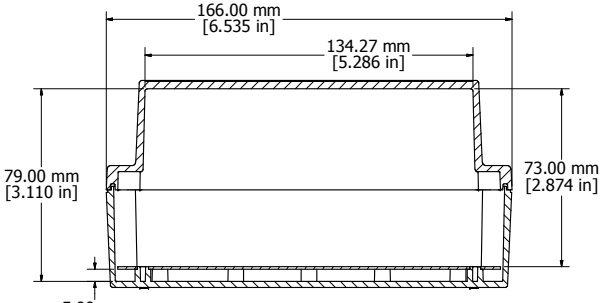

SECTION B-B

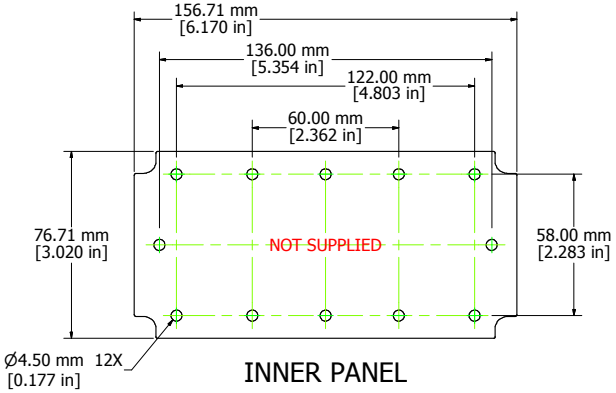

INNER PANEL

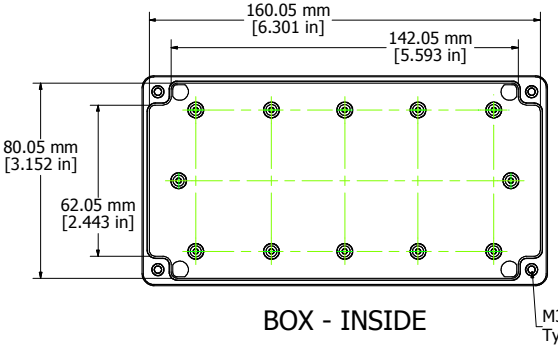

BOX - INSIDE

M3.5 Stainless Steel Lid Insert
Type 304 Stainless 4X

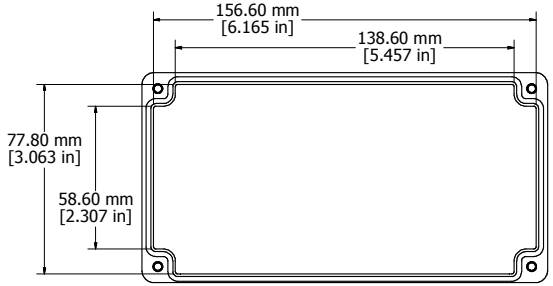

LID - INSIDE

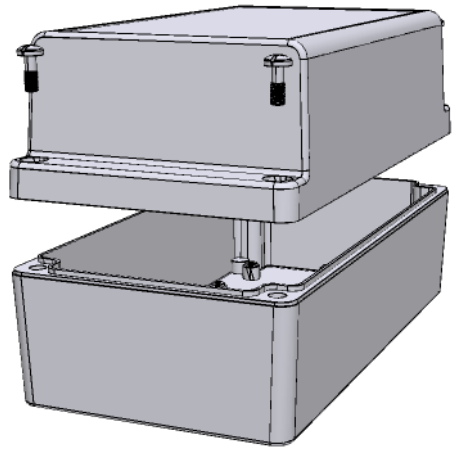

Enclosures can be Factory Modified (Milling, Drilling, Printing etc.)
Contact Factory mjm@hammondmfg.com for quotes
Solid models of this enclosure available in STEP or IGES.

RP1180
MATERIAL: Polycarbonate (UL94-HB), Off-White
LID SCREWS: M3.5 x 10, 304 Stainless
GASKET: EDPM Cord.
Circuit Board Screws, 4 Supplied (M3 self tap)
Suggested Lid Screw Torque: 30 ozf-in (21 cN-m)

HAMMOND MANUFACTURING™

RP1180

www.hammondmfg.com