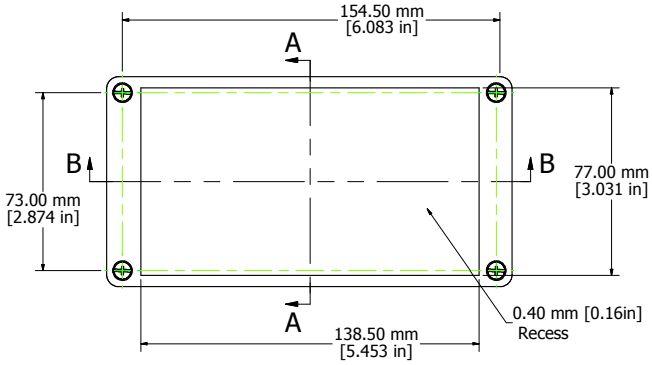

ASSEMBLY - TOP

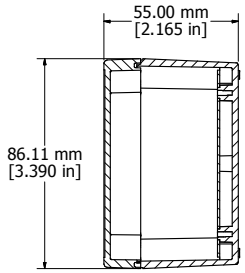

SECTION A-A

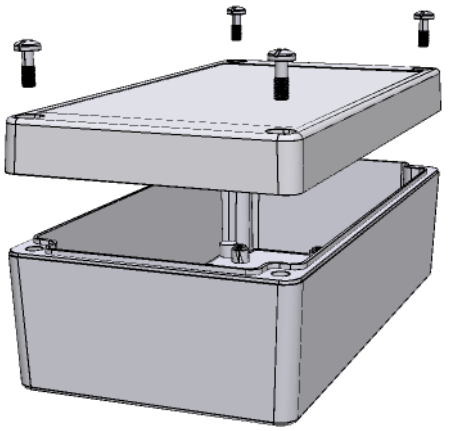

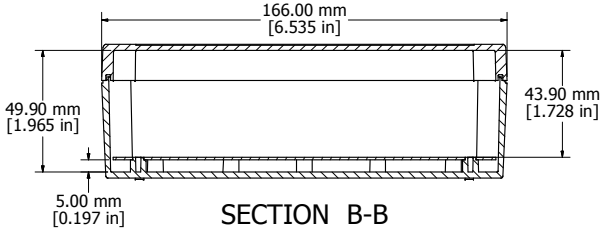

SECTION B-B

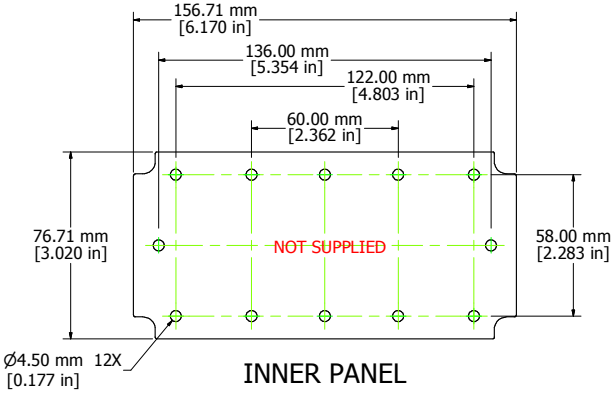

INNER PANEL

Enclosures can be Factory Modified (Milling, Drilling, Printing etc.)
Contact Factory mjm@hammondmfg.com for quotes
Solid models of this enclosure available in STEP or IGES.

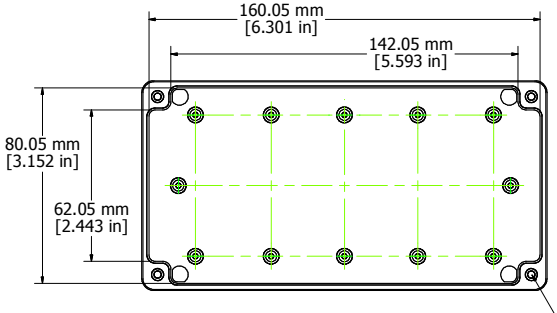

BOX - INSIDE

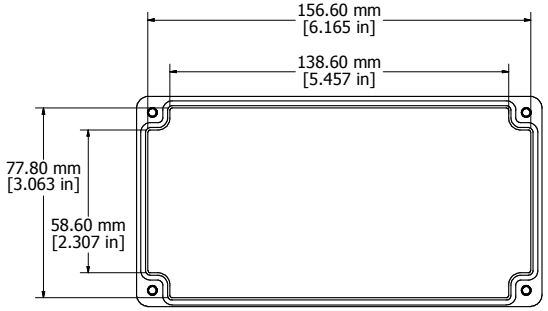

LID - INSIDE

RP1175
Material: ABS (UL94-HB), Light Gray Color
Lid Screws: M3.5 x 10, 304 Stainless
Gasket: EDPM Cord.
Circuit Board Screws, 4 Supplied (M3 self tap)
Suggested Lid Screw Torque: 30 ozf-in (21 cN-m)

HAMMOND MANUFACTURING™

RP1175

www.hammondmfg.com

Mouser Electronics

Authorized Distributor

Click to View Pricing, Inventory, Delivery & Lifecycle Information:

Hammond:
RP1175C