

SECTION A-A

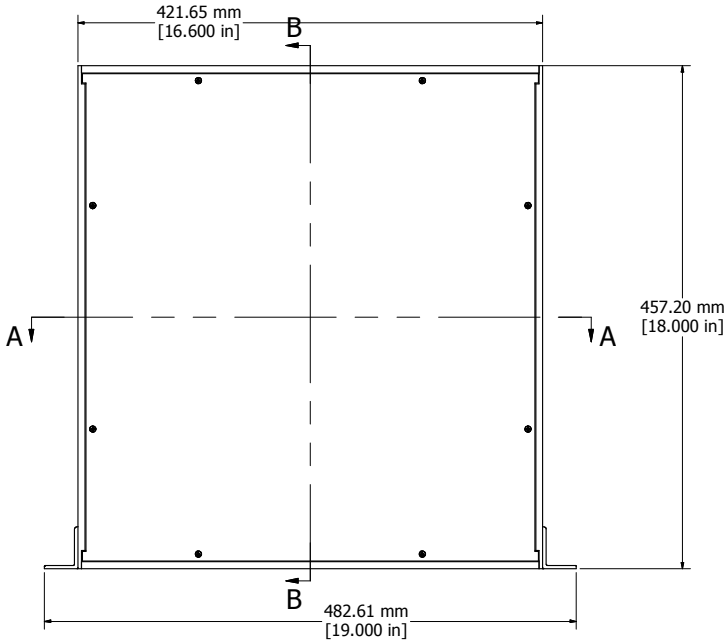

ASSEMBLY - VIEW FROM TOP

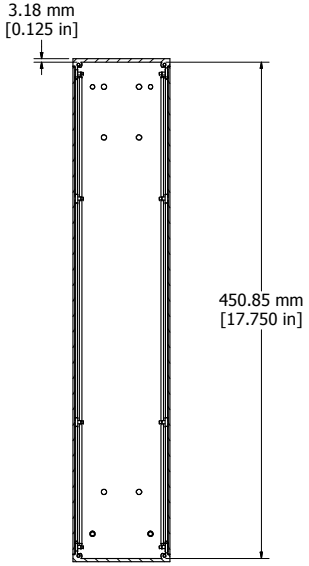

SECTION B-B

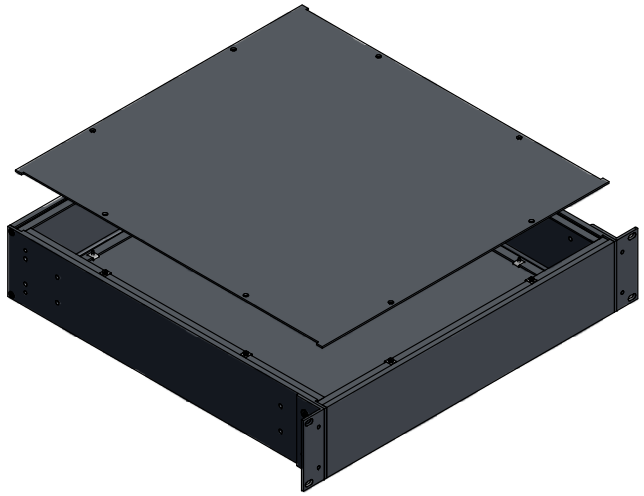

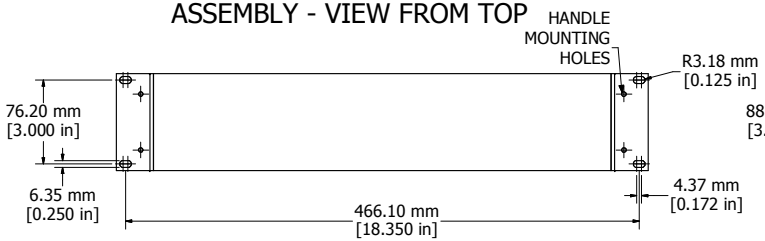

ASSEMBLY - VIEW FROM FRONT

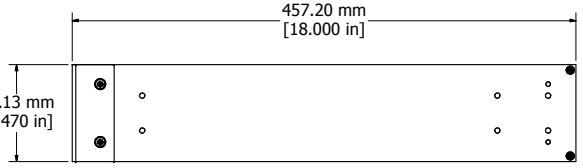

ASSEMBLY - VIEW FROM SIDE

RM2U1918SBK	
Extruded Aluminum Frame - Type 6063	
2 Panels - .064" Aluminum (5052-H32) Powder Coat	
2 Mounting Brackets - .125" Aluminum	
16 Screws - Flat Head 4-40 x 3/8"	
8 Screws - Counter Sunk Head 6-32 x 3/8"	
4 Screws - Counter Sunk Head 10-32 x 3/8"	
16 Nuts - #4 Speed Nuts	
Four Self Adhesive Rubber Feet - 1421T3	
ACCESSORIES	
PULL HANDLES	1427E1BK
REAR BRACKET KIT	RM2U18BRKT

Enclosures can be Factory Modified (Milling, Drilling, Printing etc.)
Contact Factory mjm@hammondmfg.com for quotes
Solid models of this enclosure available in STEP or IGES.

HAMMOND MANUFACTURING™

RM2U1918SBK

www.hammondmfg.com

Mouser Electronics

Authorized Distributor

Click to View Pricing, Inventory, Delivery & Lifecycle Information:

Hammond:

RM2U1918VBK RM2U1918SBK