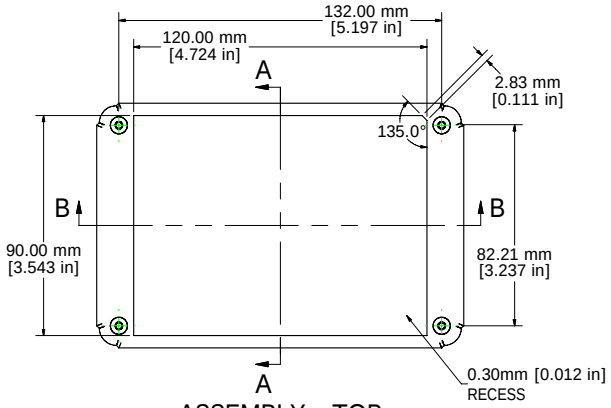

ASSEMBLY - TOP

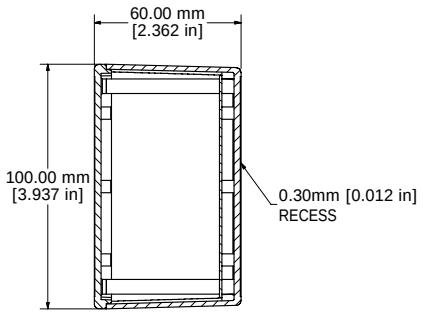

SECTION A-A

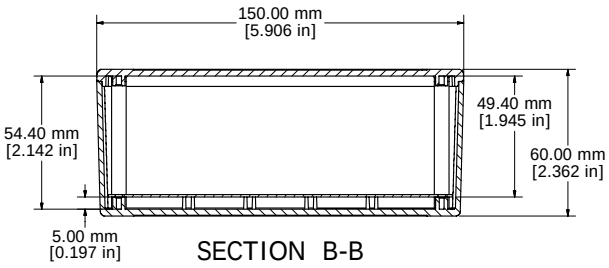

SECTION B-B

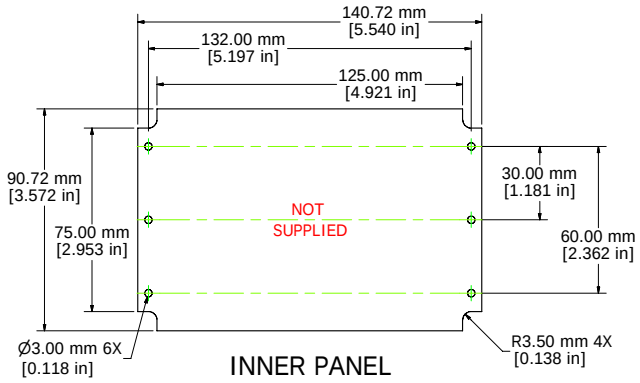

INNER PANEL

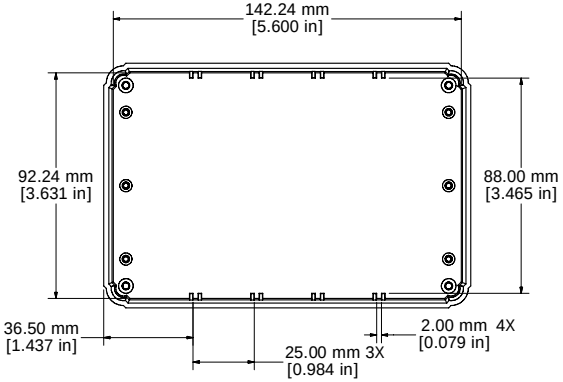

BOX - INSIDE

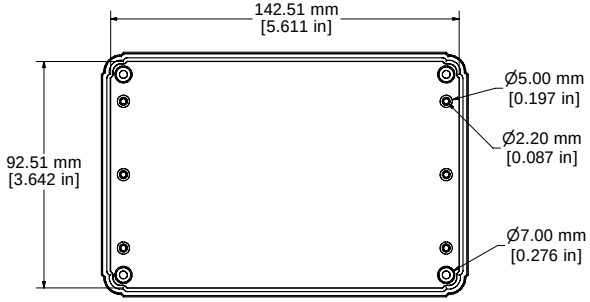

LID - INSIDE

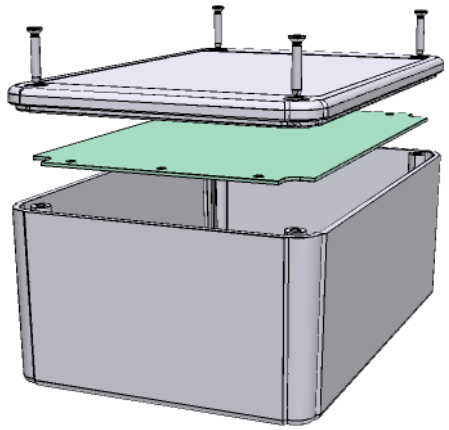

Enclosures can be Factory Modified (Milling, Drilling, Printing etc.)
Contact Factory mjm@hammondmfg.com for quotes
Solid models of this enclosure available in STEP or IGES.

RL6435
Material: ABS (UL94-HB), Light Gray color
Lid Screws: M2.6 x 18
Circuit Board Screws, 4 Supplied (M2.6 self tap)
Suggested Lid Screw Torque: 30 ozf-in (21 cN-m)

HAMMOND MANUFACTURING™

RL6435

www.hammondmfg.com