

SECTION A-A

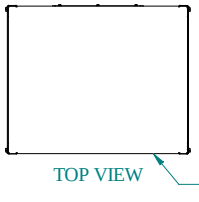



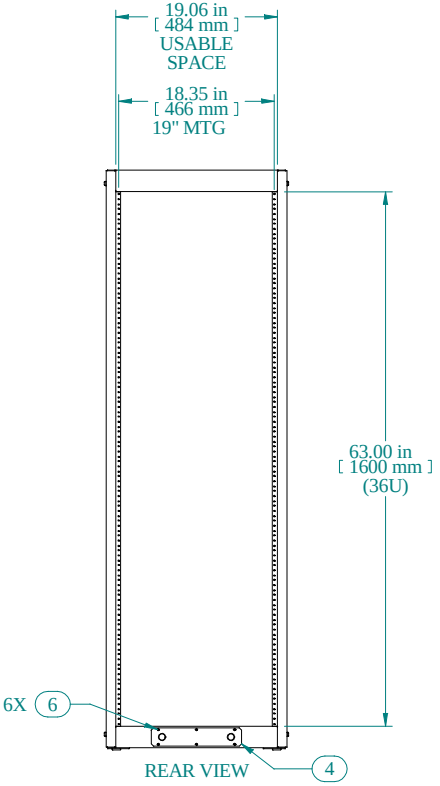

REAR VIEW

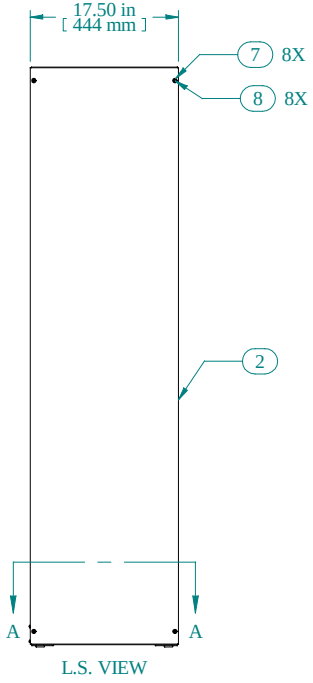

L.S. VIEW

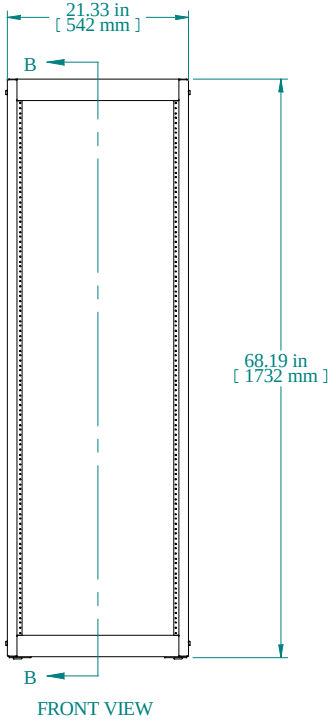

FRONT VIEW

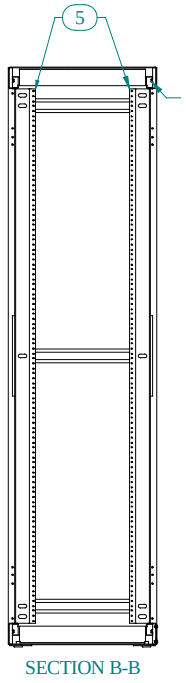

SECTION B-B

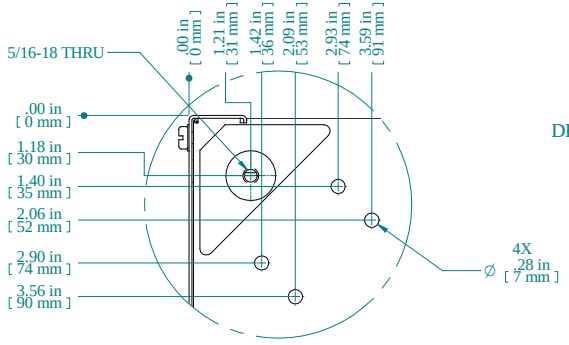

DETAIL C

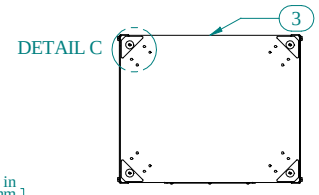

BOTTOM VIEW

Item Number	Title	Quantity
1	REFK - TOP PANEL	1
2	REFK - SIDE PANEL	2
3	REFK - BOTTOM PANEL	1
4	REFK - GLAND PLATE	1
5	COMBINATION RAILS TAPPED (PAIR)	2
6	SCREW 6-32X1/4 SELF TAPPING	6
7	FLAT NYLON WASHER 1/4" I.D.	8
8	SCREW 1/4-20 X 1/2	8
9	NUT 1/4-20 KEP	8

PART NUMBERS	
REFK1906317BK1	PAINTED BLACK TEXTURED
REFK1906317CG1	PAINTED CONT. GRAY TEXTURED
REFK1906317LG1	PAINTED RAL7035 TEXTURED

NOTES

Shipped knockdown for handling ease & protection.

Data subject to change without notice. Isometric drawing not to scale.

HAMMOND MANUFACTURING™

www.hammondmfg.com

PART NO. REFK1906317

Mouser Electronics

Authorized Distributor

Click to View Pricing, Inventory, Delivery & Lifecycle Information:

Hammond:

REFK1906317CG1 REFK1906317BK1