Drawers & Slides - Panel Mount (Two Pair of Panel Rails)





Assembly Instructions

Rail Mounted Storage Drawer

- Standard 19" rack mount
- Plastic front pull handle
- Inside of drawer width is 16.375" wide
- Complete drawer with slides, hardware, lock & two keys
- Drawer shroud, 14 Ga. steel construction
- Weight load tested (RDRW1900322BK1) to 60 pounds (no rear support), (RDRW2400822BK1) to 120 pounds (with rear support).
- Available in 3 depths
- Rear support brackets included for all depths or can be supported from rear accessory rail
- Drawer interior smooth white powder paint for high visability
- Front face finished in tough textured powder paint
- **MOUNTS ON TWO**

PAIR OF PANEL RAILS (FRONT & BACK)

12" DEEP DRAWER

Part Number	Front Face Color		Drawing File Size		.zip File Size	Drawer Height	Slide Travel
RDRW1900312BK1 **RDRW1900312CG1**	Black Grey/Beige		21K		31K	3.50"	12"
RDRW1900512BK1 **RDRW1900512CG1**	Black Grey/Beige		22K		32K	5.25"	12"
RDRW1900712BK1 **RDRW1900712CG1**	Black Grey/Beige		22K		32K	7.00"	12"
RDRW1900812BK1 **RDRW1900812CG1**	Black Grey/Beige		22K		32K	8.75"	12"
RDRW1901212BK1 **RDRW1901212CG1**	Black Grey/Beige		22K		32K	12.25"	12"

16" DEEP DRAWER

Part Number	Front Face Color		Drawing File Size		.zip File Size	Drawer Height	Slide Travel
RDRW1900316BK1 **RDRW1900316CG1**	Black Grey/Beige		21K		31K	3.50"	16"
RDRW1900516BK1 **RDRW1900516CG1**	Black Grey/Beige		22K		32K	5.25"	16"
RDRW1900716BK1 **RDRW1900716CG1**	Black Grey/Beige		22K		32K	7.00"	16"
RDRW1900816BK1 **RDRW1900816CG1**	Black Grey/Beige		20K		32K	8.75"	16"
RDRW1901216BK1 **RDRW1901216CG1**	Black Grey/Beige		22K		32K	12.25"	16"

22" DEEP DRAWER

Part Number	Front Face Color		Drawing File Size		.zip File Size	Drawer Height	Slide Travel
RDRW1900322BK1 **RDRW1900322CG1**	Black Grey/Beige		22K		32K	3.50"	22"
RDRW1900522BK1 **RDRW1900522CG1**	Black Grey/Beige		22K		32K	5.25"	22"
RDRW1900722BK1 **RDRW1900722CG1**	Black Grey/Beige		22K		32K	7.00"	22"
RDRW1900822BK1 **RDRW1900822CG1**	Black Grey/Beige		22K		32K	8.75"	22"
RDRW1901222BK1 **RDRW1901222CG1**	Black Grey/Beige		22K		32K	12.25"	22"

Note: Weight load tested (RDRW1900322BK1) to 60 pounds (no rear support), (RDRW2400822BK1) to 120 pounds (with rear support).

PART No. RDRW1901222

DRAWER EXTENDS 22" ON INCLUDED SLIDES.
(SLIDES NOT SHOWN FOR CLARITY)

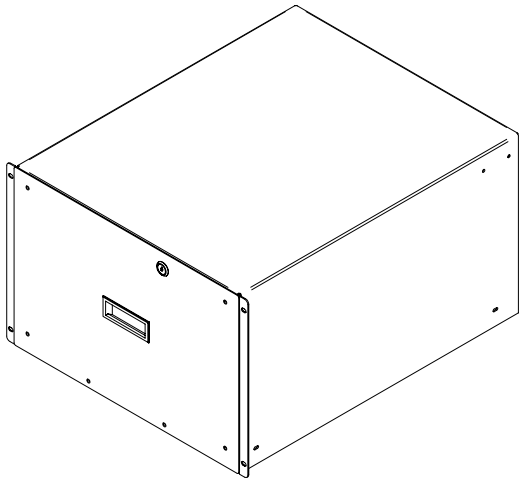

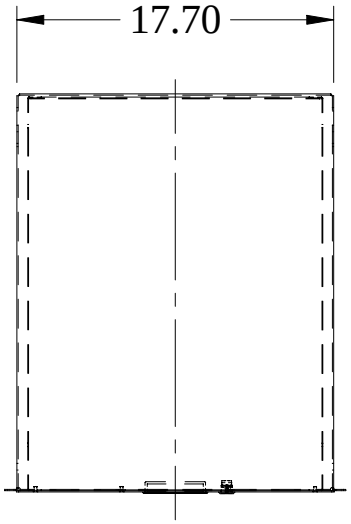

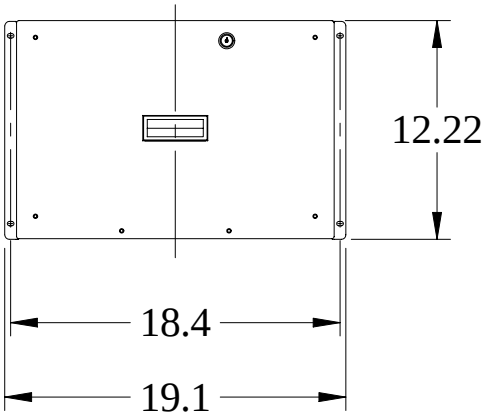

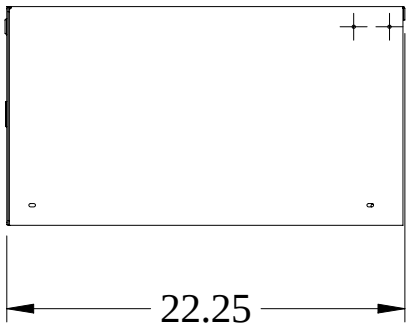

KEYBOARD DRAWER ACCESS DOOR

- Standard 19" rack mount
- Restricts access to keyboard drawers
- Mounts to front panel rails in front of keyboard drawer (RAKS & RSKS series - see previous page)
- Includes all mounting hardware and 2 keys
- Uses only 5.25" (3U) of panel space
- Rugged textured black powder paint finish

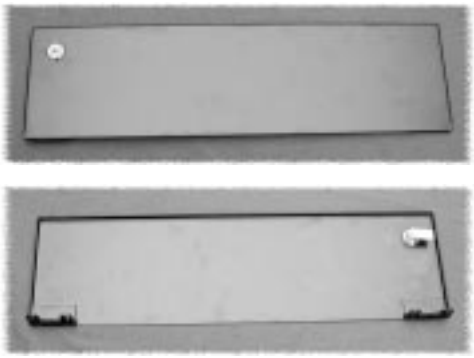

Part Number	Panel Width
RSKS19DOORBK1	19"

RAIL MOUNT STORAGE DRAWERS

- Standard 19" rack mount, available in 3 depths
- Plastic front pull handle
- Complete drawer with slides, hardware, lock & two keys
- Drawer shroud, 14 Ga. steel construction
- Rear support brackets included for all depths or can be supported from rear accessory rail - weight load tested to 120 pounds
- Drawer interior smooth white powder paint for high visibility
- Front face finished in tough textured powder paint
- **MOUNTS ON TWO PAIR OF MOUNTING RAILS (FRONT & BACK)**



12” Deep

Part Number		Drawer Height
Black Textured	Beige Textured	
RDRW1900312BK1	RDRW1900312CG1	3.50"
RDRW1900512BK1	RDRW1900512CG1	5.25"
RDRW1900712BK1	RDRW1900712CG1	7.00"
RDRW1900812BK1	RDRW1900812CG1	8.75"
RDRW1901212BK1	RDRW1901212CG1	12.25"

16” Deep

Part Number		Drawer Height
Black Textured	Beige Textured	
RDRW1900316BK1	RDRW1900316CG1	3.50"
RDRW1900516BK1	RDRW1900516CG1	5.25"
RDRW1900716BK1	RDRW1900716CG1	7.00"
RDRW1900816BK1	RDRW1900816CG1	8.75"
RDRW1901216BK1	RDRW1901216CG1	12.25"

22” Deep

Part Number		Drawer Height
Black Textured	Beige Textured	
RDRW1900322BK1	RDRW1900322CG1	3.50"
RDRW1900522BK1	RDRW1900522CG1	5.25"
RDRW1900722BK1	RDRW1900722CG1	7.00"
RDRW1900822BK1	RDRW1900822CG1	8.75"
RDRW1901222BK1	RDRW1901222CG1	12.25"