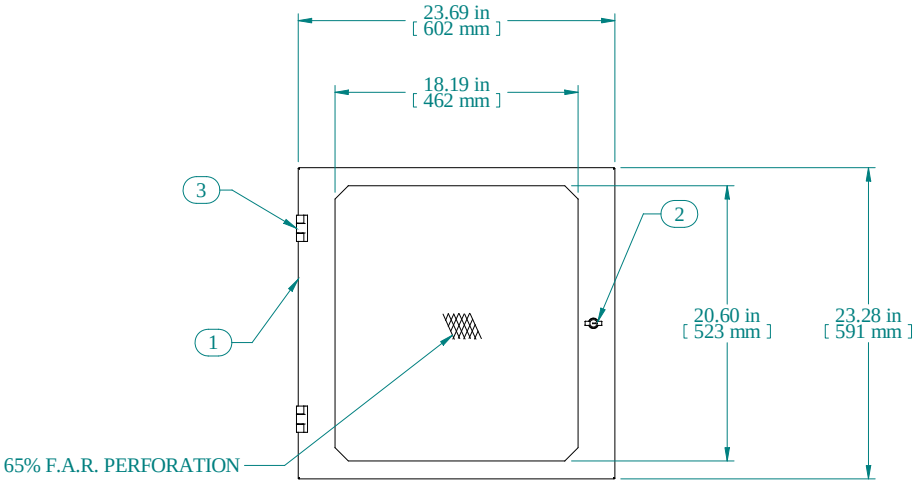

FRONT VIEW

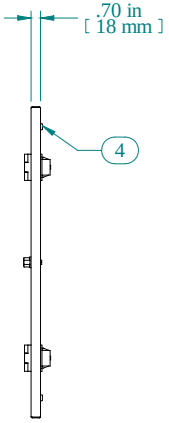

R.S. VIEW

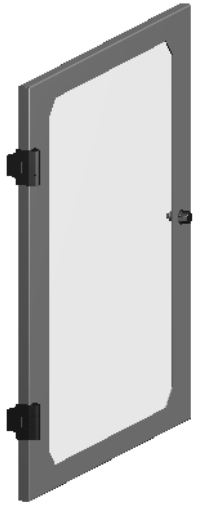

Item Number	Title	Quantity
1	RCSC - PERFORATED DOOR PANEL	1
2	WING KNOB DOOR LOCK	1
3	DOOR HINGE BODY	2
4	RUBBER STOPPERS	2

PART NUMBERS	
RCSC19021PDBK1	PAINTED BLACK TEXTURED

NOTES

Data subject to change without notice. Isometric drawing not to scale.

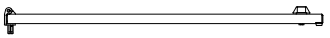

BOTTOM VIEW

HAMMOND MANUFACTURING™

www.hammondmfg.com

PART NO. RCSC19021PD

Mouser Electronics

Authorized Distributor

Click to View Pricing, Inventory, Delivery & Lifecycle Information:

Hammond:
RCSC19021PDBK1