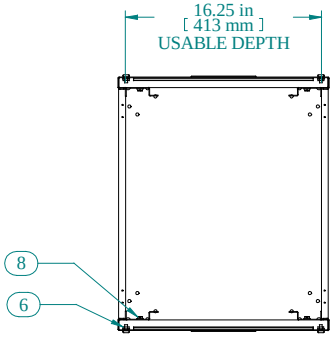

TOP PANEL REMOVED

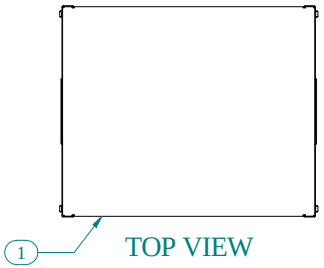

TOP VIEW



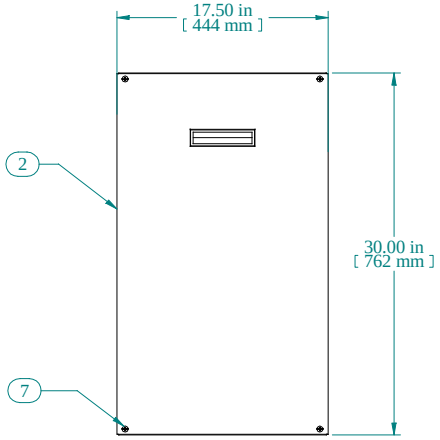

L.S. VIEW

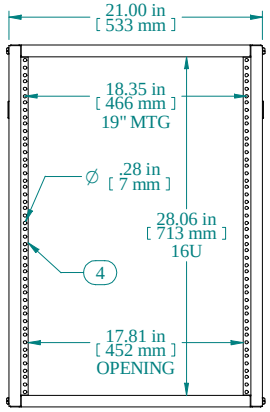

FRONT VIEW

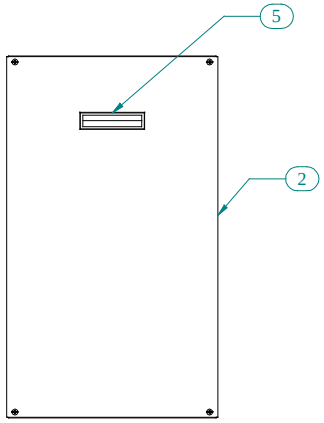

R.S. VIEW

Item Number	Title	Quantity
1	RCHS - TOP PANEL	1
2	RCHS K.D. - SIDE	2
3	RCHS - BOTTOM PANEL	1
4	RCHS K.D. - PUNCHED COMBO RAILS	4
5	BLACK PLASTIC HANDLE	2
6	NUT 1/4-20 KEP	8
7	SCRW1/4-20 X 1/2	8
8	SCREW 1/4-20X1/2 HEX SLOT BOLT	8
9	NUT 1/4-20 SPRING	8

PART NUMBERS	
RCHS1902817BK1	PAINTED BLACK TEXTURED
RCHS1902817CG1	PAINTED CONT. GRAY TEXTURED
RCHS1902817LG1	PAINTED RAL7035 TEXTURED

NOTES
Shipped knockdown for handling ease & protection.

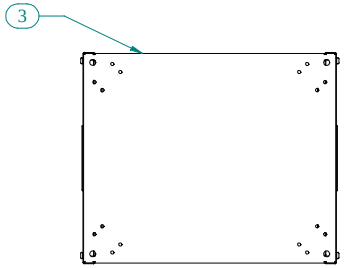

BOTTOM VIEW

Data subject to change without notice. Isometric drawing not to scale.

HAMMOND MANUFACTURING™

www.hammondmfg.com

PART NO. RCHS1902817