Table Top Rack Cabinets (RCBS Series) - *Light Duty*



Textured - Black



Textured - Light Gray (RAL7035)

Click to enlarge

Features:

- Light duty, 16-gauge steel, economy 19” table top rack cabinet...
- Choice of three depths (13", 17" and 24")
- Rails are fixed both front and rear, round hole punched for 10-32 clip-nuts to full EIA hole centers (5/8 - 5/8 - 1/2 inch spacing)...
- Includes rubber feet, two lifting handles, a starter pack of 10-32 clip nuts & matching quantity of **1421ABK** black screws...
- Overall width 21”...
- Overall height 2” over panel height...
- Recommended maximum weight (RCBS1901417 tested) - 600 pounds...
- Rugged textured powder paint finish...
- Stocked in Black & Light Gray (RAL7035)...

13.0" Deep models:

Part Number	Color		Drawing File Size		.zip file size	Panel Height		Number of Clip Nuts Included	Wt. lbs.
						Inches	Units		
RCBS1900313BK1 **RCBS1900313CG1** **RCBS1900313LG1**	**Black Beige Light Gray**		16K		18K	**3.50**	2	8	13
RCBS1900513BK1 **RCBS1900513CG1**	**Black Beige Light**		17K		19K	**5.25**	3	8	15

PART No. RCBS1900513

ISOMETRIC VIEW NOT TO SCALE

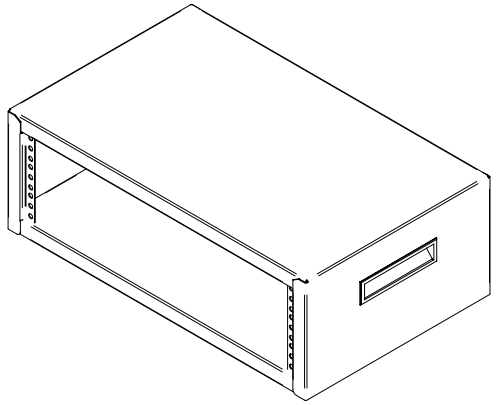

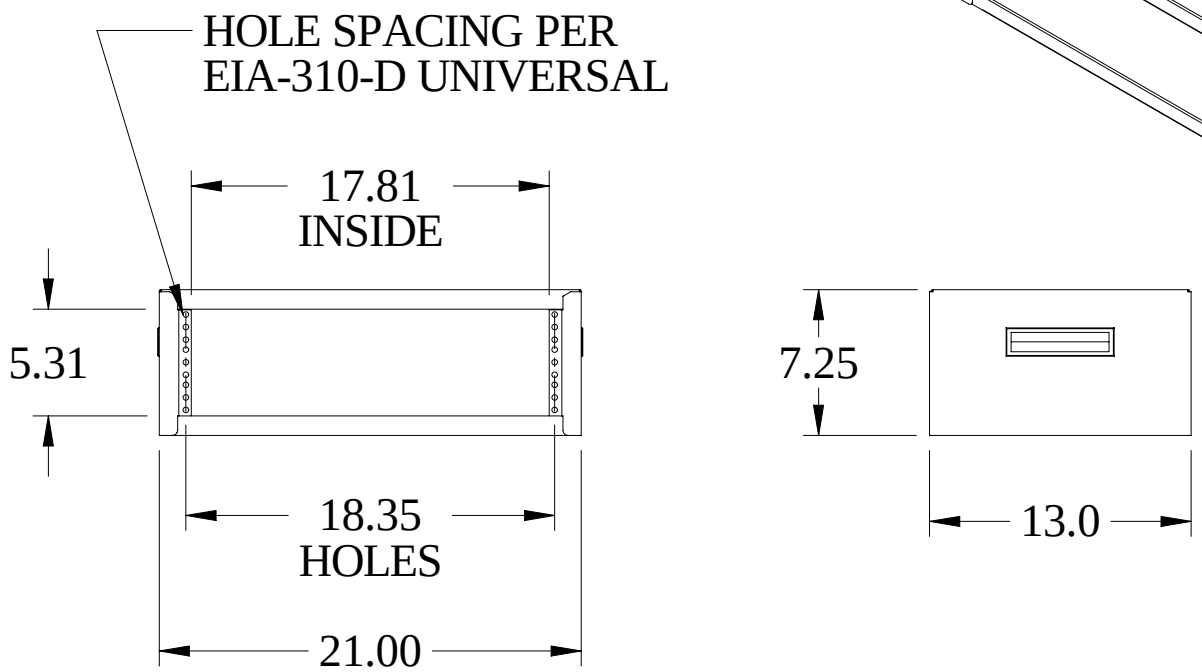

Light Duty (RCBS Series)

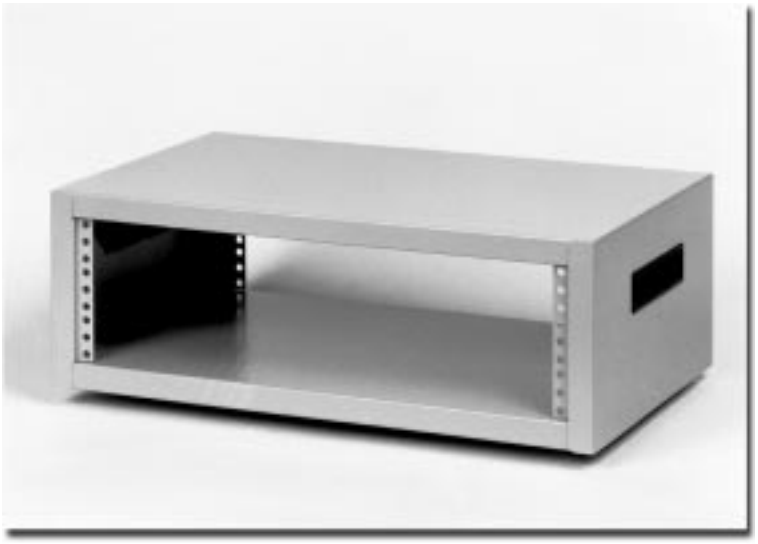

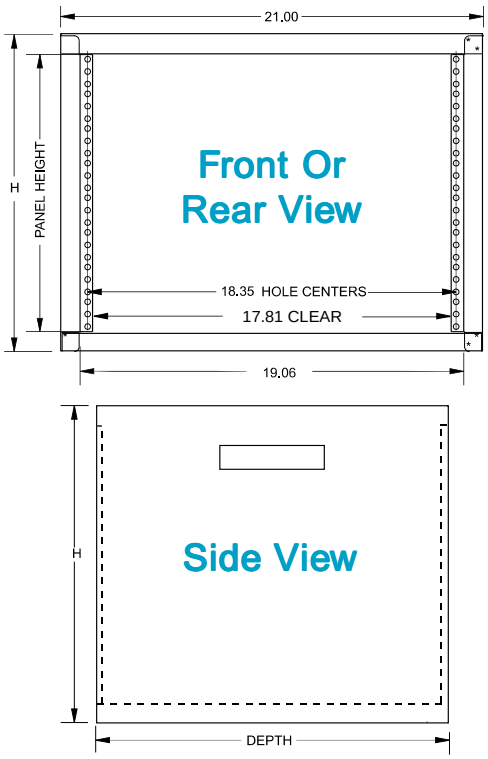

FEATURES

- Front and rear recessed flange, punched for 10-32 clip nuts on EIA universal spacing (5/8 - 5/8 - 1/2 inch)
- Welded, 16-gauge steel, economy 19” table top rack
- Recommended maximum weight (RCBS1901417 tested) - 600 pounds
- Includes rubber feet, two lifting handles and 10-32 clip nuts
- Tough powder finish paint

13” Deep

Part Number			Panel Height		Overall Dimensions			# of Clip Nuts
Black Textured	Beige Textured	ASA61 Grey Smooth	Inches	Units	Height	Width	Depth	
RCBS1900313BK1	RCBS1900313CG1	RCBS1900313GY2	3.50	2	5.50	21.00	13.0	8
RCBS1900513BK1	RCBS1900513CG1	RCBS1900513GY2	5.25	3	7.25	21.00	13.0	8
RCBS1900713BK1	RCBS1900713CG1	RCBS1900713GY2	7.00	4	9.00	21.00	13.0	8
RCBS1900813BK1	RCBS1900813CG1	RCBS1900813GY2	8.75	5	10.75	21.00	13.0	16
RCBS1901013BK1	RCBS1901013CG1	RCBS1901013GY2	10.50	6	12.50	21.00	13.0	16
RCBS1901213BK1	RCBS1901213CG1	RCBS1901213GY2	12.25	7	14.25	21.00	13.0	16
RCBS1901413BK1	RCBS1901413CG1	RCBS1901413GY2	14.00	8	16.00	21.00	13.0	16

17.5” Deep

Part Number			Panel Height		Overall Dimensions			# of Clip Nuts
Black Textured	Beige Textured	ASA61 Grey Smooth	Inches	Units	Height	Width	Depth	
RCBS1900517BK1	RCBS1900517CG1	RCBS1900517GY2	5.25	3	7.25	21.00	17.5	8
RCBS1900717BK1	RCBS1900717CG1	RCBS1900717GY2	7.00	4	9.00	21.00	17.5	8
RCBS1900817BK1	RCBS1900817CG1	RCBS1900817GY2	8.75	5	10.75	21.00	17.5	16
RCBS1901017BK1	RCBS1901017CG1	RCBS1901017GY2	10.50	6	12.50	21.00	17.5	16
RCBS1901217BK1	RCBS1901217CG1	RCBS1901217GY2	12.25	7	14.25	21.00	17.5	16
RCBS1901417BK1	RCBS1901417CG1	RCBS1901417GY2	14.00	8	16.00	21.00	17.5	16