

SECTION A-A



TOP VIEW

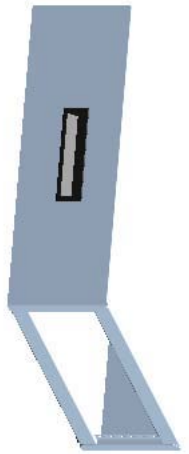

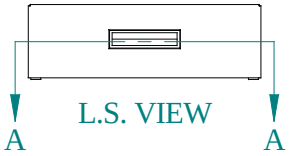

L.S. VIEW

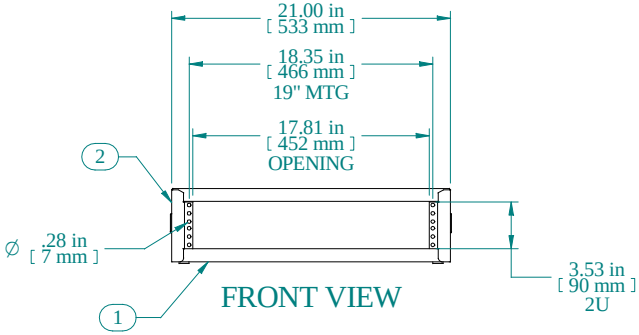

FRONT VIEW

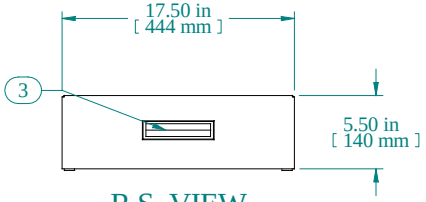

R.S. VIEW

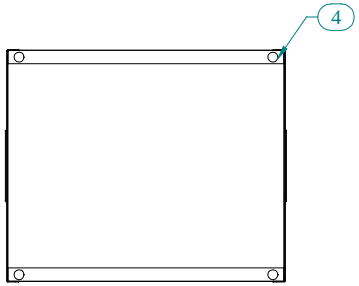

BOTTOM VIEW

Item Number	Title	Quantity
1	RCBS - BOTTOM	1
2	RCBS - TOP & SIDES	1
3	BLACK PLASTIC HANDLE	2
4	PLUG BUMPER	4

PART NUMBERS	
RCBS1900317BK1	PAINTED BLACK TEXTURED
RCBS1900317CG1	PAINTED CONT. GRAY TEXTURED
RCBS1900317LG1	PAINTED RAL7035 TEXTURED

NOTES
Shipped with a starter pack of 10-32 clip nuts & matching quantity of 1421ABK black screws

Data subject to change without notice. Isometric drawing not to scale.

HAMMOND MANUFACTURING™

www.hammondmfg.com

PART NO. RCBS1900317