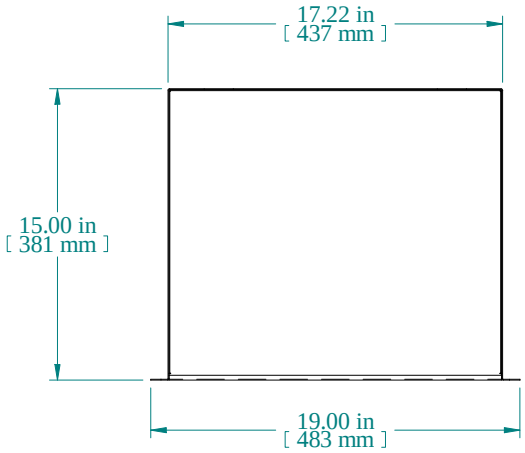

TOP VIEW

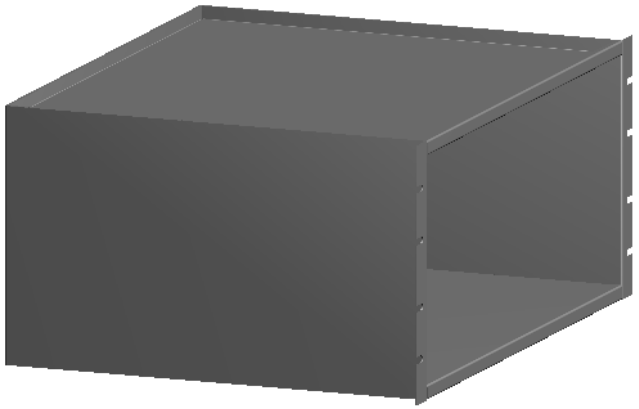

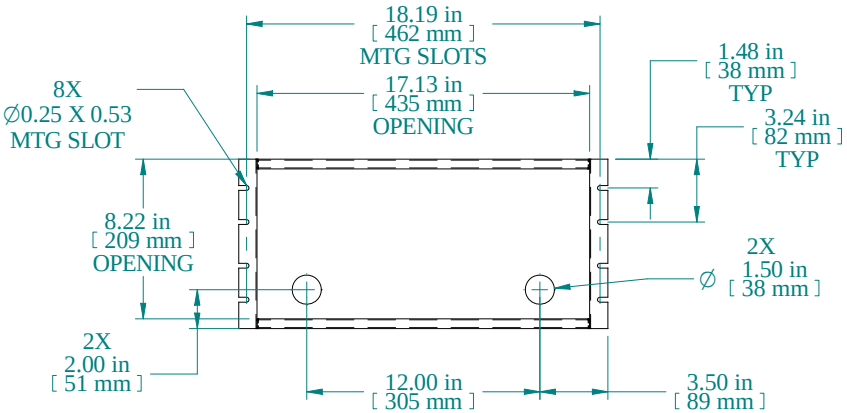

FRONT VIEW

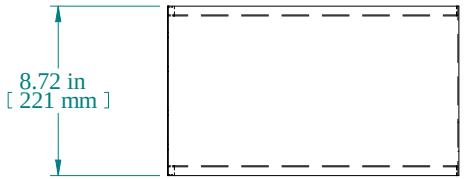

SIDE VIEW

PART NUMBERS	
RASE1900815WH2	PAINTED HAMMOND WHITE

NOTES
Maximum Weight 75 lb Mounting Hardware Not Supplied

Data subject to change without notice. Isometric drawing not to scale.

HAMMOND MANUFACTURING™

www.hammondmfg.com

PART NO. RASE1900815