Customer Information Sheet

DRAWING No.: R30-670XX94	SHEET 2 OF 2	IF IN DOUBT - ASK	©	NOT TO SCALE	THIRD ANGLE PROJECTION	ALL DIMENSIONS IN mm

PART No.	DIM 'L'
R30-6700394	3.00
R30-6700494	4.00
R30-6700594	5.00
R30-6700694	6.00
R30-6700794	7.00
R30-6700894	8.00
R30-6700994	9.00
R30-6701094	10.00
R30-6701194	11.00
R30-6701294	12.00
R30-6701394	13.00
R30-6701494	14.00
R30-6701594	15.00
R30-6701694	16.00
R30-6701894	18.00
R30-6702094	20.00
R30-6702594	25.00

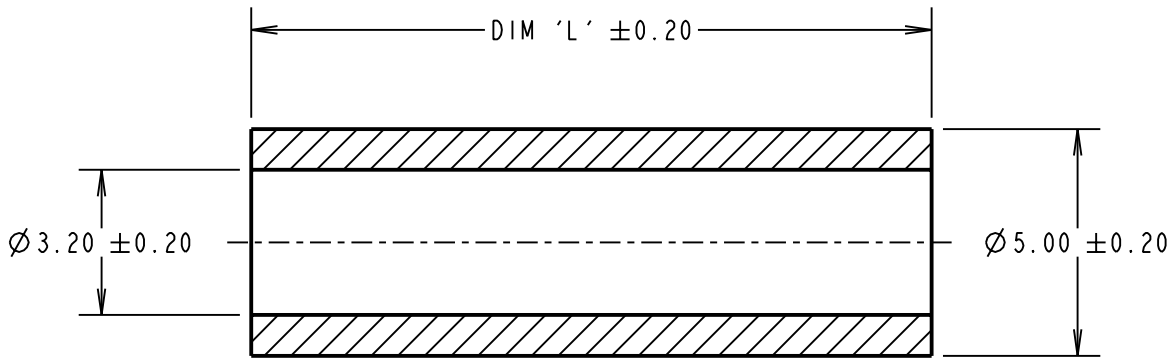

SECTION A-A

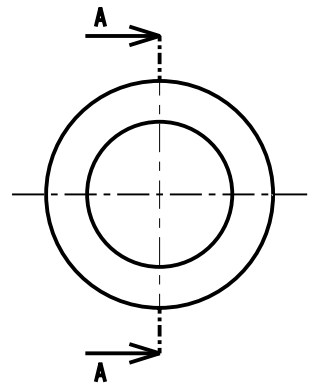

ORDER CODE:

R30-670XX94

LENGTH L IN mm

CP	5	24.02.10	10675
NAME	ISS.	DATE	C/NOTE

APPROVED: C.PENROSE

CHECKED: R.ADDE

DRAWN: W.J.BOURNE

CUSTOMER REF.:

ASSEMBLY DRG:

HARWIN

HARWIN USA
TEL: 603 893 5376
FAX: 603 893 5396
mis@harwin.com

HARWIN Europe (UK)
TEL: 023 9231 4545
FAX: 023 9231 4590
mis@harwin.co.uk

HARWIN Asia
TEL: +65 6 779 4909
FAX: +65 6 779 3868
mis@harwin.com.sg

THIS DRAWING AND ANY INFORMATION OR DESCRIPTIVE MATTER SET OUT HEREON ARE CONFIDENTIAL AND COPYRIGHT PROPERTY OF THE HARWIN GROUP AND MUST NOT BE DISCLOSED, LOANED, COPIED OR USED FOR MANUFACTURING, TENDERING OR FOR ANY OTHER PURPOSE WITHOUT THEIR WRITTEN PERMISSION.

TOLERANCES

X. = ±1mm
X.X = ±0.25mm
X.XX = ±0.10mm
X.XXX = ±0.01mm
ANGLES = ±5°
UNLESS STATED

MATERIAL:

NYLON 66 - WHITE
UL94V-2

FINISH: CLEAN

S/AREA: mm²

TITLE:

M3 CLEARANCE
CIRCULAR SPACER

DRAWING NUMBER:

R30-670XX94

SHT 2 OF 2