Customer Information Sheet

DRAWING No.: R30-300XX02	SHEET 2 OF 2	IF IN DOUBT - ASK	©	NOT TO SCALE	THIRD ANGLE PROJECTION	ALL DIMENSIONS IN mm

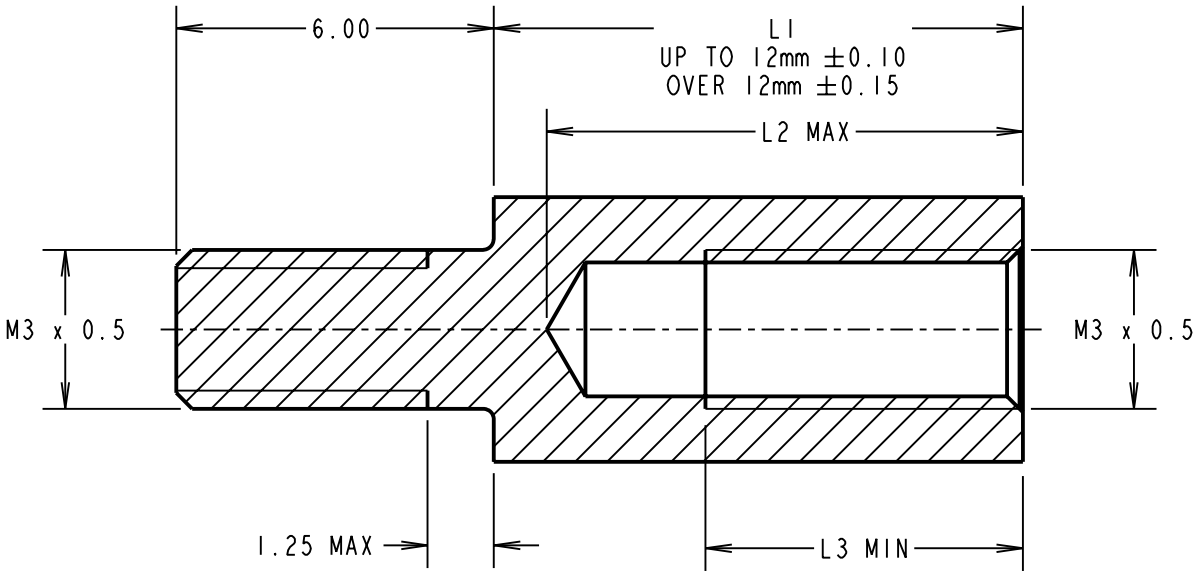

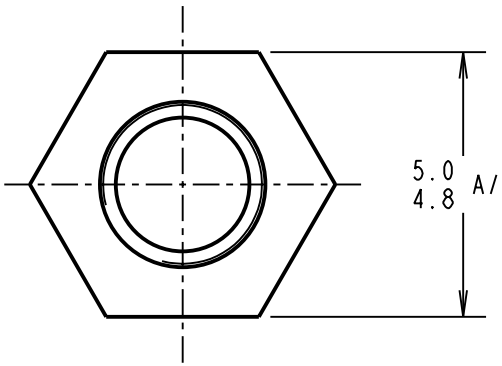

ORDER CODE:
R30-300XX02
LENGTH L1 IN mm

PART No.	L1	L2	L3
R30-3000402	4.00	4.0	2.00
R30-3000502	5.00	4.5	2.50
R30-3000602	6.00	5.5	3.00
R30-3000702	7.00	6.5	4.50
R30-3000802	8.00	7.5	5.50
R30-3000902	9.00	8.5	6.00
R30-3001002	10.00	9.0	6.00
R30-3001102	11.00	10.0	6.00
R30-3001202	12.00	10.0	6.00
R30-3001302	13.00	10.0	6.00
R30-3001402	14.00	10.0	6.00

PART No.	L1	L2	L3
R30-3001502	15.00	10.0	6.00
R30-3001602	16.00	10.0	6.00
R30-3001702	17.00	10.0	6.00
R30-3001802	18.00	10.0	6.00
R30-3001902	19.00	10.0	6.00
R30-3002002	20.00	10.0	6.00
R30-3002102	21.00	10.0	6.00
R30-3002202	22.00	10.0	6.00
R30-3002402	24.00	10.0	6.00
R30-3002502	25.00	10.0	6.00
R30-3002602	26.00	10.0	6.00

PART No.	L1	L2	L3
R30-3003002	30.00	10.0	6.00
R30-3003202	32.00	10.0	6.00
R30-3003402	34.00	10.0	6.00
R30-3003502	35.00	10.0	6.00
R30-3003802	38.00	10.0	6.00
R30-3004002	40.00	10.0	6.00
R30-3004502	45.00	10.0	6.00
R30-3005002	50.00	10.0	6.00
R30-3006002	60.00	10.0	6.00
R30-3008002	80.00	10.0	6.00

CP	20	17.12.09	10614
NAME	ISS.	DATE	C/NOTE

APPROVED: C.PENROSE
CHECKED: R.ADDE
DRAWN: P. COLLINS
CUSTOMER REF.:
ASSEMBLY DRG:

HARWIN

HARWIN USA
TEL: 603 893 5376
FAX: 603 893 5396
mis@harwin.com

HARWIN Europe (UK)
TEL: 023 9231 4545
FAX: 023 9231 4590
mis@harwin.co.uk

HARWIN Asia
TEL: +65 6 779 4909
FAX: +65 6 779 3868
mis@harwin.com.sg

THIS DRAWING AND ANY INFORMATION OR DESCRIPTIVE MATTER SET OUT HEREON ARE CONFIDENTIAL AND COPYRIGHT PROPERTY OF THE HARWIN GROUP AND MUST NOT BE DISCLOSED, LOANED, COPIED OR USED FOR MANUFACTURING, TENDERING OR FOR ANY OTHER PURPOSE WITHOUT THEIR WRITTEN PERMISSION.

TOLERANCES
X. = ±1mm
X.X = ±0.25mm
X.XX = ±0.10mm
X.XXX = ±0.01mm
ANGLES = ±5°
UNLESS STATED

MATERIAL:
BRASS CW614N M TO BS EN 12164
(CuZn39Pb3)

FINISH: NICKEL

S/AREA: mm²

TITLE:
M3 HEXAGONAL
MALE/FEMALE SPACER

DRAWING NUMBER:
R30-300XX02

SHT 2 OF 2