ROLEC - Sealed Diecast Aluminum HandCase (R270 - R271 Series)

ROLEC® ..protects.



click to enlarge
(Assembled View)



click to enlarge
(Application)



click to enlarge
(Group View)

Key Features:

- Designed as a heavy duty hand held - manufactured in diecast aluminum for superior strength.
- Ergonomic design for extended handling without fatigue.
- Two part - styled lid construction. Top half includes smooth recessed area for membrane, label or silkscreen.
- Top half powder painted in a silver grey and the bottom half is powder painted in black.
- P.C. board standoffs are cast into both halves of the enclosure - (see **photo tables** for details). Mounting screws included.
- The two smaller sizes include an ABS plastic battery compartment installed and gasketed access bottom lid. This battery compartment can hold up to 4 AA 1.5V batteries OR 2 - 9V batteries.
- Gasketed lid with two piece "tongue & groove" construction provides protection against access of oil, dust and water.
- Lid screws are stainless steel.
- Designed to meet IP66.

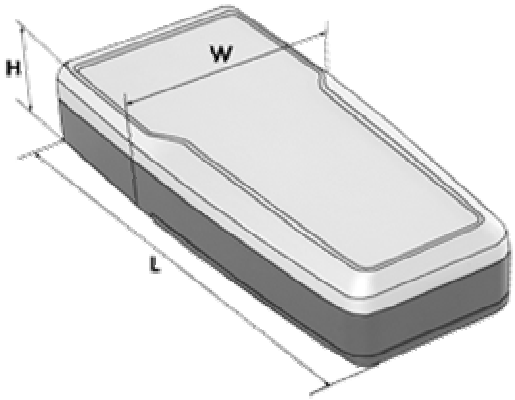

Part Number	Battery Compartment	Units	Length	Width	Enclosure Depth (With Lid)	Weight
R270-080-000	Yes	Inches	7.09	3.15	1.67	1 lb. 1.1 oz.
		mm	180	80	42.4	
R270-100-000	Yes	Inches	8.66	3.94	1.67	1 lb.7.1 oz.
		mm	220	100	42.4	
R271-100-000	No	Inches	8.66	3.94	2.46	1 lb. 8.3 oz.
		mm	220	100	62.4	

Link here to **photo tables** of each part number.



click to enlarge

Assembled View (Bottom)



(click to enlarge)

Open View (Bottom)



(click to enlarge)

Open View (Top)

Exactly what you are looking for???
Link to our stocking distributors - most have "on-line" pricing, stock check and ordering!!!

Our Distributors

Order from your favorite distributor

Copyright; © 2007-2009 Hammond Mfg Co Inc
URL: http://www.hammondmfg.com