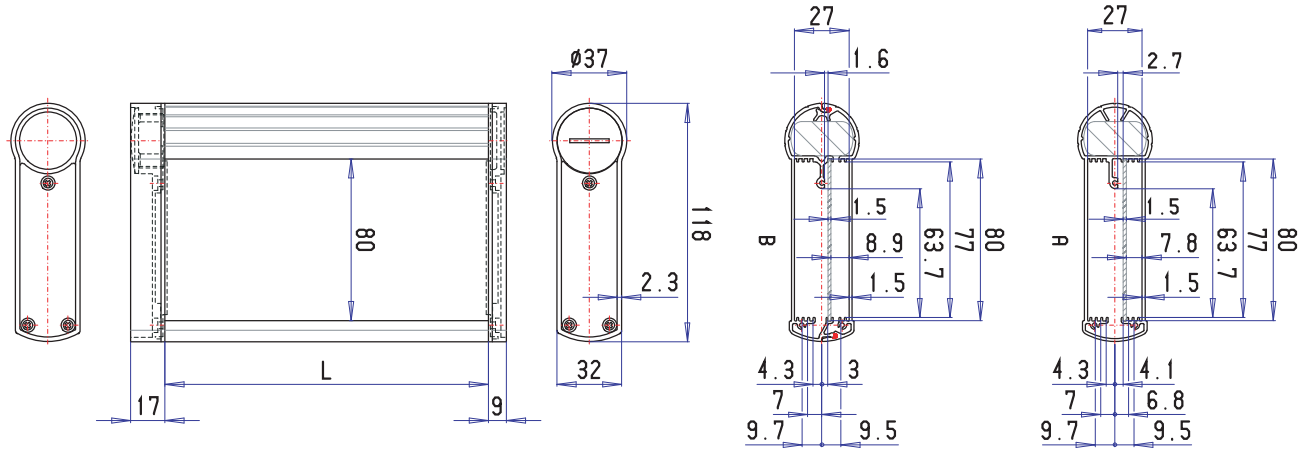
Ø37
118
80
2.3
L
32
17
9
27
1.6
B
1.5
8.9
1.5
63.7
77
80
4.3
3
7
9.7
9.5
27
2.7
A
1.5
7.8
1.5
63.7
77
80
4.3
4.1
7
6.8
9.7
9.5

Mouser Electronics

Authorized Distributor

Click to View Pricing, Inventory, Delivery & Lifecycle Information:

Hammond:

R251-080-160 R250-080-120 R250-080-160 R251-080-120