HAMMOND MANUFACTURING

*Quality Products. Service Excellence.*

# Tara Plus Fixed Elbow 48 *TPSSFE48 Series*



- For use with 48mm round tube and 60x40mm rectangular tube.
- Vertical 48mm tube connection for use with Couplings only (not Base 48).
- Die-cast Aluminum G Al Si 12.
- Large cover opening for easier cable pull through.
- No rotation.
- Accessible from the top.

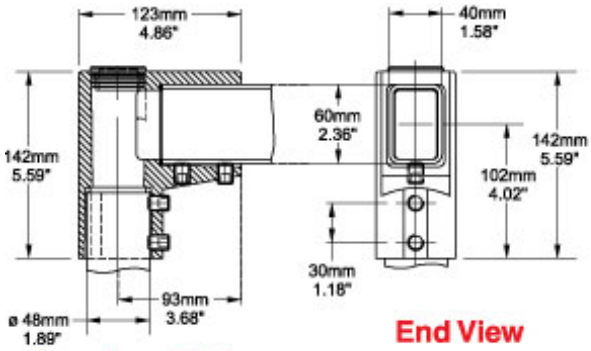


Section of Elbow




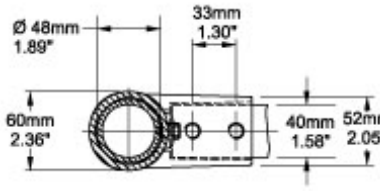


Bottom View

| Part No. | R149-020-000 |
|---|---|

*Data subject to change without notice*

© 2014. Hammond Manufacturing Ltd. All rights reserved.