HAMMOND MANUFACTURING

Quality Products. Service Excellence.

Heavy Duty Elbow *HDSSEL Series*



- Cast Aluminum
- Large cover opening for easier cable pull through.

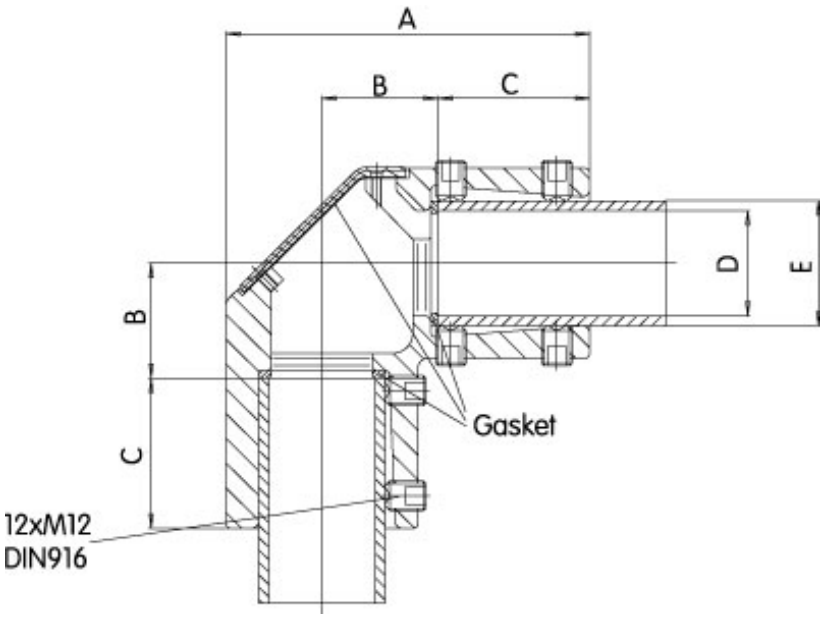

Part No.	System	A	B	C	D	E	Ship Wt. lbs.
R147-020-000R	50	144	46	60	42	50	3
R147-020-200R	80	193	56	83	70	80	6

Data subject to change without notice

© 2014. Hammond Manufacturing Ltd. All rights reserved.