QLINE™ D PUSHBUTTON, TYPE 4X



APPLICATION

Used for insulating and housing 30.5-mm or 22.5-mm pushbuttons in hostile environments, QLINE™ D Enclosures have contoured bodies with flush cover screws for an attractive, contemporary appearance.

SPECIFICATIONS

- High-impact polycarbonate material is used for both body and cover
- Polycarbonate material is easily punched, drilled, filed or sawed
- Straight side walls permit ganging of multiple enclosures
- Cross-point captivated cover screws are stainless steel
- Mounting holes molded directly adjacent to cover screws
- Cover screws protected by removable caps that are both aesthetic and provide tamper resistance
- Molded internal pads for mounting optional panels, rails or other components
- Seamless foam-in-place gasket assures water-tight and dust-tight seal
- Screws provided for mounting optional panel
- Mounting hardware furnished
- Material is halogen free

FINISH

Polycarbonate enclosure material is RAL 7035 light-gray inside and out. Optional panels are unpainted plated steel.

INDUSTRY STANDARDS

UL 508A Listed; Type 4, 4X, 12, 13; No. E61997
cUL Listed per CSA C22.2 No 94; Type 4, 4X, 12, 13; No. E61997
Enclosure flammability evaluated per UL 508A

NEMA/EEMAC Type 4, 4X, 12
CSA File Number 42186: Type 4, 4X, 12
IEC 60529, IP67

ACCESSORIES

See also Accessories.
Hardware Kit
Hinge Kit
Mounting Bracket Kit

BULLETIN: Q41

Standard Product

Catalog Number	AxBxC mm/in.	Hole Size mm/in.	External Dimensions L x W mm/in.	Panel	Panel Size D x E mm/in.	Mounting G x H mm/in.	F mm/in.	J mm/in.	P mm/in.	Q mm/in.	R mm/in.	S mm/in.	U mm/in.	X mm/in.	Y mm/in.	Z mm/in.
Q1PBPCD	75 x 73 x 79 2.95 x 2.87 x 3.11	30.5	82 x 80 3.23 x 3.15	Q88PD	68 x 55 2.68 x 2.17	70 x 50 2.76 x 1.97	72 2.83	70 2.76	58 2.28	44 1.73	— —	58 2.28	3 0.12	40 1.57	41 1.61	— —
Q1PBPCDM	75 x 73 x 79 2.95 x 2.87 x 3.11	22.5	82 x 80 3.23 x 3.15	Q88PD	68 x 55 2.68 x 2.17	70 x 50 2.76 x 1.97	72 2.83	70 2.76	58 2.28	44 1.73	— —	58 2.28	3 0.12	40 1.57	41 1.61	— —
Q2PBPCD	113 x 73 x 79 4.45 x 2.87 x 3.11	30.5	120 x 80 4.72 x 3.15	Q128PD	91 x 65 3.58 x 2.56	108 x 50 4.25 x 1.97	72 2.83	70 2.76	58 2.28	82 3.22	— —	96 3.78	3 0.12	40 1.57	36 1.42	48 1.89
Q2PBPCDM	113 x 73 x 79 4.45 x 2.87 x 3.11	22.5	120 x 80 4.72 x 3.15	Q128PD	91 x 65 3.58 x 2.56	108 x 50 4.25 x 1.97	72 2.83	70 2.76	58 2.28	82 3.22	— —	96 3.78	3 0.12	40 1.57	36 1.42	48 1.89
Q3PBPCD	153 x 73 x 79 6.02 x 2.87 x 3.11	30.5	160 x 80 6.30 x 3.15	Q168PD	131 x 65 5.16 x 2.56	148 x 50 5.83 x 1.97	72 2.83	70 2.76	58 2.28	122 4.80	— —	136 5.35	3 0.12	40 1.57	32 1.26	48 1.89
Q3PBPCDM	153 x 73 x 79 6.02 x 2.87 x 3.11	22.5	160 x 80 6.30 x 3.15	Q168PD	131 x 65 5.16 x 2.56	148 x 50 5.83 x 1.97	72 2.83	70 2.76	58 2.28	122 4.80	— —	136 5.35	3 0.12	40 1.57	32 1.26	48 1.89
Q4PBPCD	193 x 113 x 79 7.60 x 4.45 x 3.11	30.5	200 x 120 7.87 x 4.72	Q2012PD	170 x 100 6.69 x 3.94	188 x 90 7.40 x 3.54	72 2.83	70 2.76	90 3.54	160 6.30	40 1.57	176 6.93	3 0.12	60 2.36	28 1.10	48 1.89
Q4PBPCDM	193 x 113 x 79 7.60 x 4.45 x 3.11	22.5	200 x 120 7.87 x 4.72	Q2012PD	170 x 100 6.69 x 3.94	188 x 90 7.40 x 3.54	72 2.83	70 2.76	90 3.54	160 6.30	40 1.57	176 6.93	3 0.12	60 2.36	28 1.10	48 1.89
Q6PBPCD	233 x 153 x 84 9.17 x 6.02 x 3.29	30.5	240 x 160 9.45 x 6.30	Q2416PD	211 x 148 8.31 x 5.83	228 x 130 8.98 x 5.12	78 3.07	75 2.95	138 5.43	202 7.95	75 2.95	215 8.46	4 0.16	48 1.89	56 2.20	64 2.52

A x B x C are internal dimensions.

Purchase panels separately.

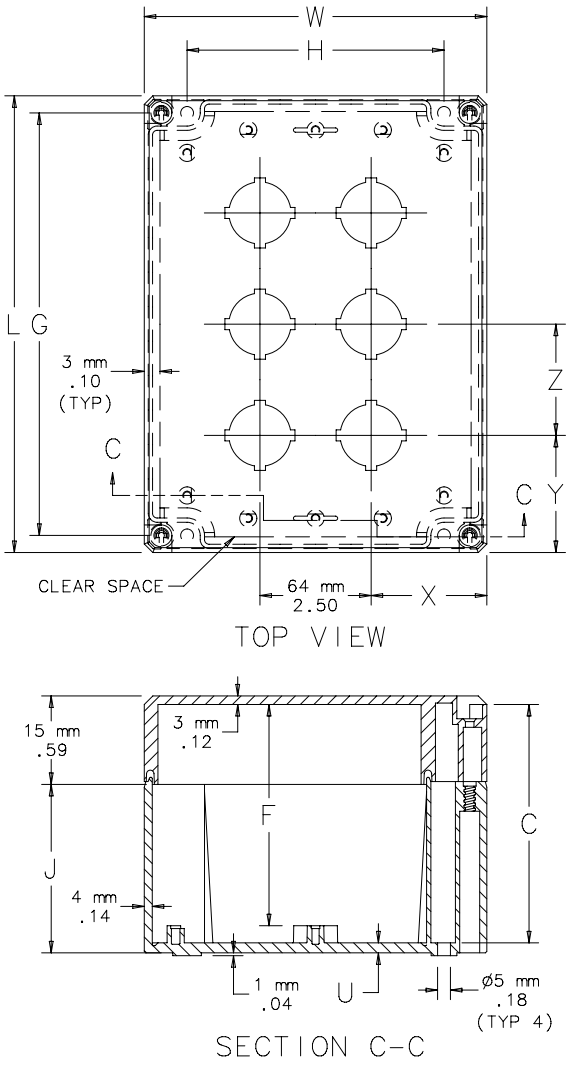

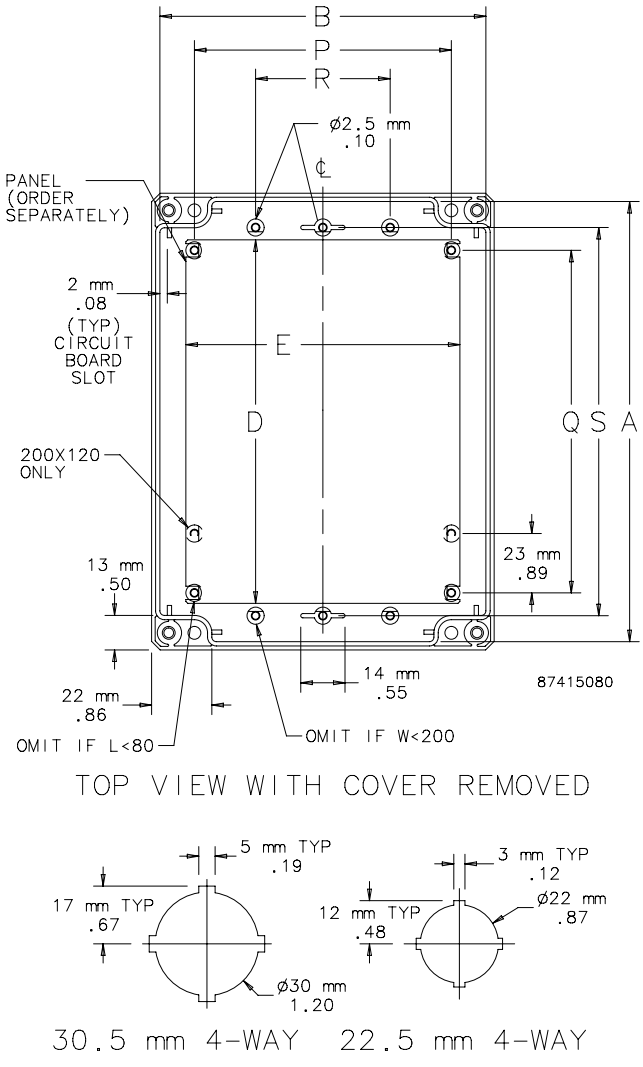

QLINE D Polycarbonate Type 4X Pushbutton Hole Arragement Drawing

