QLINE™ I, TYPE 4X



INDUSTRY STANDARDS

Polycarbonate Enclosure

UL 508A Listed; Type 4, 4X, 12, 13; File No. E61997
cUL Listed per CSA C22.2 No 94; Type 4, 4X, 12, 13; File No. E61997
Enclosure flammability evaluated per UL 508A

NEMA/EEMAC Type 4, 4X, 12, 13
CSA File No. 42186: Type 4, 4X, 12, 13
IEC 60529, IP66

ABS Enclosure
NEMA/EEMAC Type 4, 4X, 12, 13
IEC 60529, IP66

APPLICATION

The largest-sized QLINE™ enclosure, QLINE I provides easy access and protects larger controls from corrosive environments. Choose from screw cover, hinge, internal mounting, variable depth and quick-release latch options to meet your design and security requirements.
The ABS series shares the same features and similar physical properties as the polycarbonate but is a more economical, non-UL rated alternative.

SPECIFICATIONS

- Body is impact-resistant polycarbonate for PCI series and ABS for ABI series
- Opaque and clear covers are impact-resistant polycarbonate for PCI; opaque covers are ABS for ABI series
- Polycarbonate and ABS material is easily punched, drilled, filed or sawed
- Mounting holes molded directly under cover screws
- Molded internal pads for mounting optional panels, rails and other components
- Molded internal rails for mounting adjustable-depth panel kit
- Screws provided for mounting optional panel
- Optional extension rings are molded polycarbonate
- Cover includes a molded-in hole for wire lead
- Seamless foam-in-place gasket assures water-tight and dust-tight seal
- Material is halogen free

Screw Cover Enclosures have easy-to-remove covers attached to body with strong, durable polyamide cross-point cover screws.
Enclosures with Quick-Release Latches have polycarbonate hinges and polyester latches with a padlock provision.

FINISH

Polycarbonate and ABS enclosure material is RAL 7035 light-gray inside and out. Optional panels are plated steel.

ACCESSORIES

See also Accessories.
Brass Insert Kit
Cover Screw Kit
Extension Rings
Hardware Kit
H2OMIT™ Vent Drains, Type 4X
Hinge Kit
HOL-SEALERS™ Non-Metallic Hole Seals
Mounting Bracket Kit
Panel Depth Fitting

MODIFICATION AND CUSTOMIZATION

Hoffman excels at modifying and customizing products to your specifications. Contact your local Hoffman sales office or distributor for complete information.

BULLETIN: Q41

Standard Product **Polycarbonate**

Catalog Number	AxBxC mm/in.	Cover Style	Cover Type	External Dim's L x W mm/in.	Panel	Panel Size D x E mm/in.	Extension Ring	Mounting G x H mm/in.	F mm/in.	P mm/in.	Q mm/in.	R mm/in.	S mm/in.	T mm/in.	U mm/in.	Y mm/in.	Z mm/in.
Q202013PCI	188 x 188 x 123 7.40 x 7.40 x 4.84	Opaque	Screw Cover	200 x 200 7.87 x 7.87	Q2020PI	160 x 160 6.30 x 6.30	Q2020EXTI	180 x 180 7.09 x 7.09	115 4.53	150 5.91	150 5.91	140 5.51	140 5.51	120 4.72	110 4.33	100 3.94	100 3.94
Q202013PCICC	188 x 188 x 123 7.40 x 7.40 x 4.84	Clear	Screw Cover	200 x 200 7.87 x 7.87	Q2020PI	160 x 160 6.30 x 6.30	Q2020EXTI	180 x 180 7.09 x 7.09	115 4.53	150 5.91	150 5.91	140 5.51	140 5.51	120 4.72	120 4.33	100 3.94	100 3.94
Q302013PCI	288 x 188 x 123 11.34 x 7.40 x 4.84	Opaque	Screw Cover	300 x 200 11.81 x 7.87	Q3020PI	260 x 160 10.24 x 6.30	Q3020EXTI	280 x 180 11.02 x 7.09	115 4.53	150 5.91	250 9.84	140 5.51	240 9.45	120 4.72	210 8.27	100 3.94	200 7.87
Q302013PCICC	288 x 188 x 123 11.34 x 7.40 x 4.84	Clear	Screw Cover	300 x 200 11.81 x 7.87	Q3020PI	260 x 160 10.24 x 6.30	Q3020EXTI	280 x 180 11.02 x 7.09	115 4.53	150 5.91	250 9.84	140 5.51	240 9.45	120 4.72	210 8.27	100 3.94	200 7.87
Q402013PCI	388 x 188 x 123 15.28 x 7.40 x 4.84	Opaque	Screw Cover	400 x 200 15.75 x 7.87	Q4020PI	360 x 160 14.17 x 6.30	Q4020EXTI	380 x 180 14.96 x 7.09	115 4.53	150 5.91	350 13.78	140 5.51	340 13.39	120 4.72	310 12.20	100 3.94	300 11.81
Q402013PCICC	388 x 188 x 123 15.28 x 7.40 x 4.84	Clear	Screw Cover	400 x 200 15.75 x 7.87	Q4020PI	360 x 160 14.17 x 6.30	Q4020EXTI	380 x 180 14.96 x 7.09	115 4.53	150 5.91	350 13.78	140 5.51	340 13.39	120 4.72	310 12.20	100 3.94	300 11.81
Q303013PCI	288 x 288 x 123 11.34 x 11.34 x 4.84	Opaque	Screw Cover	300 x 300 11.81 x 11.81	Q3030PI	260 x 260 10.24 x 10.24	Q3030EXTI	280 x 280 11.02 x 11.02	115 4.53	250 9.84	250 9.84	240 9.45	240 9.45	220 8.66	210 8.27	200 7.87	200 7.87
Q303013PCICC	288 x 288 x 123 11.34 x 11.34 x 4.84	Clear	Screw Cover	300 x 300 11.81 x 11.81	Q3030PI	260 x 260 10.24 x 10.24	Q3030EXTI	280 x 280 11.02 x 11.02	115 4.53	250 9.84	250 9.84	240 9.45	240 9.45	220 8.66	210 8.27	200 7.87	200 7.87
Q403013PCI	388 x 288 x 123 15.28 x 11.34 x 4.84	Opaque	Screw Cover	400 x 300 15.75 x 11.81	Q4030PI	360 x 260 14.17 x 10.24	Q4030EXTI	380 x 280 14.96 x 11.02	115 4.53	250 9.84	350 13.78	240 9.45	340 13.39	220 8.66	310 12.20	200 7.87	300 11.81
Q403013PCICC	388 x 288 x 123 15.28 x 11.34 x 4.84	Clear	Screw Cover	400 x 300 15.75 x 11.81	Q4030PI	360 x 260 14.17 x 10.24	Q4030EXTI	380 x 280 14.96 x 11.02	115 4.53	250 9.84	350 13.78	240 9.45	340 13.39	220 8.66	310 12.20	200 7.87	300 11.81
Q603013PCI	588 x 288 x 123 23.15 x 11.34 x 4.84	Opaque	Screw Cover	600 x 300 23.62 x 11.81	Q6030PI	560 x 260 22.05 x 10.24	Q6030EXTI	580 x 280 22.83 x 11.02	115 4.53	250 9.84	550 21.65	240 9.45	540 21.26	220 8.66	510 20.08	200 7.87	500 19.69
Q603013PCICC	588 x 288 x 123 23.15 x 11.34 x 4.84	Clear	Screw Cover	600 x 300 23.62 x 11.81	Q6030PI	560 x 260 22.05 x 10.24	Q6030EXTI	580 x 280 22.83 x 11.02	115 4.53	250 9.84	550 21.65	240 9.45	540 21.26	220 8.66	510 20.08	200 7.87	500 19.69
Q604013PCI	588 x 388 x 123 23.15 x 15.28 x 4.84	Opaque	Screw Cover	600 x 400 23.62 x 15.75	Q6040PI	560 x 360 22.05 x 14.17	Q6040EXTI	580 x 380 22.83 x 14.96	115 4.53	350 13.78	550 21.65	340 13.39	540 21.26	320 12.60	510 20.08	300 11.81	500 19.69
Q604013PCICC	588 x 388 x 123 23.15 x 15.28 x 4.84	Clear	Screw Cover	600 x 400 23.62 x 15.75	Q6040PI	560 x 360 22.05 x 14.17	Q6040EXTI	580 x 380 22.83 x 14.96	115 4.53	350 13.78	550 21.65	340 13.39	540 21.26	320 12.60	510 20.08	300 11.81	500 19.69
Q202018PCI	188 x 188 x 173 7.40 x 7.40 x 6.81	Opaque	Screw Cover	200 x 200 7.87 x 7.87	Q2020PI	160 x 160 6.30 x 6.30	Q2020EXTI	180 x 180 7.09 x 7.09	165 6.50	150 5.91	150 5.91	140 5.51	140 5.51	120 4.72	110 4.33	100 3.94	100 3.94
Q202018PCICC	188 x 188 x 173 7.40 x 7.40 x 6.81	Clear	Screw Cover	200 x 200 7.87 x 7.87	Q2020PI	160 x 160 6.30 x 6.30	Q2020EXTI	180 x 180 7.09 x 7.09	165 6.50	150 5.91	150 5.91	140 5.51	140 5.51	120 4.72	110 4.33	100 3.94	100 3.94
Q302018PCI	288 x 188 x 173 11.34 x 7.40 x 6.81	Opaque	Screw Cover	300 x 200 11.81 x 7.87	Q3020PI	260 x 160 10.24 x 6.30	Q3020EXTI	280 x 180 11.02 x 7.09	165 6.50	150 5.91	250 9.84	140 5.51	240 9.45	120 4.72	110 4.33	100 3.94	200 7.87
Q302018PCICC	288 x 188 x 173 11.34 x 7.40 x 6.81	Clear	Screw Cover	300 x 200 11.81 x 7.87	Q3020PI	260 x 160 10.24 x 6.30	Q3020EXTI	280 x 180 11.02 x 7.09	165 6.50	150 5.91	250 9.84	140 5.51	240 9.45	120 4.72	110 4.33	100 3.94	200 7.87
Q402018PCI	388 x 188 x 173 15.28 x 7.40 x 6.81	Opaque	Screw Cover	400 x 200 15.75 x 7.87	Q4020PI	360 x 160 14.17 x 6.30	Q4020EXTI	380 x 180 14.96 x 7.09	165 6.50	150 5.91	350 13.78	140 5.51	340 13.39	120 4.72	310 12.20	100 3.94	300 11.81
Q402018PCICC	388 x 188 x 173 15.28 x 7.40 x 6.81	Clear	Screw Cover	400 x 200 15.75 x 7.87	Q4020PI	360 x 160 14.17 x 6.30	Q4020EXTI	380 x 180 14.96 x 7.09	165 6.50	150 5.91	350 13.78	140 5.51	340 13.39	120 4.72	310 12.20	100 3.94	300 11.81
Q303018PCI	288 x 288 x 173 11.34 x 11.34 x 6.81	Opaque	Screw Cover	300 x 300 11.81 x 11.81	Q3030PI	260 x 260 10.24 x 10.24	Q3030EXTI	280 x 280 11.02 x 11.02	165 6.50	250 9.84	250 9.84	240 9.45	240 9.45	220 8.66	210 8.27	200 7.87	200 7.87
Q303018PCICC	288 x 288 x 173 11.34 x 11.34 x 6.81	Clear	Screw Cover	300 x 300 11.81 x 11.81	Q3030PI	260 x 260 10.24 x 10.24	Q3030EXTI	280 x 280 11.02 x 11.02	165 6.50	250 9.84	250 9.84	240 9.45	240 9.45	220 8.66	210 8.27	200 7.87	200 7.87
Q403018PCI	388 x 288 x 173 15.28 x 11.34 x 6.81	Opaque	Screw Cover	400 x 300 15.75 x 11.81	Q4030PI	360 x 260 14.17 x 10.24	Q4030EXTI	380 x 280 14.96 x 11.02	165 6.50	250 9.84	350 13.78	240 9.45	340 13.39	220 8.66	310 12.20	200 7.87	300 11.81
Q403018PCICC	388 x 288 x 173 15.28 x 11.34 x 6.81	Clear	Screw Cover	400 x 300 15.75 x 11.81	Q4030PI	360 x 260 14.17 x 10.24	Q4030EXTI	380 x 280 14.96 x 11.02	165 6.50	250 9.84	350 13.78	240 9.45	340 13.39	220 8.66	310 12.20	200 7.87	300 11.81
Q603018PCI	588 x 288 x 173 23.15 x 11.34 x 6.81	Opaque	Screw Cover	600 x 300 23.62 x 11.81	Q6030PI	560 x 260 22.05 x 10.24	Q6030EXTI	580 x 280 22.83 x 11.02	165 6.50	250 9.84	550 21.65	240 9.45	540 21.26	220 8.66	510 20.08	200 7.87	500 19.69
Q603018PCICC	588 x 288 x 173 23.15 x 11.34 x 6.81	Clear	Screw Cover	600 x 300 23.62 x 11.81	Q6030PI	560 x 260 22.05 x 10.24	Q6030EXTI	580 x 280 22.83 x 11.02	165 6.50	250 9.84	550 21.65	240 9.45	540 21.26	220 8.66	510 20.08	200 7.87	500 19.69
Q604018PCI	588 x 388 x 173 23.15 x 15.28 x 6.81	Opaque	Screw Cover	600 x 400 23.62 x 15.75	Q6040PI	560 x 360 22.05 x 14.17	Q6040EXTI	580 x 380 22.83 x 14.96	165 6.50	350 13.78	550 21.65	340 13.39	540 21.26	320 12.60	510 20.08	300 11.81	500 19.69
Q604018PCICC	588 x 388 x 173 23.15 x 15.28 x 6.81	Clear	Screw Cover	600 x 400 23.62 x 15.75	Q6040PI	560 x 360 22.05 x 14.17	Q6040EXTI	580 x 380 22.83 x 14.96	165 6.50	350 13.78	550 21.65	340 13.39	540 21.26	320 12.60	510 20.08	300 11.81	500 19.69
Q202013PCIQRR	188 x 188 x 123 7.40 x 7.40 x 4.84	Opaque	QR Latch	200 x 200 7.87 x 7.87	Q2020PI	160 x 160 6.30 x 6.30	—	180 x 180 7.09 x 7.09	115 4.53	150 5.91	150 5.91	140 5.51	140 5.51	120 4.72	110 4.33	100 3.94	100 3.94
Q202013PCIQRCCR	188 x 188 x 123 7.40 x 7.40 x 4.84	Clear	QR Latch	200 x 200 7.87 x 7.87	Q2020PI	160 x 160 6.30 x 6.30	—	180 x 180 7.09 x 7.09	115 4.53	150 5.91	150 5.91	140 5.51	140 5.51	120 4.72	110 4.33	100 3.94	100 3.94
Q302013PCIQRR	288 x 188 x 123 11.34 x 7.40 x 4.84	Opaque	QR Latch	300 x 200 11.81 x 7.87	Q3020PI	260 x 160 10.24 x 6.30	—	280 x 180 11.02 x 7.09	115 4.53	150 5.91	250 9.84	140 5.51	240 9.45	120 4.72	210 8.27	100 3.94	200 7.87
Q302013PCIQRCCR	288 x 188 x 123 11.34 x 7.40 x 4.84	Clear	QR Latch	300 x 200 11.81 x 7.87	Q3020PI	260 x 160 10.24 x 6.30	—	280 x 180 11.02 x 7.09	115 4.53	150 5.91	250 9.84	140 5.51	240 9.45	120 4.72	210 8.27	100 3.94	200 7.87
Q402013PCIQRR	388 x 188 x 123 15.28 x 7.40 x 4.84	Opaque	QR Latch	400 x 200 15.75 x 7.87	Q4020PI	360 x 160 14.17 x 6.30	—	380 x 180 14.96 x 7.09	115 4.53	150 5.91	350 13.78	140 5.51	340 13.39	120 4.72	310 12.20	100 3.94	300 11.81
Q402013PCIQRCCR	388 x 188 x 123 15.28 x 7.40 x 4.84	Clear	QR Latch	400 x 200 15.75 x 7.87	Q4020PI	360 x 160 14.17 x 6.30	—	380 x 180 14.96 x 7.09	115 4.53	150 5.91	350 13.78	140 5.51	340 13.39	120 4.72	310 12.20	100 3.94	300 11.81
Q303013PCIQRR	288 x 288 x 123 11.34 x 11.34 x 4.84	Opaque	QR Latch	300 x 300 11.81 x 11.81	Q3030PI	260 x 260 10.24 x 10.24	—	280 x 280 11.02 x 11.02	115 4.53	250 9.84	250 9.84	240 9.45	240 9.45	220 8.66	210 8.27	200 7.87	200 7.87
Q303013PCIQRCCR	288 x 288 x 123 11.34 x 11.34 x 4.84	Clear	QR Latch	300 x 300 11.81 x 11.81	Q3030PI	260 x 260 10.24 x 10.24	—	280 x 280 11.02 x 11.02	115 4.53	250 9.84	250 9.84	240 9.45	240 9.45	220 8.66	210 8.27	200 7.87	200 7.87
Q403013PCIQRR	388 x 288 x 123 15.28 x 11.34 x 4.84	Opaque	QR Latch	400 x 300 15.75 x 11.81	Q4030PI	360 x 260 14.17 x 10.24	—	380 x 280 14.96 x 11.02	115 4.53	250 9.84	350 13.78	240 9.45	340 13.39	220 8.66	310 12.20	200 7.87	300 11.81
Q403013PCIQRCCR	388 x 288 x 123 15.28 x 11.34 x 4.84	Clear	QR Latch	400 x 300 15.75 x 11.81	Q4030PI	360 x 260 14.17 x 10.24	—	380 x 280 14.96 x 11.02	115 4.53	250 9.84	350 13.78	240 9.45	340 13.39	220 8.66	310 12.20	200 7.87	300 11.81

Catalog Number	AxBxC mm/in.	Cover Style	Cover Type	External Dim's L x W mm/in.	Panel	Panel Size D x E mm/in.	Extension Ring	Mounting G x H mm/in.	F mm/in.	P mm/in.	Q mm/in.	R mm/in.	S mm/in.	T mm/in.	U mm/in.	Y mm/in.	Z mm/in.
Q603013PCIQRR	588 x 288 x 123 23.15 x 11.34 x 4.84	Opaque	QR Latch	600 x 300 23.62 x 11.81	Q6030PI	560 x 260 22.05 x 10.24	—	580 x 280 22.83 x 11.02	115 4.53	250 9.84	550 21.65	240 9.45	540 21.26	220 8.66	510 20.08	200 7.87	500 19.69
Q603013PCIQRCCR	588 x 288 x 123 23.15 x 11.34 x 4.84	Clear	QR Latch	600 x 300 23.62 x 11.81	Q6030PI	560 x 260 22.05 x 10.24	—	580 x 280 22.83 x 11.02	115 4.53	250 9.84	550 21.65	240 9.45	540 21.26	220 8.66	510 20.08	200 7.87	500 19.69
Q604013PCIQRR	588 x 388 x 123 23.15 x 15.28 x 4.84	Opaque	QR Latch	600 x 400 23.62 x 15.75	Q6040PI	560 x 360 22.05 x 14.17	—	580 x 380 22.83 x 14.96	115 4.53	350 13.78	550 21.65	340 13.39	540 21.26	320 12.60	510 20.08	300 11.81	500 19.69
Q604013PCIQRCCR	588 x 388 x 123 23.15 x 15.28 x 4.84	Clear	QR Latch	600 x 400 23.62 x 15.75	Q6040PI	560 x 360 22.05 x 14.17	—	580 x 380 22.83 x 14.96	115 4.53	350 13.78	550 21.65	340 13.39	540 21.26	320 12.60	510 20.08	300 11.81	500 19.69
Q202018PCIQRR	188 x 188 x 173 7.40 x 7.40 x 6.81	Opaque	QR Latch	200 x 200 7.87 x 7.87	Q2020PI	160 x 160 6.30 x 6.30	—	180 x 180 7.09 x 7.09	115 6.50	150 5.91	150 5.91	140 5.51	140 5.51	120 4.72	110 4.33	100 3.94	100 3.94
Q202018PCIQRCCR	188 x 188 x 173 7.40 x 7.40 x 6.81	Clear	QR Latch	200 x 200 7.87 x 7.87	Q2020PI	160 x 160 6.30 x 6.30	—	180 x 180 7.09 x 7.09	165 6.50	150 5.91	150 5.91	140 5.51	140 5.51	120 4.72	110 4.33	100 3.94	100 3.94
Q302018PCIQRR	288 x 188 x 173 11.34 x 7.40 x 6.81	Opaque	QR Latch	300 x 200 11.81 x 7.87	Q3020PI	260 x 160 10.24 x 6.30	—	280 x 180 11.02 x 7.09	165 6.50	150 5.91	250 9.84	140 5.51	240 9.45	120 4.72	110 4.33	100 3.94	200 7.87
Q302018PCIQRCCR	288 x 188 x 173 11.34 x 7.40 x 6.81	Clear	QR Latch	300 x 200 11.81 x 7.87	Q3020PI	260 x 160 10.24 x 6.30	—	280 x 180 11.02 x 7.09	165 6.50	150 5.91	250 9.84	140 5.51	240 9.45	120 4.72	110 4.33	100 3.94	200 7.87
Q402018PCIQRR	388 x 188 x 173 15.28 x 7.40 x 6.81	Opaque	QR Latch	400 x 200 15.75 x 7.87	Q4020PI	360 x 160 14.17 x 6.30	—	380 x 180 14.96 x 7.09	165 6.50	150 5.91	350 13.78	140 5.51	340 13.39	120 4.72	310 12.20	100 3.94	300 11.81
Q402018PCIQRCCR	388 x 188 x 173 15.28 x 7.40 x 6.81	Clear	QR Latch	400 x 200 15.75 x 7.87	Q4020PI	360 x 160 14.17 x 6.30	—	380 x 180 14.96 x 7.09	165 6.50	150 5.91	350 13.78	140 5.51	340 13.39	120 4.72	310 12.20	100 3.94	300 11.81
Q303018PCIQRR	288 x 288 x 173 11.34 x 11.34 x 6.81	Opaque	QR Latch	300 x 300 11.81 x 11.81	Q3030PI	260 x 260 10.24 x 10.24	—	280 x 280 11.02 x 11.02	165 6.50	250 9.84	250 9.84	240 9.45	240 9.45	220 8.66	210 8.27	200 7.87	200 7.87
Q303018PCIQRCCR	288 x 288 x 173 11.34 x 11.34 x 6.81	Clear	QR Latch	300 x 300 11.81 x 11.81	Q3030PI	260 x 260 10.24 x 10.24	—	280 x 280 11.02 x 11.02	165 6.50	250 9.84	250 9.84	240 9.45	240 9.45	220 8.66	210 8.27	200 7.87	200 7.87
Q403018PCIQRR	388 x 288 x 173 15.28 x 11.34 x 6.81	Opaque	QR Latch	400 x 300 15.75 x 11.81	Q4030PI	360 x 260 14.17 x 10.24	—	380 x 280 14.96 x 11.02	165 6.50	250 9.84	350 13.78	240 9.45	340 13.39	220 8.66	310 12.20	200 7.87	300 11.81
Q403018PCIQRCCR	388 x 288 x 173 15.28 x 11.34 x 6.81	Clear	QR Latch	400 x 300 15.75 x 11.81	Q4030PI	360 x 260 14.17 x 10.24	—	380 x 280 14.96 x 11.02	165 6.50	250 9.84	350 13.78	240 9.45	340 13.39	220 8.66	310 12.20	200 7.87	300 11.81
Q603018PCIQRR	588 x 288 x 173 23.15 x 11.34 x 6.81	Opaque	QR Latch	600 x 300 23.62 x 11.81	Q6030PI	560 x 260 22.05 x 10.24	—	580 x 280 22.83 x 11.02	165 6.50	250 9.84	550 21.65	240 9.45	540 21.25	220 8.66	510 20.08	200 7.87	500 19.69
Q603018PCIQRCCR	588 x 288 x 173 23.15 x 11.37 x 6.81	Clear	QR Latch	600 x 300 23.62 x 11.81	Q6030PI	560 x 260 22.05 x 10.24	—	580 x 280 22.83 x 11.02	165 6.50	250 9.84	550 21.65	240 9.45	540 21.26	220 8.66	510 20.08	200 7.87	500 19.69
Q604018PCIQRR	588 x 388 x 173 23.15 x 15.28 x 6.81	Opaque	QR Latch	600 x 400 23.62 x 15.75	Q6040PI	560 x 360 22.05 x 14.17	—	580 x 380 22.83 x 14.96	165 6.50	350 13.78	550 21.65	340 13.39	540 21.28	320 12.60	510 20.08	300 11.81	500 19.69
Q604018PCIQRCCR	588 x 388 x 173 23.15 x 15.28 x 6.81	Clear	QR Latch	600 x 400 23.62 x 15.75	Q6040PI	560 x 360 22.05 x 14.17	—	580 x 380 22.83 x 14.96	165 6.50	350 13.78	550 21.65	340 13.39	540 21.26	320 12.60	510 20.08	300 11.81	500 19.69

A x B x C are internal dimensions.

Purchase panels and extension rings separately.

Standard Product **ABS, Screw Cover**

Catalog Number	AxBxC mm/in.	Cover Style	External Dim's L x W mm/in.	Panel	Panel Size D x E mm/in.	Extension Ring	Mounting G x H mm/in.	F mm/in.	P mm/in.	Q mm/in.	R mm/in.	S mm/in.	T mm/in.	U mm/in.	Y mm/in.	Z mm/in.
Q202013ABI	188 x 188 x 123 7.40 x 7.40 x 4.84	Opaque	200 x 200 7.87 x 7.87	Q2020PI	160 x 160 6.30 x 6.30	Q2020EXTI	180 x 180 7.09 x 7.09	115 4.53	150 5.91	150 5.91	140 5.51	140 5.51	120 4.72	110 4.33	100 3.94	100 3.94
Q202013ABICC	188 x 188 x 123 7.40 x 7.40 x 4.84	Clear	200 x 200 7.87 x 7.87	Q2020PI	160 x 160 6.30 x 6.30	Q2020EXTI	180 x 180 7.09 x 7.09	115 4.53	150 5.91	150 5.91	140 5.51	140 5.51	120 4.72	110 4.33	100 3.94	100 3.94
Q302013ABI	288 x 188 x 123 11.34 x 7.40 x 4.84	Opaque	300 x 200 11.81 x 7.87	Q3020PI	260 x 160 10.24 x 6.30	Q3020EXTI	280 x 180 11.02 x 7.09	115 4.53	150 5.91	250 9.84	140 5.51	240 9.45	120 4.72	210 8.27	100 3.94	200 7.87
Q302013ABICC	288 x 188 x 123 11.34 x 7.40 x 4.84	Clear	300 x 200 11.81 x 7.87	Q3020PI	260 x 160 10.24 x 6.30	Q3020EXTI	280 x 180 11.02 x 7.09	115 4.53	150 5.91	250 9.84	140 5.51	240 9.45	120 4.72	210 8.27	100 3.94	200 7.87
Q402013ABI	388 x 188 x 123 15.28 x 7.40 x 4.84	Opaque	400 x 200 15.75 x 7.87	Q4020PI	360 x 160 14.17 x 6.30	Q4020EXTI	380 x 180 14.96 x 7.09	115 4.53	150 5.91	350 13.78	140 5.51	340 13.39	120 4.72	310 12.20	100 3.94	300 11.81
Q402013ABICC	388 x 188 x 123 15.28 x 7.40 x 4.84	Clear	400 x 200 15.75 x 7.87	Q4020PI	360 x 160 14.17 x 6.30	Q4020EXTI	380 x 180 14.96 x 7.09	115 4.53	150 5.91	350 13.78	140 5.51	340 13.39	120 4.72	310 12.20	100 3.94	300 11.81
Q303013ABI	288 x 288 x 123 11.34 x 11.34 x 4.84	Opaque	300 x 300 11.81 x 11.81	Q3030PI	260 x 260 10.24 x 10.24	Q3030EXTI	280 x 280 11.02 x 11.02	115 4.53	250 9.84	250 9.84	240 9.45	240 9.45	220 8.66	210 8.27	200 7.87	200 7.87
Q303013ABICC	288 x 288 x 123 11.34 x 11.34 x 4.84	Clear	300 x 300 11.81 x 11.81	Q3030PI	260 x 260 10.24 x 10.24	Q3030EXTI	280 x 280 11.02 x 11.02	115 4.53	250 9.84	250 9.84	240 9.45	240 9.45	220 8.66	210 8.27	200 7.87	200 7.87
Q403013ABI	388 x 288 x 123 15.28 x 11.34 x 4.84	Opaque	400 x 300 15.75 x 11.81	Q4030PI	360 x 260 14.17 x 10.24	Q4030EXTI	380 x 280 14.96 x 11.02	115 4.53	250 9.84	350 13.78	240 9.45	340 13.39	220 8.66	310 12.20	200 7.87	300 11.81
Q403013ABICC	388 x 288 x 123 15.28 x 11.34 x 4.84	Clear	400 x 300 15.75 x 11.81	Q4030PI	360 x 260 14.17 x 10.24	Q4030EXTI	380 x 280 14.96 x 11.02	115 4.53	250 9.84	350 13.78	240 9.45	340 13.39	220 8.66	310 12.20	200 7.87	300 11.81
Q603013ABI	588 x 288 x 123 23.15 x 11.34 x 4.84	Opaque	600 x 300 23.62 x 11.81	Q6030PI	560 x 260 22.05 x 10.24	Q6030EXTI	580 x 280 22.83 x 11.02	115 4.53	250 9.84	550 21.65	240 9.45	540 21.26	220 8.66	510 20.08	200 7.87	300 11.81
Q603013ABICC	588 x 288 x 123 23.15 x 11.34 x 4.84	Clear	600 x 300 23.62 x 11.81	Q6030PI	560 x 260 22.05 x 10.24	Q6030EXTI	580 x 280 22.83 x 11.02	115 4.53	250 9.84	550 21.65	240 9.45	540 21.26	220 8.66	510 20.08	200 7.87	300 11.81
Q604013ABI	588 x 388 x 123 23.15 x 15.28 x 4.84	Opaque	600 x 400 23.62 x 15.75	Q6040PI	560 x 360 22.05 x 14.17	Q6040EXTI	580 x 380 22.83 x 14.96	115 4.53	350 13.78	550 21.65	340 13.39	540 21.26	320 12.60	510 20.08	300 11.81	500 19.69
Q604013ABICC	588 x 388 x 123 23.15 x 15.28 x 4.84	Clear	600 x 400 23.62 x 15.75	Q6040PI	560 x 360 22.05 x 14.17	Q6040EXTI	580 x 380 22.83 x 14.96	115 4.53	350 13.78	550 21.65	340 13.39	540 21.26	320 12.60	510 20.08	300 11.81	500 19.69
Q202018ABI	188 x 188 x 173 7.40 x 7.40 x 6.81	Opaque	200 x 200 7.87 x 7.87	Q2020PI	160 x 160 6.30 x 6.30	Q2020EXTI	180 x 180 7.09 x 7.09	165 6.50	150 5.91	150 5.91	140 5.51	140 5.51	120 4.72	110 4.33	100 3.94	100 3.94
Q202018ABICC	188 x 188 x 173 7.40 x 7.40 x 6.81	Clear	200 x 200 7.87 x 7.87	Q2020PI	160 x 160 6.30 x 6.30	Q2020EXTI	180 x 180 7.09 x 7.09	165 6.50	150 5.91	150 5.91	140 5.51	140 5.51	120 4.72	110 4.33	100 3.94	100 3.94
Q302018ABI	288 x 188 x 173 11.34 x 7.40 x 6.81	Opaque	300 x 200 11.81 x 7.87	Q3020PI	260 x 160 10.24 x 6.30	Q3020EXTI	280 x 180 11.02 x 7.09	165 6.50	150 5.91	250 9.84	140 5.51	240 9.45	120 4.72	110 4.33	100 3.94	200 7.87
Q302018ABICC	288 x 188 x 173 11.34 x 7.40 x 6.81	Clear	300 x 200 11.81 x 7.87	Q3020PI	260 x 160 10.24 x 6.30	Q3020EXTI	280 x 180 11.02 x 7.09	165 6.50	150 5.91	250 9.84	140 5.51	240 9.45	120 4.72	110 4.33	100 3.94	200 7.87
Q402018ABI	388 x 188 x 173 15.28 x 7.40 x 6.81	Opaque	400 x 200 15.75 x 7.87	Q4020PI	360 x 160 14.17 x 6.30	Q4020EXTI	380 x 180 14.96 x 7.09	165 6.50	150 5.91	350 13.78	140 5.51	340 13.39	120 4.72	310 12.20	100 3.94	300 11.81
Q402018ABICC	388 x 188 x 173 15.28 x 7.40 x 6.81	Clear	400 x 200 15.75 x 7.87	Q4020PI	360 x 160 14.17 x 6.30	Q4020EXTI	380 x 180 14.96 x 7.09	165 6.50	150 5.91	350 13.78	140 5.51	340 13.39	120 4.72	310 12.20	100 3.94	300 11.81
Q303018ABI	288 x 288 x 173 11.34 x 11.34 x 6.81	Opaque	300 x 300 11.81 x 11.81	Q3030PI	260 x 260 10.24 x 10.24	Q3030EXTI	280 x 280 11.02 x 11.02	165 6.50	250 9.84	250 9.84	240 9.45	240 9.45	220 8.66	210 8.27	200 7.87	200 7.87
Q303018ABICC	288 x 288 x 173 11.34 x 11.34 x 6.81	Clear	300 x 300 11.81 x 11.81	Q3030PI	260 x 260 10.24 x 10.24	Q3030EXTI	280 x 280 11.02 x 11.02	165 6.50	250 9.84	250 9.84	240 9.45	240 9.45	220 8.66	210 8.27	200 7.87	200 7.87
Q403018ABI	388 x 288 x 173 15.28 x 11.34 x 6.81	Opaque	400 x 300 15.75 x 11.81	Q4030PI	360 x 260 14.17 x 10.24	Q4030EXTI	380 x 280 14.96 x 11.02	165 6.50	250 9.84	350 13.78	240 9.45	340 13.39	220 8.66	310 12.20	200 7.87	300 11.81
Q403018ABICC	388 x 288 x 173 15.28 x 11.34 x 6.81	Clear	400 x 300 15.75 x 11.81	Q4030PI	360 x 260 14.17 x 10.24	Q4030EXTI	380 x 280 14.96 x 11.02	165 6.50	250 9.84	350 13.78	240 9.45	340 13.39	220 8.66	310 12.20	200 7.87	300 11.81
Q603018ABI	588 x 288 x 173 23.15 x 11.34 x 6.81	Opaque	600 x 300 23.62 x 11.81	Q6030PI	560 x 260 22.05 x 10.24	Q6030EXTI	580 x 280 22.83 x 11.02	165 6.50	250 9.84	550 21.65	240 9.45	540 21.26	220 8.66	510 20.08	200 7.87	500 19.69
Q603018ABICC	588 x 288 x 173 23.15 x 11.34 x 6.81	Clear	600 x 300 23.62 x 11.81	Q6030PI	560 x 260 22.05 x 10.24	Q6030EXTI	580 x 280 22.83 x 11.02	165 6.50	250 9.84	550 21.65	240 9.45	540 21.26	220 8.66	510 20.08	200 7.87	500 19.69
Q604018ABI	588 x 388 x 173 23.15 x 15.28 x 6.81	Opaque	600 x 400 23.62 x 15.75	Q6040PI	560 x 360 22.05 x 14.17	Q6040EXTI	580 x 380 22.83 x 14.96	165 6.50	350 13.78	550 21.65	340 13.39	540 21.26	320 12.60	510 20.08	300 11.81	500 19.69
Q604018ABICC	588 x 388 x 173 23.15 x 15.28 x 6.81	Clear	600 x 400 23.62 x 15.75	Q6040PI	560 x 360 22.05 x 14.17	Q6040EXTI	580 x 380 22.83 x 14.96	165 6.50	350 13.78	550 21.65	340 13.39	540 21.26	320 12.60	510 20.08	300 11.81	500 19.69

QLINE I Polycarbonate and ABS Type 4X Enclosures with Quick-Release Latches Dimension Drawing

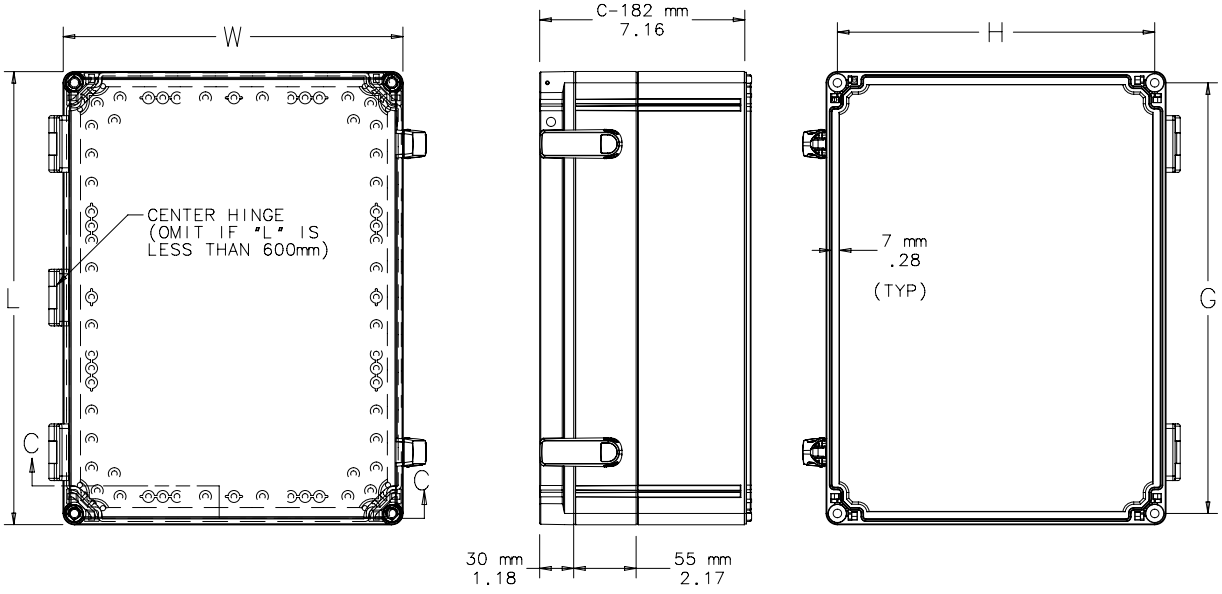

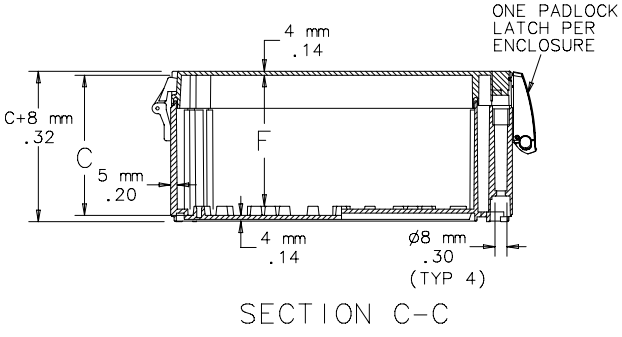

SECTION C-C

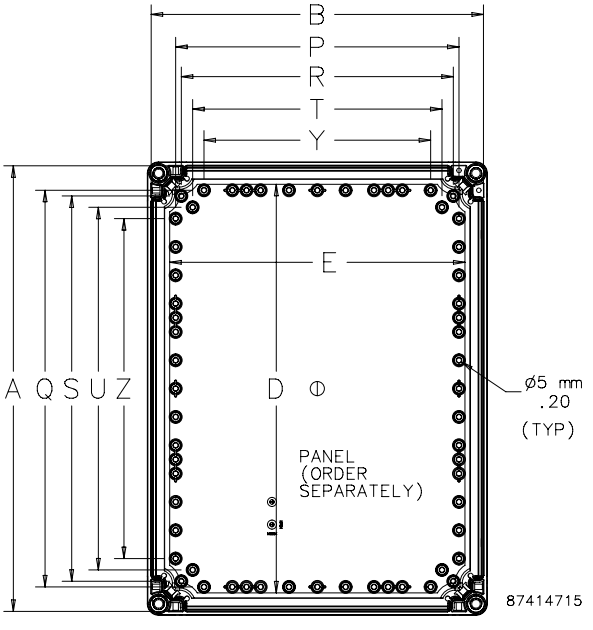

TOP VIEW WITH
COVER REMOVED

QLINE I Polycarbonate and ABS Screw Cover Dimension Drawing

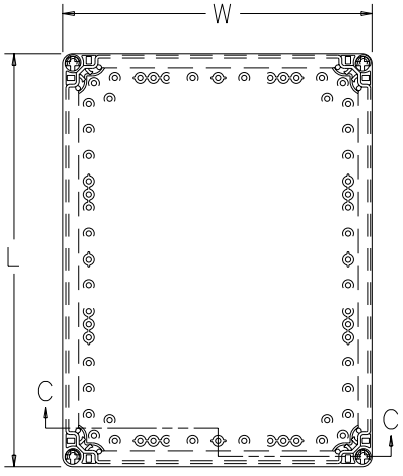

TOP VIEW

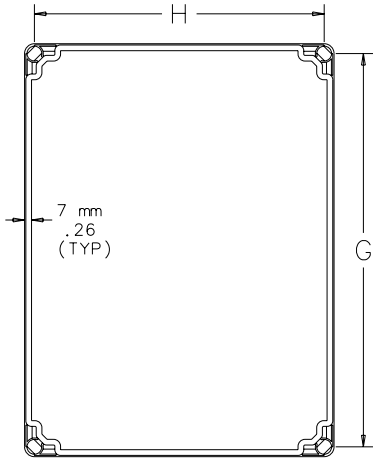

BOTTOM VIEW

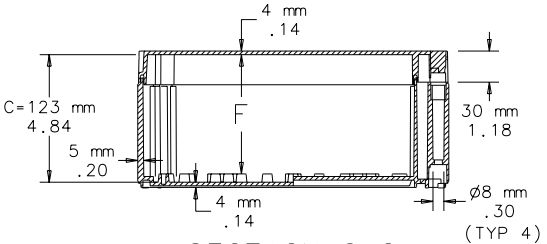

SECTION C-C

NOTE: Panel screws are M5 pan head.

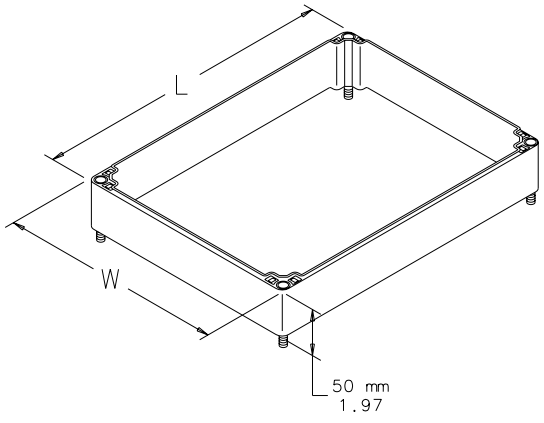

OPTIONAL EXTENSION RING

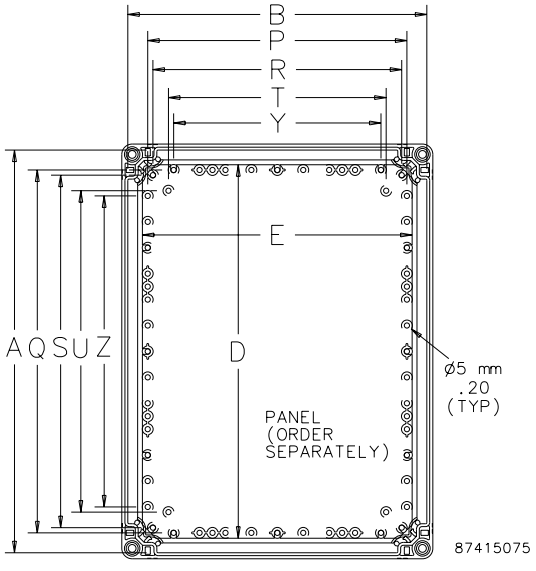

TOP VIEW WITH COVER REMOVED

COVER SCREW KIT

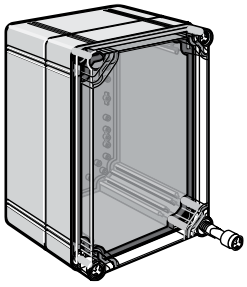

Screws are polyamide. Wing-head-style screws provide rapid access to enclosure interior without requiring special tools to open. Kit includes four polyamide cover screws and four self-tapping, plated panel screws. Tamper-resistant screws have molded 3-mm double-bit drive; kit includes four cover screws, one key and four self-tapping, plated panel screws. Use on all QLINE™ I enclosures.

BULLETIN: Q41Y

Catalog Number	Description
QIWHSK	wing-head screw
QITSK	3-mm tamper-resistant double-bit

BRASS INSERT KIT

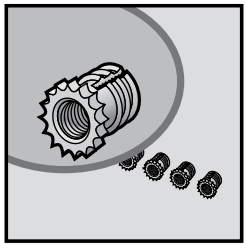

Four M5 self-tapping brass inserts screw into molded pads in bottom of enclosure. Inserts have M3 internal thread.

BULLETIN: Q41Y

Catalog Number
QBIK

PANEL DEPTH FITTING

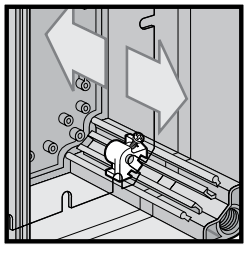

Panel Depth Fitting attaches to corner molded rails of enclosure to facilitate full-range front-to-back panel adjustment. Package includes four polyamide fittings and plated screws. Use on all QLINE I enclosures.

BULLETIN: Q41Y

Catalog Number
QIPDF

SWING PANEL



Adjustable-depth aluminum swing panels, for use in QLINE™ I polycarbonate enclosures, provide a convenient way to install controls and instruments near enclosure body opening while providing access and security. Suitable applications include water, pulp and paper, petroleum and chemical processing, food, packaging and pharmaceutical applications.

BULLETIN: Q41Y

Catalog Number	Panel Size D x E mm/in.	Fits Enclosure Size A x B mm/in.	Hinged Side of Enclosure
QIHFP22A	186 x 180 7.32 x 7.09	200 x 200 7.87 x 7.87	200
QIHFP23A	186 x 280 7.32 x 11.02	300 x 200 11.81 x 7.87	200
QIHFP32A	286 x 180 11.26 x 7.09	300 x 200 11.81 x 7.87	300
QIHFP42A	386 x 180 15.20 x 7.09	400 x 200 15.75 x 7.87	400
QIHFP33A	286 x 280 11.26 x 11.02	300 x 300 11.81 x 11.81	300
QIHFP43A	386 x 280 15.20 x 11.02	400 x 300 15.75 x 11.81	400
QIHFP63A	586 x 280 23.07 x 11.02	600 x 300 23.62 x 11.81	600
QIHFP64A	586 x 380 23.07 x 14.96	600 x 400 23.62 x 15.75	600

HINGE KIT

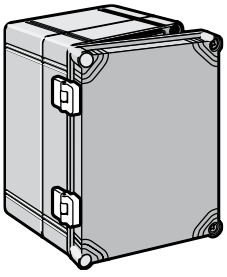

Hinge Kit includes two polyamide hinges, eight M4 self-tapping plated screws, eight flat washers and drilling template. Use on all QLINE™ I enclosures.
Hinge Kit meets Type 4 requirements. Three hinges required for 600-mm sides.

BULLETIN: Q41Y

Catalog Number
QIHK

MOUNTING BRACKET KIT

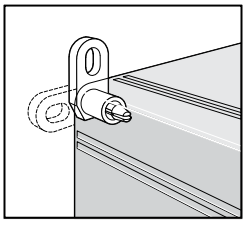

Mounting Bracket Kit has four polycarbonate brackets and four M3 self-tapping, plated screws. Kit is field-installable. Use on all QLINE™ I Enclosures. Maintains listed ratings for enclosure.

BULLETIN: Q41Y

Catalog Number
QIMFK

HARDWARE KIT

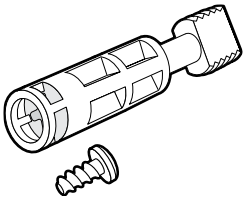

Hardware Kit includes four polyamide cover screws and four self-tapping, plated panel screws. This kit is offered as a replacement kit for lost or damaged hardware originally furnished with the enclosure.

BULLETIN: Q41Y

Catalog Number	Description
QIHK424	42-mm screws

EXTENSION RINGS

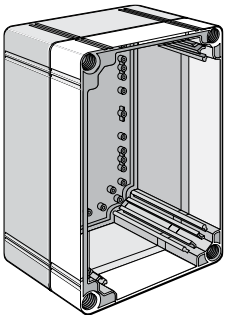

Extension rings can be added to QLINE™ I enclosures to provide additional 50-mm to enclosure depth. Extension rings are polycarbonate and cannot be used with quick-release latches.

BULLETIN: Q41Y

Catalog Number
Q2020EXTI
Q3020EXTI
Q3030EXTI
Q4020EXTI
Q4030EXTI
Q6030EXTI
Q6040EXTI

PANELS

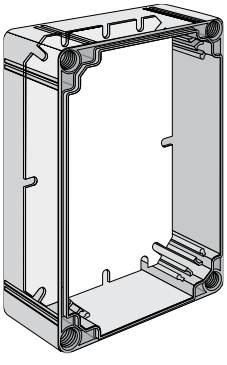

BULLETIN: Q41Y

Catalog Number	Panel Size D x E (mm)	Panel Size D x E (in.)
Q2020PI	160 x 160	6.30 x 6.30
Q3020PI	260 x 160	10.24 x 6.30
Q3030PI	260 x 260	10.24 x 10.24
Q4020PI	360 x 160	14.17 x 6.30
Q4030PI	360 x 260	14.17 x 10.24
Q6030PI	560 x 260	22.05 x 10.24
Q6040PI	560 X 360	22.05 x 14.17