QLINE™ E, TYPE 4X



INDUSTRY STANDARDS

Polycarbonate Enclosure

UL 508A Listed; Type 4, 4X, 6, 12, 13; File No. E61997 cUL Listed per CSA C22.2 No 94; Type 4, 4X, 6, 12, 13; File No. E61997 Enclosure flammability evaluated per UL 508A

NEMA/EEMAC Type 4, 4X, 6, 12, 13
CSA File No. 42186: Type 4, 4X, 12, 13
IEC 60529, IP67

ABS Enclosure
NEMA/EEMAC Type 4, 4X, 6, 12, 13
IEC 60529, IP67

APPLICATION

QLINE™ E Enclosures house larger controls, provide additional size-range options and offer greater internal mounting flexibility than smaller QLINE products. Featuring contoured bodies with flush cover screws, they are functional in corrosive environments and can withstand occasional submersion.
The ABS series shares the same features and similar physical properties as the polycarbonate but is a more economical, non-UL rated alternative.

SPECIFICATIONS

- Body is impact-resistant polycarbonate for PCE series and ABS for ABE series
- Opaque and clear covers are impact-resistant polycarbonate for PCE, opaque covers are ABS for ABE series
- Polycarbonate and ABS material is easily punched, drilled, filed or sawed
- Cross-point flush cover screws are strong, durable polyamide
- Cover includes a molded-in wire lead hole
- Mounting tracks along body side walls for PC card installation
- Molded internal pads for mounting optional panels, rails and other components
- Seamless foam-in-place gasket assures water-tight and dust-tight seal
- Material is halogen free

FINISH

Polycarbonate and ABS enclosure material is RAL 7035 light-gray inside and out. Optional panels are plated steel.

ACCESSORIES

See also Accessories.
Brass Inserts
Hardware Kit
Hinge Kit
HOL-SEALERS™ Non-Metallic Hole Seals
Mounting Bracket Kit

MODIFICATION AND CUSTOMIZATION

Hoffman excels at modifying and customizing products to your specifications. Contact your local Hoffman sales office or distributor for complete information.

BULLETIN: Q41

Standard Product **Polycarbonate**

Catalog Number	AxBxC mm/in.	Cover Style	External Dimensions L x W mm/in.	Panel	Panel Size D x E mm/in.	Mounting G x H mm/in.	F mm/in.	K mm/in.	P mm/in.	Q mm/in.	S mm/in.
Q1388PCE	119 x 69 x 67 4.69 x 2.72 x 2.64	Opaque	125 x 75 4.92 x 2.95	Q138PE	98 x 48 3.86 x 1.89	110 x 60 4.33 x 2.36	61 2.40	25 0.98	40 1.57	75 2.95	90 3.54
Q1388PCECC	119 x 69 x 67 4.69 x 2.72 x 2.64	Clear	125 x 75 4.92 x 2.95	Q138PE	98 x 48 3.86 x 1.89	110 x 60 4.33 x 2.36	61 2.40	25 0.98	40 1.57	75 2.95	90 3.54
Q13138PCE	119 x 119 x 67 4.69 x 4.69 x 2.64	Opaque	125 x 125 4.92 x 4.92	Q1313PE	98 x 98 3.86 x 3.86	110 x 110 4.33 x 4.33	61 2.40	25 0.98	90 3.54	75 2.95	90 3.54
Q13138PCECC	119 x 119 x 67 4.69 x 4.69 x 2.64	Clear	125 x 125 4.92 x 4.92	Q1313PE	98 x 98 3.86 x 3.86	110 x 110 4.33 x 4.33	61 2.40	25 0.98	90 3.54	75 2.95	90 3.54
Q18138PCE	169 x 119 x 67 6.65 x 4.69 x 2.64	Opaque	175 x 125 6.89 x 4.92	Q1813PE	148 x 98 5.83 x 3.86	160 x 110 6.30 x 4.33	61 2.40	25 0.98	90 3.54	100 3.94	140 5.51
Q18138PCECC	169 x 119 x 67 6.65 x 4.69 x 2.64	Clear	175 x 125 6.89 x 4.92	Q1813PE	148 x 98 5.83 x 3.86	160 x 110 6.30 x 4.33	61 2.40	25 0.98	90 3.54	100 3.94	140 5.51
Q18188PCE	169 x 169 x 67 6.65 x 6.65 x 2.64	Opaque	175 x 175 6.89 x 6.89	Q1818PE	148 x 148 5.83 x 5.83	160 x 160 6.30 x 6.30	61 2.40	25 0.98	140 5.51	125 4.92	140 5.51
Q18188PCECC	169 x 169 x 67 6.65 x 6.65 x 2.64	Clear	175 x 175 6.89 x 6.89	Q1818PE	148 x 148 5.83 x 5.83	160 x 160 6.30 x 6.30	61 2.40	25 0.98	140 5.51	125 4.92	140 5.51
Q25188PCE	244 x 169 x 67 9.61 x 6.65 x 2.64	Opaque	250 x 175 9.84 x 6.89	Q2518PE	223 x 148 8.78 x 5.83	235 x 160 9.25 x 6.30	61 2.40	25 0.98	139 5.47	202 7.95	215 8.46
Q25188PCECC	244 x 169 x 67 9.61 x 6.65 x 2.64	Clear	250 x 175 9.84 x 6.89	Q2518PE	223 x 148 8.78 x 5.83	235 x 160 9.25 x 6.30	61 2.40	25 0.98	139 5.47	202 7.95	215 8.46
Q13810PCE	119 x 69 x 92 4.69 x 2.72 x 3.62	Opaque	125 x 75 4.92 x 2.95	Q138PE	98 x 48 3.86 x 1.89	110 x 60 4.33 x 2.36	86 3.39	50 1.97	40 1.57	75 2.95	90 3.54
Q13810PCECC	119 x 69 x 92 4.69 x 2.72 x 3.62	Clear	125 x 75 4.92 x 2.95	Q138PE	98 x 48 3.86 x 1.89	110 x 60 4.33 x 2.36	86 3.39	50 1.97	40 1.57	75 2.95	90 3.54
Q131310PCE	119 x 119 x 92 4.69 x 4.69 x 3.62	Opaque	125 x 125 4.92 x 4.92	Q1313PE	98 x 98 3.86 x 3.86	110 x 110 4.33 x 4.33	86 3.39	50 1.97	90 3.54	75 2.95	90 3.54
Q131310PCECC	119 x 119 x 92 4.69 x 4.69 x 3.62	Clear	125 x 125 4.92 x 4.92	Q1313PE	98 x 98 3.86 x 3.86	110 x 110 4.33 x 4.33	86 3.39	50 1.97	90 3.54	75 2.95	90 3.54
Q181310PCE	169 x 119 x 92 6.65 x 4.69 x 3.62	Opaque	175 x 125 6.89 x 4.92	Q1813PE	148 x 98 5.83 x 3.86	160 x 110 6.30 x 4.33	86 3.39	50 1.97	90 3.54	100 3.94	140 5.51
Q181310PCECC	169 x 119 x 92 6.65 x 4.69 x 3.62	Clear	175 x 125 6.89 x 4.92	Q1813PE	148 x 98 5.83 x 3.86	160 x 110 6.30 x 4.33	86 3.39	50 1.97	90 3.54	100 3.94	140 5.51
Q181810PCE	169 x 169 x 92 6.65 x 6.65 x 3.62	Opaque	175 x 175 6.89 x 6.89	Q1818PE	148 x 148 5.83 x 5.83	160 x 160 6.30 x 6.30	86 3.39	50 1.97	140 5.51	125 4.92	140 5.51
Q181810PCECC	169 x 169 x 92 6.65 x 6.65 x 3.62	Clear	175 x 175 6.89 x 6.89	Q1818PE	148 x 148 5.83 x 5.83	160 x 160 6.30 x 6.30	86 3.39	50 1.97	140 5.51	125 4.92	140 5.51
Q251810PCE	244 x 169 x 92 9.61 x 6.65 x 3.62	Opaque	250 x 175 9.84 x 6.89	Q2518PE	223 x 148 8.78 x 5.83	235 x 160 9.25 x 6.30	86 3.39	50 1.97	139 5.47	202 7.95	215 8.46
Q251810PCECC	244 x 169 x 92 9.61 x 6.65 x 3.62	Clear	250 x 175 9.84 x 6.89	Q2518PE	223 x 148 8.78 x 5.83	235 x 160 9.25 x 6.30	86 3.39	50 1.97	139 5.47	202 7.95	215 8.46
Q13813PCE	119 x 69 x 117 4.69 x 2.72 x 4.61	Opaque	125 x 75 4.92 x 2.95	Q138PE	98 x 48 3.86 x 1.89	110 x 60 4.33 x 2.36	111 4.37	75 2.95	40 1.57	75 2.95	90 3.54
Q13813PCECC	119 x 69 x 117 4.69 x 2.72 x 4.61	Clear	125 x 75 4.92 x 2.95	Q138PE	98 x 48 3.86 x 1.89	110 x 60 4.33 x 2.36	111 4.37	75 2.95	40 1.57	75 2.95	90 3.54
Q131313PCE	119 x 119 x 117 4.69 x 4.69 x 4.61	Opaque	125 x 125 4.92 x 4.92	Q1313PE	98 x 98 3.86 x 3.86	110 x 110 4.33 x 4.33	111 4.37	75 2.95	90 3.54	75 2.95	90 3.54
Q131313PCECC	119 x 119 x 117 4.69 x 4.69 x 4.61	Clear	125 x 125 4.92 x 4.92	Q1313PE	98 x 98 3.86 x 3.86	110 x 110 4.33 x 4.33	111 4.37	75 2.95	90 3.54	75 2.95	90 3.54
Q181313PCE	169 x 119 x 117 6.65 x 4.69 x 4.61	Opaque	175 x 125 6.89 x 4.92	Q1813PE	148 x 98 5.83 x 3.86	160 x 110 6.30 x 4.33	111 4.37	75 2.95	90 3.54	100 3.94	140 5.51
Q181313PCECC	169 x 119 x 117 6.65 x 4.69 x 4.61	Clear	175 x 125 6.89 x 4.92	Q1813PE	148 x 98 5.83 x 3.86	160 x 110 6.30 x 4.33	111 4.37	75 2.95	90 3.54	100 3.94	140 5.51
Q181813PCE	169 x 169 x 117 6.65 x 6.65 x 4.61	Opaque	175 x 175 6.89 x 6.89	Q1818PE	148 x 148 5.83 x 5.83	160 x 160 6.30 x 6.30	111 4.37	75 2.95	140 5.51	125 4.92	140 5.51
Q181813PCECC	169 x 169 x 117 6.65 x 6.65 x 4.61	Clear	175 x 175 6.89 x 6.89	Q1818PE	148 x 148 5.83 x 5.83	160 x 160 6.30 x 6.30	111 4.37	75 2.95	140 5.51	125 4.92	140 5.51
Q181315PCE	169 x 119 x 142 6.65 x 4.69 x 5.59	Opaque	175 x 125 6.89 x 4.92	Q1813PE	148 x 98 5.83 x 3.86	160 x 110 6.30 x 4.33	136 5.35	100 3.94	90 3.54	100 3.94	140 5.51
Q181315PCECC	169 x 119 x 142 6.65 x 4.69 x 5.59	Clear	175 x 125 6.89 x 4.92	Q1813PE	148 x 98 5.83 x 3.86	160 x 110 6.30 x 4.33	136 5.35	100 3.94	90 3.54	100 3.94	140 5.51
Q181815PCE	169 x 169 x 142 6.65 x 6.65 x 5.59	Opaque	175 x 175 6.89 x 6.89	Q1818PE	148 x 148 5.83 x 5.83	160 x 160 6.30 x 6.30	136 5.35	100 3.94	140 5.51	125 4.92	140 5.51
Q181815PCECC	169 x 169 x 142 6.65 x 6.65 x 5.59	Clear	175 x 175 6.89 x 6.89	Q1818PE	148 x 148 5.83 x 5.83	160 x 160 6.30 x 6.30	136 5.35	100 3.94	140 5.51	125 4.92	140 5.51
Q251815PCE	244 x 169 x 142 9.61 x 6.65 x 5.59	Opaque	250 x 175 9.84 x 6.89	Q2518PE	223 x 148 8.78 x 5.83	235 x 160 9.25 x 6.30	136 5.35	100 3.94	139 5.47	202 7.95	215 8.46
Q251815PCECC	244 x 169 x 142 9.61 x 6.65 x 5.59	Clear	250 x 175 9.84 x 6.89	Q2518PE	223 x 148 8.78 x 5.83	235 x 160 9.25 x 6.30	136 5.35	100 3.94	139 5.47	202 7.95	215 8.46

A x B x C are internal dimensions.

Purchase panels separately.

Standard Product **ABS**

Catalog Number	AxBxC mm/in.	Cover Style	External Dimensions L x W mm/in.	Panel	Panel Size D x E mm/in.	Mounting G x H mm/in.	F mm/in.	K mm/in.	P mm/in.	Q mm/in.	S mm/in.
Q1388ABE	119 x 69 x 67 4.69 x 2.72 x 2.64	Opaque	125 x 75 4.92 x 2.95	Q138PE	98 x 48 3.86 x 1.89	110 x 60 4.33 x 2.36	61 2.40	25 .98	40 1.57	75 2.95	90 3.54
Q1388ABECC	119 x 69 x 67 4.69 x 2.72 x 2.64	Clear	125 x 75 4.92 x 2.95	Q138PE	98 x 48 3.86 x 1.89	110 x 60 4.33 x 2.36	61 2.40	25 .98	40 1.57	75 2.95	90 3.54
Q13138ABE	119 x 119 x 67 4.69 x 4.69 x 2.64	Opaque	125 x 125 4.92 x 4.92	Q1313PE	98 x 98 3.86 x 3.86	110 x 110 4.33 x 4.33	61 2.40	25 .98	90 3.54	75 2.95	90 3.54
Q13138ABECC	119 x 119 x 67 4.69 x 4.69 x 2.64	Clear	125 x 125 4.92 x 4.92	Q1313PE	98 x 98 3.86 x 3.86	110 x 110 4.33 x 4.33	61 2.40	25 .98	90 3.54	75 2.95	90 3.54
Q18138ABE	169 x 119 x 67 6.65 x 4.69 x 2.64	Opaque	175 x 125 6.89 x 4.92	Q1813PE	148 x 98 5.83 x 3.86	160 x 110 6.30 x 4.33	61 2.40	25 .98	90 3.54	100 3.94	140 5.51
Q18138ABECC	169 x 119 x 67 6.65 x 4.69 x 2.64	Clear	175 x 125 6.89 x 4.92	Q1813PE	148 x 98 5.83 x 3.86	160 x 110 6.30 x 4.33	61 2.40	25 .98	90 3.54	100 3.94	140 5.51
Q18188ABE	169 x 169 x 67 6.65 x 6.65 x 2.64	Opaque	175 x 175 6.89 x 6.89	Q1818PE	148 x 148 5.83 x 5.83	160 x 160 6.30 x 6.30	61 2.40	25 .98	140 5.51	125 4.92	140 5.51
Q18188ABECC	169 x 169 x 67 6.65 x 6.65 x 2.64	Clear	175 x 175 6.89 x 6.89	Q1818PE	148 x 148 5.83 x 5.83	160 x 160 6.30 x 6.30	61 2.40	25 .98	140 5.51	125 4.92	140 5.51
Q25188ABE	244 x 169 x 67 9.61 x 6.65 x 2.64	Opaque	250 x 175 9.84 x 6.89	Q2518PE	223 x 148 8.78 x 5.83	235 x 160 9.25 x 6.30	61 2.40	25 .98	139 5.47	202 7.95	215 8.46
Q25188ABECC	244 x 169 x 67 9.61 x 6.65 x 2.64	Clear	250 x 175 9.84 x 6.89	Q2518PE	223 x 148 8.78 x 5.83	235 x 160 9.25 x 6.30	61 2.40	25 .98	139 5.47	202 7.95	215 8.46
Q13810ABE	119 x 69 x 92 4.69 x 2.72 x 3.62	Opaque	125 x 75 4.92 x 2.95	Q138PE	98 x 48 3.86 x 1.89	110 x 60 4.33 x 2.36	86 3.39	50 1.97	40 1.57	75 2.95	90 3.54
Q13810ABECC	119 x 69 x 92 4.69 x 2.72 x 3.62	Clear	125 x 75 4.92 x 2.95	Q138PE	98 x 48 3.86 x 1.89	110 x 60 4.33 x 2.36	86 3.39	50 1.97	40 1.57	75 2.95	90 3.54
Q131310ABE	119 x 119 x 92 4.69 x 4.69 x 3.62	Opaque	125 x 125 4.92 x 4.92	Q1313PE	98 x 98 3.86 x 3.86	110 x 110 4.33 x 4.33	86 3.39	50 1.97	90 3.54	75 2.95	90 3.54
Q131310ABECC	119 x 119 x 92 4.69 x 4.69 x 3.62	Clear	125 x 125 4.92 x 4.92	Q1313PE	98 x 98 3.86 x 3.86	110 x 110 4.33 x 4.33	86 3.39	50 1.97	90 3.54	75 2.95	90 3.54
Q181310ABE	169 x 119 x 92 6.65 x 4.69 x 3.62	Opaque	175 x 125 6.89 x 4.92	Q1813PE	148 x 98 5.83 x 3.86	160 x 110 6.30 x 4.33	86 3.39	50 1.97	90 3.54	100 3.94	140 5.51
Q181310ABECC	169 x 119 x 92 6.65 x 4.69 x 3.62	Clear	175 x 125 6.89 x 4.92	Q1813PE	148 x 98 5.83 x 3.86	160 x 110 6.30 x 4.33	86 3.39	50 1.97	90 3.54	100 3.94	140 5.51
Q181810ABE	169 x 169 x 92 6.65 x 6.65 x 3.62	Opaque	175 x 175 6.89 x 6.89	Q1818PE	148 x 148 5.83 x 5.83	5.83 x 5.83 6.30 x 6.30	86 3.39	50 1.97	140 5.51	125 4.92	140 5.51
Q181810ABECC	169 x 169 x 92 6.65 x 6.65 x 3.62	Clear	175 x 175 6.89 x 6.89	Q1818PE	148 x 148 5.83 x 5.83	5.83 x 5.83 6.30 x 6.30	86 3.39	50 1.97	140 5.51	125 4.92	140 5.51
Q251810ABE	244 x 169 x 92 9.61 x 6.65 x 3.62	Opaque	250 x 175 9.84 x 6.89	Q2518PE	223 x 148 8.78 x 5.83	235 x 160 9.25 x 6.30	86 3.39	50 1.97	139 5.47	202 7.95	215 8.46
Q251810ABECC	244 x 169 x 92 9.61 x 6.65 x 3.62	Clear	250 x 175 9.84 x 6.89	Q2518PE	223 x 148 8.78 x 5.83	235 x 160 9.25 x 6.30	86 3.39	50 1.97	139 5.47	202 7.95	215 8.46
Q13813ABE	119 x 69 x 117 4.69 x 2.72 x 4.61	Opaque	125 x 75 4.92 x 2.95	Q138PE	98 x 48 3.86 x 1.89	110 x 60 4.33 x 2.36	111 4.37	75 2.95	40 1.57	75 2.95	90 3.54
Q13813ABECC	119 x 69 x 117 4.69 x 2.72 x 4.61	Clear	125 x 75 4.92 x 2.95	Q138PE	98 x 48 3.86 x 1.89	110 x 60 4.33 x 2.36	111 4.37	75 2.95	40 1.57	75 2.95	90 3.54
Q131313ABE	119 x 119 x 117 4.69 x 4.69 x 4.61	Opaque	125 x 125 4.92 x 4.92	Q1313PE	98 x 98 3.86 x 3.86	110 x 110 4.33 x 4.33	111 4.37	75 2.95	90 3.54	75 2.95	90 3.54
Q131313ABECC	119 x 119 x 117 4.69 x 4.69 x 4.61	Clear	125 x 125 4.92 x 4.92	Q1313PE	98 x 98 3.86 x 3.86	110 x 110 4.33 x 4.33	111 4.37	75 2.95	90 3.54	75 2.95	90 3.54
Q181313ABE	169 x 119 x 117 6.65 x 4.69 x 4.61	Opaque	175 x 125 6.89 x 4.92	Q1813PE	148 x 98 5.83 x 3.86	160 x 110 6.30 x 4.33	111 4.37	75 2.95	90 3.54	100 3.94	140 5.51
Q181313ABECC	169 x 119 x 117 6.65 x 4.69 x 4.61	Clear	175 x 125 6.89 x 4.92	Q1813PE	148 x 98 5.83 x 3.86	160 x 110 6.30 x 4.33	111 4.37	75 2.95	90 3.54	100 3.94	140 5.51
Q181813ABE	169 x 169 x 117 6.65 x 6.65 x 4.61	Opaque	175 x 175 6.89 x 6.89	Q1818PE	148 x 148 5.83 x 5.83	160 x 160 6.30 x 6.30	111 4.37	75 2.95	140 5.51	125 4.92	140 5.51
Q181813ABECC	169 x 169 x 117 6.65 x 6.65 x 4.61	Clear	175 x 175 6.89 x 6.89	Q1818PE	148 x 148 5.83 x 5.83	160 x 160 6.30 x 6.30	111 4.37	75 2.95	140 5.51	125 4.92	140 5.51
Q181315ABE	169 x 119 x 142 6.65 x 4.69 x 5.59	Opaque	175 x 125 6.89 x 4.92	Q1813PE	148 x 98 5.83 x 3.86	160 x 110 6.30 x 4.33	136 5.35	100 3.94	90 3.54	100 3.94	140 5.51
Q181315ABECC	169 x 119 x 142 6.65 x 4.69 x 5.59	Clear	175 x 125 6.89 x 4.92	Q1813PE	148 x 98 5.83 x 3.86	160 x 110 6.30 x 4.33	136 5.35	100 3.94	90 3.54	100 3.94	140 5.51
Q181815ABE	169 x 169 x 142 6.65 x 6.65 x 5.59	Opaque	175 x 175 6.89 x 6.89	Q1818PE	148 x 148 5.83 x 5.83	160 x 160 6.30 x 6.30	136 5.35	100 3.94	140 5.51	125 4.92	140 5.51
Q181815ABECC	169 x 169 x 142 6.65 x 6.65 x 5.59	Clear	175 x 175 6.89 x 6.89	Q1818PE	148 x 148 5.83 x 5.83	160 x 160 6.30 x 6.30	136 5.35	100 3.94	140 5.51	125 4.92	140 5.51
Q251815ABE	244 x 169 x 142 9.61 x 6.65 x 5.59	Opaque	250 x 175 9.84 x 6.89	Q2518PE	223 x 148 8.78 x 5.83	235 x 160 9.25 x 6.30	136 5.35	100 3.94	139 5.47	202 7.95	215 8.46
Q251815ABECC	244 x 169 x 142 9.61 x 6.65 x 5.59	Clear	250 x 175 9.84 x 6.89	Q2518PE	223 x 148 8.78 x 5.83	235 x 160 9.25 x 6.30	136 5.35	100 3.94	139 5.47	202 7.95	215 8.46

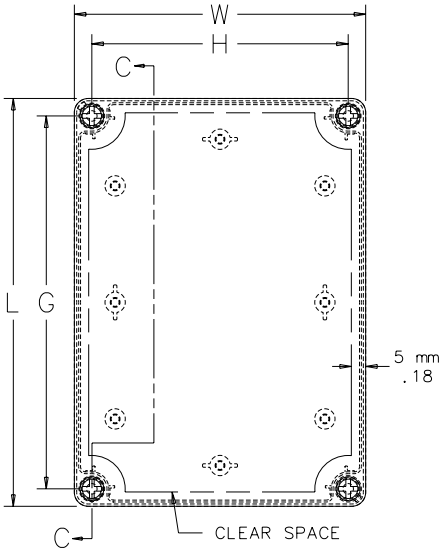

TOP VIEW

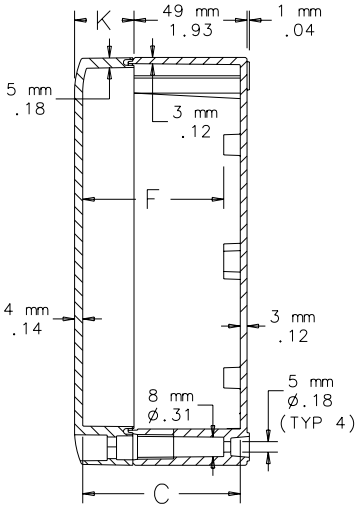

SECTION C-C

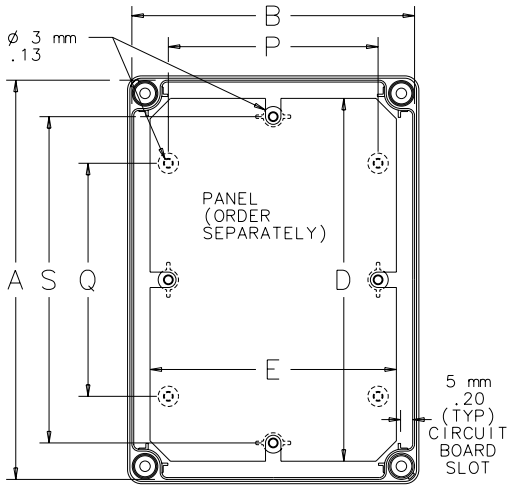

TOP VIEW WITH COVER REMOVED

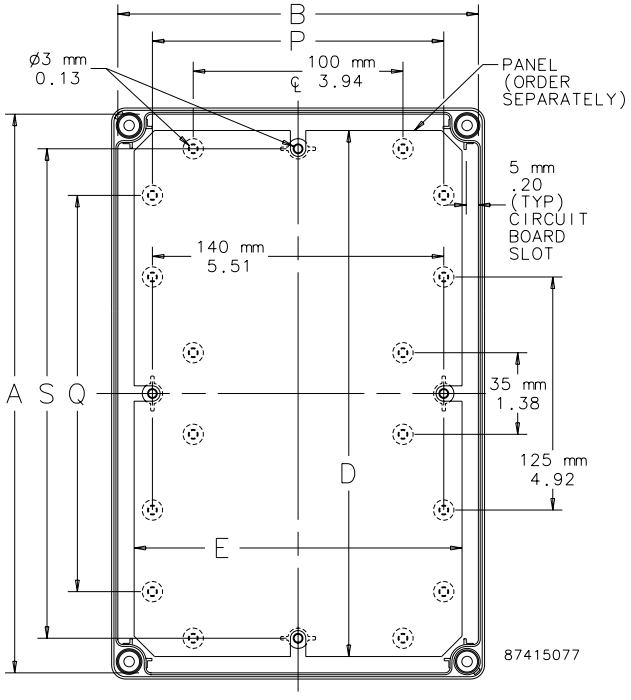

TOP VIEW WITH COVER REMOVED (WHEN L=250)

BRASS INSERTS

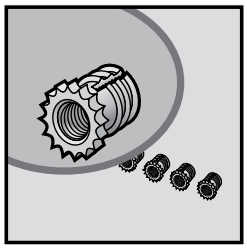

Self-tapping Brass Inserts fit into molded pads in the bottom of the enclosure. Inserts have an M2 internal machine screw thread and M4 self-tapping external thread.

BULLETIN: Q41Y

Catalog Number	Description	Qty. Pkg.
QEBI	M2 thread inserts	4

HINGE KIT

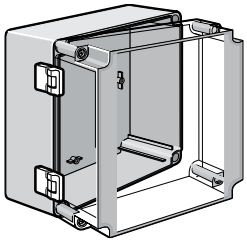

Includes two polyamid hinges, eight M4 self-tapping zinc-plated screws, eight flat washers and drilling template. Use on all QLINE™ E enclosures.
Kit might not meet Type 4 requirements and should, therefore, be verified by customer.

BULLETIN: Q41Y

Catalog Number
QDEHK

MOUNTING BRACKET KIT

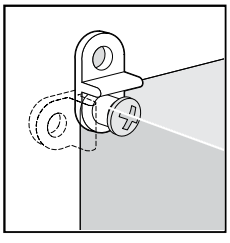

Kit includes four polycarbonate brackets and four M4 self-tapping, plated screws. Use on all QLINE™ E enclosures. No modification to the enclosure is required for installation. Maintains listed ratings.

BULLETIN: Q41Y

Catalog Number
QEMFK

HARDWARE KIT

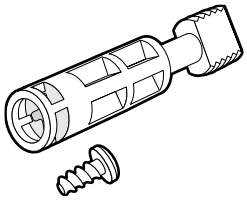

Four cross-point polyamide cover screws and four self-tapping plated screws used to mount optional panels, rails and other components. This kit is offered as a replacement kit for lost or damaged hardware originally furnished with the enclosure.

BULLETIN: Q41Y

Catalog Number	Description	Fits QLINE Enclosure
QEHK35	35-mm screw	when C = 67 mm, 117 mm or 142 mm
QEHK60	60-mm screw	when C = 92 mm

PANELS

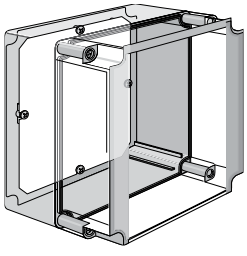

BULLETIN: Q41Y

Catalog Number	Panel Size D x E mm/in.
Q138PE	98 x 48 3.86 x 1.89
Q1313PE	98 x 98 3.86 x 3.86
Q1813PE	148 x 98 5.83 x 3.86
Q1818PE	148 x 148 5.83 x 5.83
Q2518PE	223 x 148 8.78 x 5.83

Notes