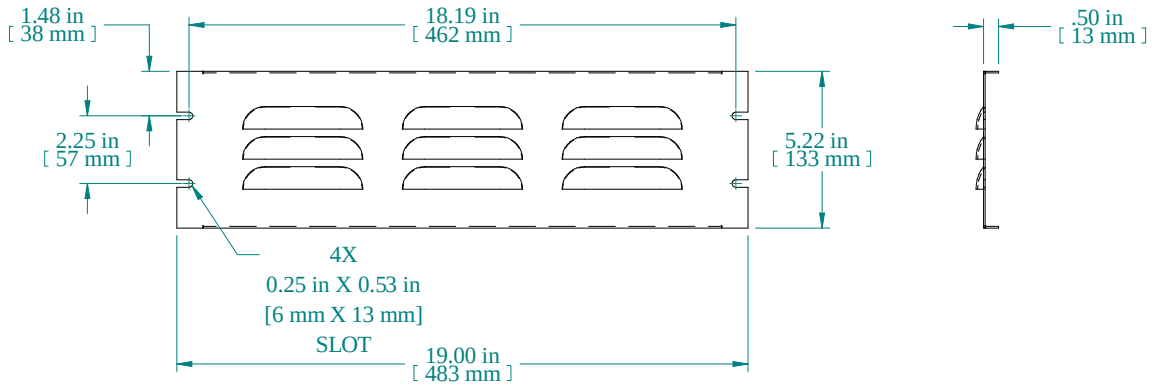

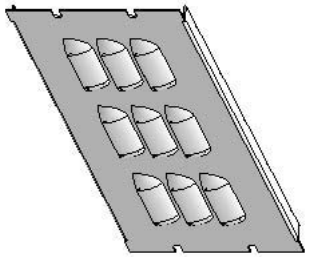

PART NUMBERS	
PVLL19005BK2	PAINTED BLACK (SEMI-GLOSS)
PVLL19005CG2	PAINTED RAL7032 GRAY (SEMI-GLOSS)

NOTES
Material: 16 ga. Steel (0.057").
Mounting hardware not included.
Ventilated Louver Panel

Data subject to change without notice. Isometric drawing not to scale.

HAMMOND MANUFACTURING™

www.hammondmfg.com

PART NO. PVLL19005