Monitoring Relays
1-Phase AC/DC Over Voltage - AC Over Current
Types DUA01, PUA01


DUA01


PUA01

- **AC/DC over voltage monitoring relay**
- **Selection of measuring range by DIP-switches**
- **Measuring ranges: 2 to 20 VAC/DC, 5 to 50 VAC/DC, 20 to 200 VAC/DC, 50 to 500 VAC/DC, 0.4 to 4 V_p AC**
- **Adjustable voltage limit on relative scale**
- **Adjustable hysteresis**
- **Programmable latching at set level**
- **Output: 8 A SPDT relay normally de-energized**
- **For mounting on DIN-rail in accordance with DIN/EN 50 022 (DUA01) or plug-in module (PUA01)**
- **22.5 mm Euronorm housing (DUA01) or 36 mm plug-in module (PUA01)**
- **LED indication for relay and power supply ON**
- **Galvanically separated power supply**

Product Description

DUA01 and PUA01 are precise AC/DC over voltage monitoring relays. They can also be used as 1-phase or 3-phase over current monitoring relays when connected with MI or MP current transformers.
Owing to the built-in latch function, the ON-position of the relay output can be maintained.
The red LED indicates the alarm status.

Ordering Key

DUA 01 C B23 500V

- **Housing**
- **Function**
- **Type**
- **Item number**
- **Output**
- **Power supply**
- **Range**

Type Selection

Mounting	Output	Supply: 24 to 48 VAC/DC	Supply: 115/230 VAC
DIN-rail	SPDT	**DUA 01 C D48 500V**	**DUA 01 C B23 500V**
Plug-in	SPDT	**PUA 01 C D48 500V**	**PUA 01 C B23 500V**

Input Specifications

Input (voltage level)			
DUA01		Terminals Y1, Y2	
PUA01		Terminals 5, 7	
Measuring ranges			
Direct		**Int. resist.**	**Max. volt.**
Selectable by DIP-switches			
2 to 20 VAC/DC		> 500 kΩ	600 V
5 to 50 VAC/DC		> 500 kΩ	600 V
20 to 200 VAC/DC		> 500 kΩ	600 V
50 to 500 VAC/DC		> 500 kΩ	600 V
0.4 to 4 V_p AC		> 500 kΩ	600 V
Max. voltage for 1 s			1000 V
MI and MP CT ranges		**AAC rms**	**Max. curr.**
1-ph.:	3-ph.:		
MI 5	MP 3005	0.5 to 5 A	20 AAC
MI 20	MP 3020	2 to 20 A	50 AAC
MI 100	MP 3100	10 to 100 A	250 AAC
MI 500	MP 3500	50 to 500 A	750 AAC
Note: The input voltage cannot raise over 300 VAC/DC with respect to ground (PUA01 only)			
Contact input			
DUA01		Terminals Z1, Y1	
PUA01		Terminals 8, 9	
Disabled		> 10 kΩ	
Enabled		< 500 Ω	
Latch disable		> 500 ms	

Output Specifications

Output		SPDT relay
Rated insulation voltage		250 VAC
Contact ratings ($AgSnO_2$)		μ
Resistive loads	AC 1	8 A @ 250 VAC
	DC 12	5 A @ 24 VDC
Small inductive loads	AC 15	2.5 A @ 250 VAC
	DC 13	2.5 A @ 24 VDC
Mechanical life		≥ 30 x 10^6 operations
Electrical life		≥ 10^5 operations (at 8 A, 250 V, cos φ = 1)
Operating frequency		≤ 7200 operations/h
Dielectric strength		
Dielectric voltage		≥ 2 kVAC (rms)
Rated impulse withstand volt.		4 kV (1.2/50 μs)

Supply Specifications

Power supply		Overvoltage cat. III (IEC 60664, IEC 60038)
Rated operational voltage through terminals:		
A1, A2 or A3, A2	(DUA01)	
2, 10 or 11, 10	(PUA01)	
	D48:	24 to 48 VAC/DC ± 15% 45 to 65 Hz, insulated
	B23:	115/230 VAC ± 15% 45 to 65 Hz, insulated

Dielectric voltage	**DC supply**	**AC supply**
Supply to input	2 kV	4 kV
Supply to output	4 kV	4 kV
Input to output	4 kV	4 kV

Rated operational power	
AC	4 VA
DC	2 W

General Specifications

Reaction time	
Alarm ON delay	< 100 ms (voltage rising from -20% to +20% set value)
Alarm OFF delay	< 300 ms (voltage decreasing from +20% to -20% set value)

General Specifications (cont.)

Accuracy		(15 min warm-up time)
Temperature drift		± 1000 ppm/°C
Repeatability		± 0.5% on full-scale
Indication for		
Power supply ON		LED, green
Output relay ON		LED, red
Environment		(EN 60529)
Degree of protection		IP 20
Pollution degree		3 (DUA01), 2 (PUA01)
Operating temperature		-20 to 60°C, R.H. < 95%
Storage temperature		-30 to 80°C, R.H. < 95%
Housing		
Dimensions	DUA01	22.5 x 80 x 99.5 mm
	PUA01	36 x 80 x 94 mm
Material		PA66 or Noryl
Weight		Approx. 150 g
Screw terminals		
Tightening torque		Max. 0.5 Nm acc. to IEC 60947
Product standard		EN 60255-6
Approvals		UL, CSA
CE Marking		L.V. Directive 2006/95/EC EMC Directive 2004/108/EC
EMC		
Immunity		According to EN 60255-26 According to EN 61000-6-2
Emissions		According to EN 60255-26 According to EN 61000-6-3

Mode of Operation

DUA01 and PUA01 monitor both AC and DC over voltage. When connected with MI or MP current transformer (using the 0.4 - 4 V_p range) they can monitor 1-phase or 3-phase AC currents up to 500 A.

Example 1
(connection between terminals Z1, Y1 or 8, 9 - latch function enabled)
The relay operates and latches in operating position when the measured value exceeds the set level. Provided that the voltage has dropped min. 4% below the set point (see hysteresis), the relay releases when the interconnection between terminals Z1, Y1 or 8, 9 is interrupted or the power supply is interrupted as well.

Example 2 (MI CT)
(no connection between terminals Z1, Y1 or 8, 9)
The relay operates when the current flowing through the CT exceeds the set level. It releases when the current drops min. 4% below the set level (see hysteresis) or when power supply is interrupted.

Example 3 (MP CT)
(no connection between terminals Z1, Y1 or 8, 9 - latch function disabled)
The relay operates when the maximum current flowing through the CT exceeds the set level. It releases when the maximum current drops min. 4% below the set level (see hysteresis) or when power supply is interrupted.

Range - Level Setting

Adjust the measuring range setting the DIP switches 1 to 4 as shown below.
To access the DIP switches open the grey plastic cover using a screwdriver as shown below.

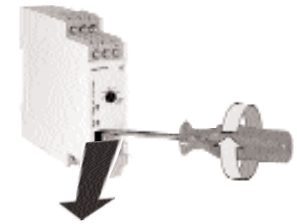

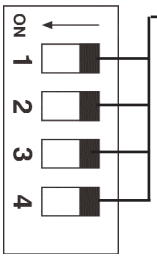

Measuring range	
OFF ON OFF OFF	0.4 to 4 V_p
ON OFF OFF OFF	2 to 20 VAC/DC
OFF OFF OFF OFF	5 to 50 VAC/DC
ON OFF ON OFF	20 to 200 VAC/DC
ON OFF OFF ON	50 to 500 VAC/DC

Centre knob:
Setting of voltage on relative scale: from 10 to 110% of the full-scale value.

Hysteresis:
Approx. 4% of set value, it can be extended by inserting a resistor between terminals Z1, Y1 or 8, 9.

Approx. resistor values:
10%: 180 kΩ
25%: 47 kΩ
50%: 22 kΩ
75%: 15 kΩ
Latch: < 500 Ω

Operation Diagrams

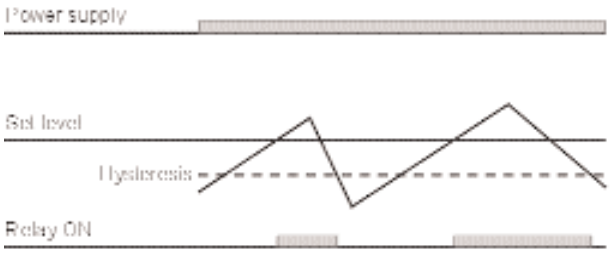

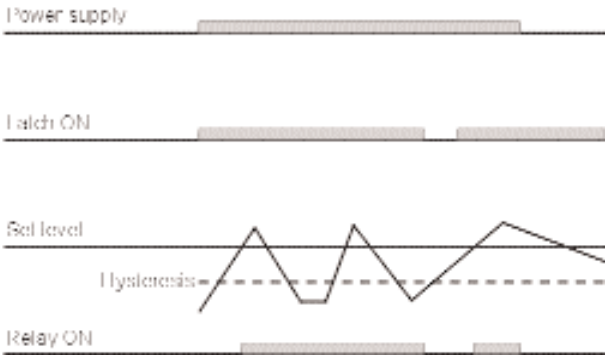

Wiring Diagrams

Example 1

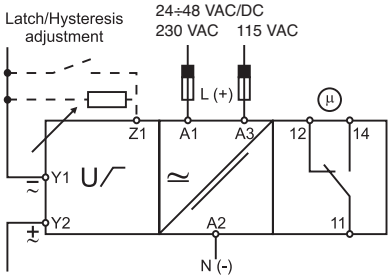

Example 2

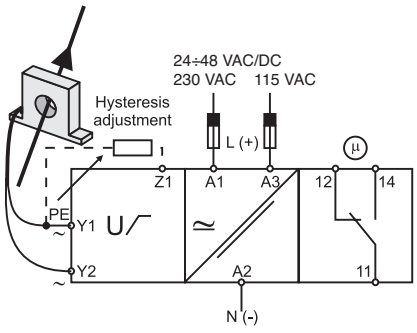

Example 3

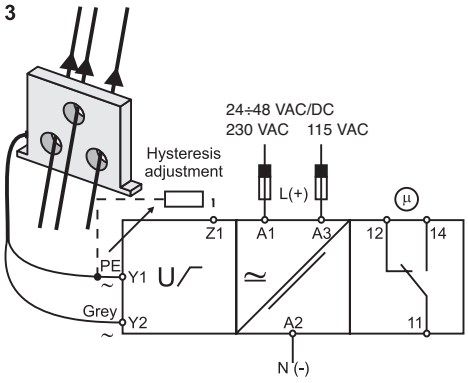

DUA01

Example 1

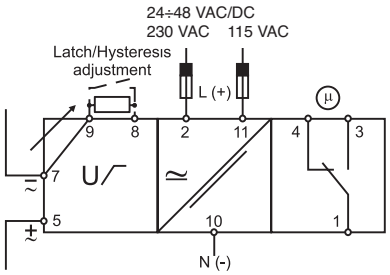

Example 2

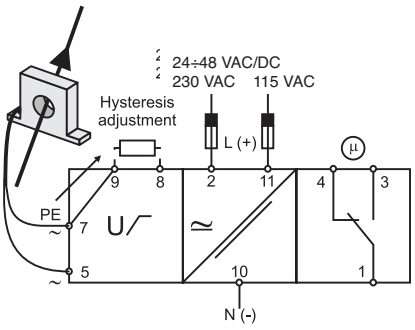

Example 3

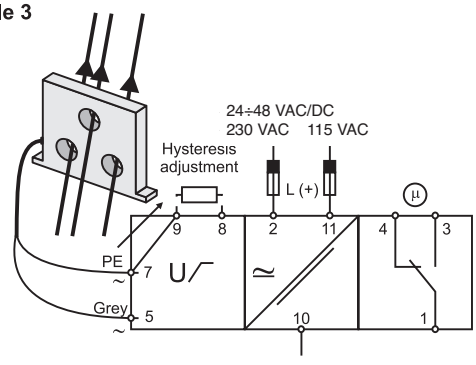

PUA01

Dimensions

DIN-rail

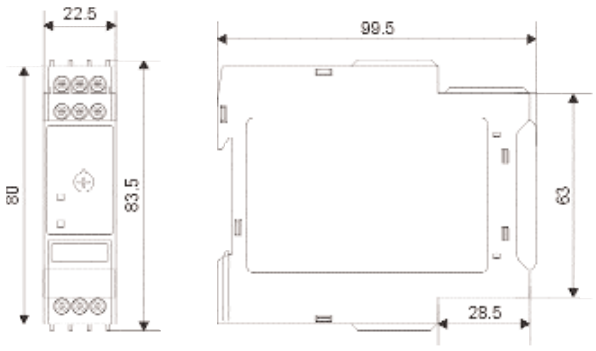

Plug-in

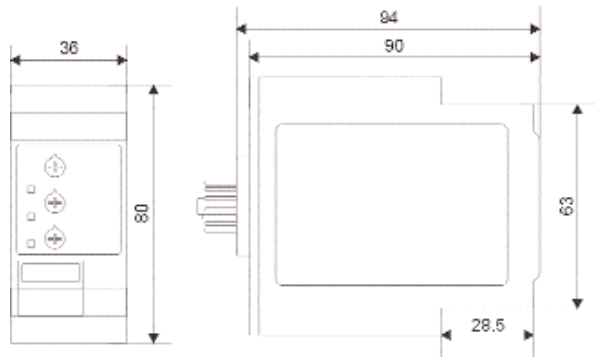

Mouser Electronics

Authorized Distributor

Click to View Pricing, Inventory, Delivery & Lifecycle Information:

Carlo Gavazzi:

DUA01CD48500V PUA01CD48500V PUA01CB23500V DUA01CB23500V