Sensata Technologies



KLIXON® | PS Neck Mounting Series (PSM-XX-N)

2 to 35 Amp Precision Thermal Circuit Breaker

FEATURES

- 30VDC, 2 to 35 Amps
- Manual reset neck mount circuit breaker

DESCRIPTION

The KLIXON® PSM-XX-N series of breakers are designed to interrupt short circuits or overloads and combines trip-free protection with fast response time. The PSM-XX-N series thermal breaker is ideal for commercial and military vehicle equipment where precise ultimate trip characteristics are required.

ORDERING INFORMATION

X – X – N

Configuration
PSM = Manual, sealed

Amp Rating
(2, 3, 4, 5, 6, 8, 10, 12.5, 15
17.5, 20, 25, 30, 35)

Neck Mount
N = neck mount

PERFORMANCE CHARACTERISTICS

Calibration : 200% rated current, 77°F (25°C)	2 to 10 amps : 20 to 150 seconds 12.5 to 35 amps : 8 to 50 seconds
Ultimate Trip At 77°F (25°C)	Must hold 100%, Must trip 138%
Endurance	Per SAE J553, 500 cycles @ 200%
Interrupt Current Capacity	Per SAE J553
Vibration	10G MIL-STD-202 Method 204, Condition A
Mechanical Shock	MIL-STD-202, Method 213, Condition C, 100G
Dielectric Strength	MIL-STD-202, Method 301, 1500VAC min
Insulation Resistance	MIL-STD 202, Method 302, Condition B, 100 MΩ min
Weight	PSM-N : 35 grams max

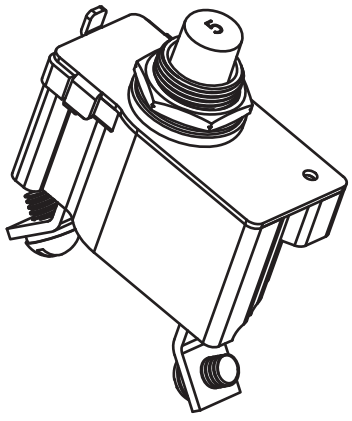

TRIP CURVE - Approximate Time, Current Characteristics At 77°F (25°C)

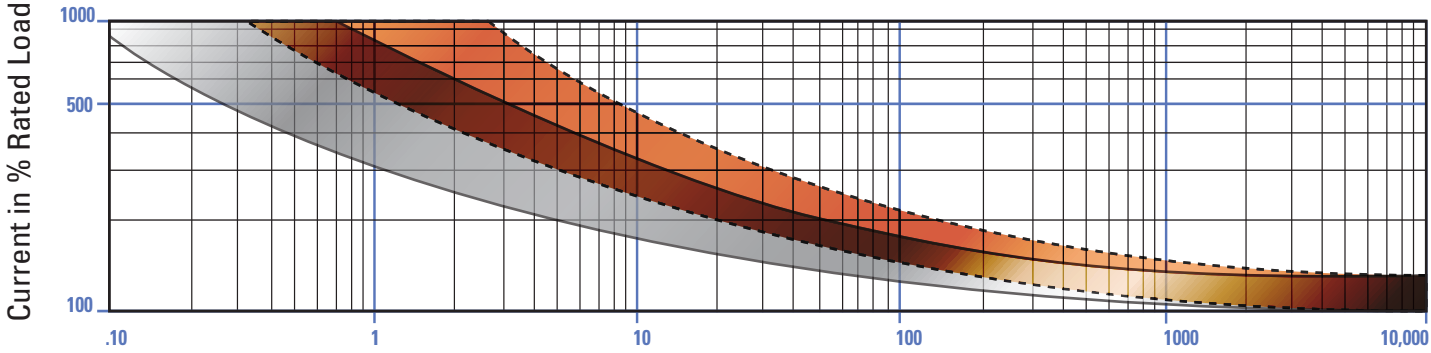

DERATING CURVE

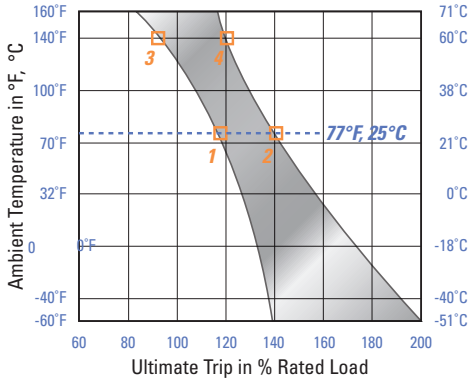

Performance characteristics are based on room temperature (77°F, 25°C). Consult Derating curve for ambient temperatures significantly higher or lower than standard room temperature.

Example: At 77°F (25°C) the device is calibrated to hold at 110% of rated current (1) and trip at 138% of rated current (2). At 140°F (60°C), the same device will hold at approximately 92% of rated current (3), and trip at approximately 120% of rated current (4).

DIMENSIONS - PSM-XX-N (10 amps and less)

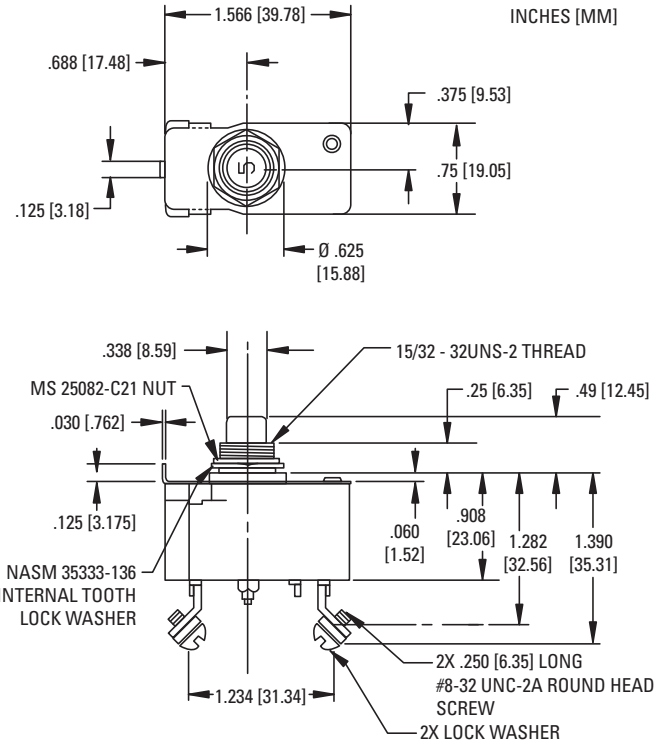

DIMENSIONS - PSM-XX-N (over 10 amps)

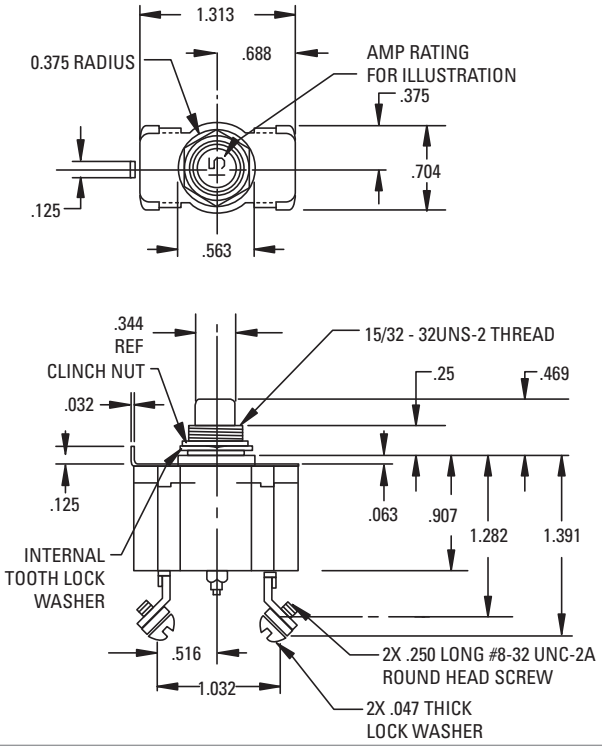

Sensata Technologies

The World Depends on Sensors and Controls

Sensata Technologies Inc.

529 Pleasant Street
Attleboro, MA 02703, USA
Phone: +1 508-236-3287

http://www.sensata.com/

Important Notice: Sensata Technologies (Sensata) reserves the right to make changes to or discontinue any product or service identified in this publication without notice. Sensata advises its customers to obtain the latest version of the relevant information to verify, before placing any orders, that the information being relied upon is current. Sensata assumes no responsibility for infringement of patents or rights of others based on Sensata applications assistance or product specifications since Sensata does not possess full access concerning the use or application of customers' products. Sensata also assumes no responsibility for customers' product designs.