

KLIXON® | PS Series (PSA, PSM)

2 to 35 Amp Precision Thermal Circuit Breaker

FEATURES

- 30VDC, 2 to 35 Amps
- Available in manual and automatic reset options
- PSM meets CID A-A-55571/06 specifications
- PSA meets CID A-A-55571/05 specifications
- UL Recognized E36869

DESCRIPTION

The KLIXON® PS series of breakers are designed to interrupt short circuits or overloads and combines trip-free protection with fast response time. The PS series thermal breaker is ideal for commercial and military vehicle equipment where precise ultimate trip characteristics are required.

ORDERING INFORMATION

X – X

Configuration
PSA = Automatic
PSM = Manual

Amp Rating
(2, 3, 4, 5, 6, 8, 10, 12.5, 15 20, 25, 30, 35)

PERFORMANCE CHARACTERISTICS

Calibration : 200% rated current, 77°F (25°C)	≤10A for 20 to 150 seconds >10A for 8 to 50 seconds
Ultimate Trip At 77°F (25°C)	Must hold 100%, Must trip 138%
Endurance	Automatic: 2,000 cycles @ 200% rated current Manual: 500 cycles @ 200% rated current
Interrupt Current Capacity	Per SAE J553, 600A
Vibration	10G MIL-STD-202 Method 204, Condition A
Mechanical Shock	100G MIL-STD-202 Method 213, Condition C
Dielectric Strength	MIL-STD-202, Method 301, 1500VAC min
Insulation Resistance	MIL-STD-202, Method 302, Condition B, 100 MΩ min
Weight	PSA : 30 grams max PSM : 32 grams max

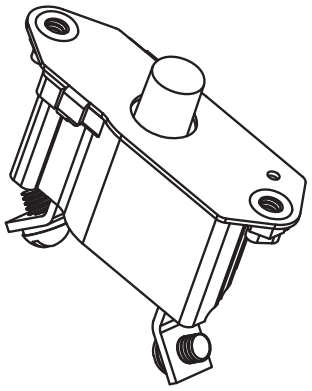

TRIP CURVE - Approximate Time, Current Characteristics At 77°F (25°C)

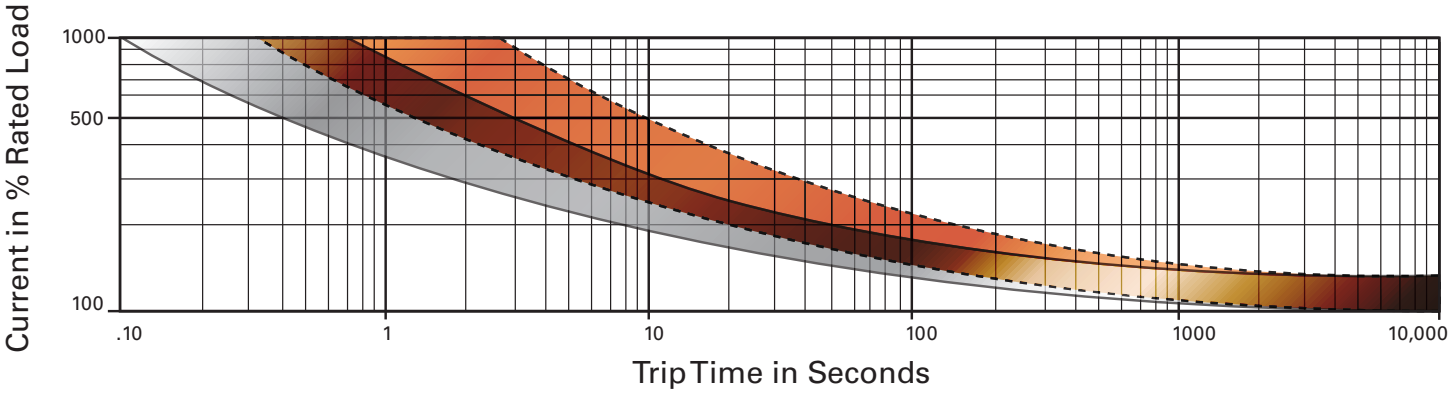

Dotted Lines: 10 amps or below
Solid Lines: Above 10 amps

DIMENSIONS - PSM (10 amps or less)

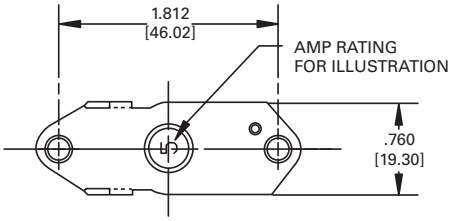

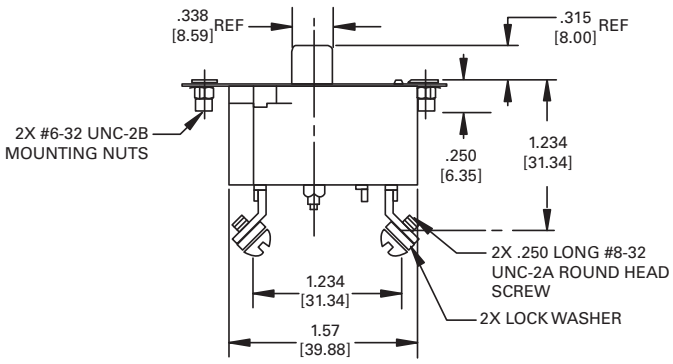

DIMENSIONS - PSM (over 10 amps)

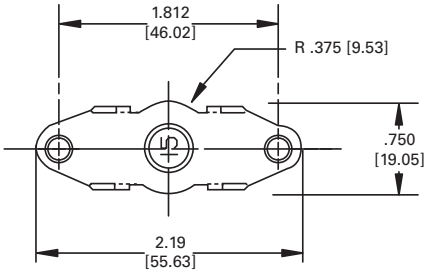

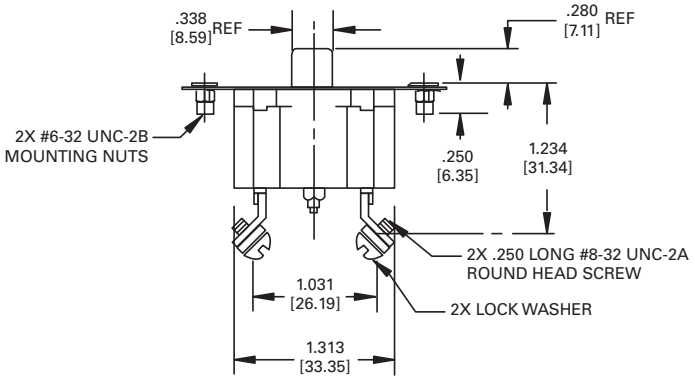

BUSINESS CENTER

http://www.sensata.com/

Sensata Technologies Inc.
529 Pleasant Street
Attleboro, MA 02703, USA
Phone: +1 508-236-3800
Fax: +1 508-236-2349

Sensata Technologies

The World Depends on Sensors and Controls

©2013 Sensata Technologies, Inc. All rights reserved worldwide. Printed in USA, revised April 2013.

Important Notice: Sensata Technologies reserves the right to make changes to, or to discontinue, any product or service identified in this publication without notice. Before placing orders, users should obtain the latest version of the relevant information to verify that the information being relied upon is current.

Sensata Technologies assumes no responsibility for customers' product designs or applications. Users must determine the suitability of the Sensata device described in this publication for their application, including the level of reliability required. Many factors beyond Sensata's control can affect the use and performance of a Sensata product in a particular application, including the conditions under which the product is used and the time and environmental conditions in which the product is expected to perform. As these factors are uniquely within the user's knowledge and control, it is essential that the user evaluate the Sensata product to determine whether it is fit for a particular purpose and suitable for the user's application.

Sensata Technologies products are sold subject to Sensata's Terms and Conditions of Sale which can be found at: www.sensata.com/terms.htm