POC-S195

19" Slim Point-of-Care Terminal with IP54 Standard Compliance



Features

- Point-of-Care terminal for eHealthcare/Medical Applications
- 19" LCD display
- Certified IP54 dust and water-splash proof enclosure with additional IP65 dust-tight front panel
- Low audible noise (Fanless)
- UL60601-1/EN60601-1, CE & FCC Class B certified
- 802.11b/g WLAN module and touchscreen (optional)

Specifications

Computing System	Chipset	Intel 855GME GMCH + ICH4
	CPU	Intel® Pentium® M processor ULV 1.4GHz
	Front Side Bus	400 MHz
	Memory	2 x 184-pin DIMM sockets, supports up to 2 GB DDR2 200/266/333 SDRAM
Graphics	Controller	Intel 855GME integrated
	VRAM	Dynamically shared system memory up to 64 MB
Expansion Slot	Mini PCI	1 x Mini PCI slot, supports type IIIA Mini PCI
Storage	HDD	1 x 2.5" IDE
	Compact Flash	1 x Type I/II
Ethernet	Interface	1 x 10/100Base-T Ethernet interface (RJ-45)
I/O Ports		1 x RS-232 and 1 x RS232/422/485 serial port; 2 x USB ports; 1 x PS/2 mouse and K/B; 1 x D-sub VGA port
Speakers		2 x 1 W speakers; 1 x MIC-in and Speaker-out
Display	Display type	19" TFT LCD
	Max. Resolution	1280 x 1024
	Max. Colors	16.7M
	Dot size (mm)	0.264 x 0.264
	Viewing angle	178/178°
	Luminance	300 cd/m^2
	Contrast ratio	1300 : 1
	LCD MTBF	50,000 hours
	Backlight lifetime	50,000 hours
Power Supply		Universal AC/DC adapter (Sinpro Model no. MPU100-108)
	Input voltage	100 ~ 240 V_{AC}, 47 ~ 63 Hz, 1.25 ~ 0.5 A
	Output voltage	+24 V_{DC}, 4.16 A max. (100 watts)
Optional Touch Screen	Type	Analog Resistive
	Resolution	Continuous
	Light transmission	75%
	Controller	RS-232 interface (use COM4)
	Durability	30 million touches
Environment	Temperature	0 ~ 35° C (Operating)
	Humidity	10 ~ 95% @ 40° C (non-condensing)
	Shock Resistance	20G peak acceleration (11ms duration)
	Water/dust Resistance	IP54 for whole system, IP65 for front bezel
Physical Characteristics	Dimensions (W x H x D)	471.5 x 416.2 x 110.8 mm (18.56" x 16.38" x 4.36")
	Weight	10 kg (22.0 lb)

Dimensions

Unit: mm

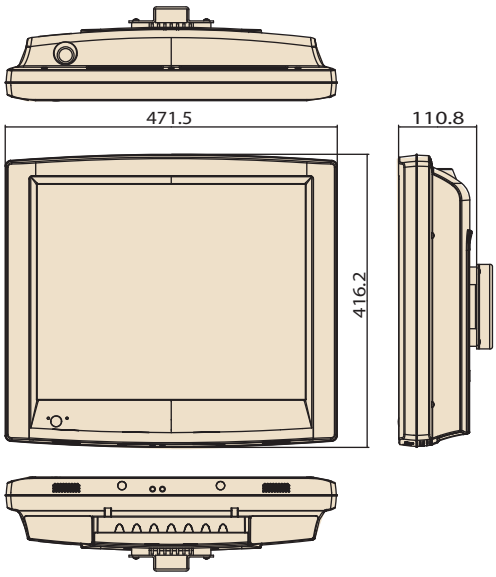

Mounting

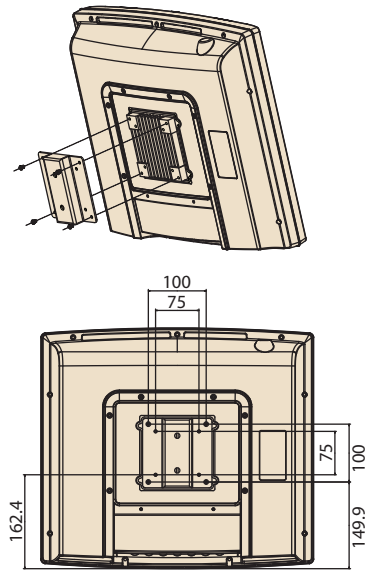

VESA: 75 x 75mm ; 100 x 100mm

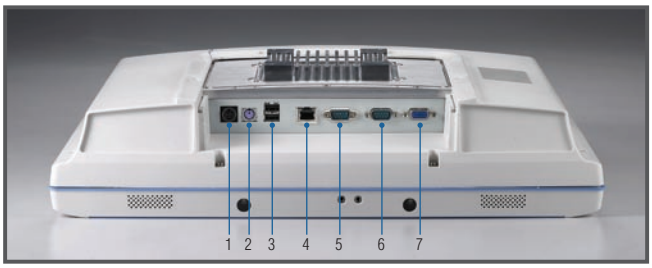

1. 4-pin mini-DIN DC connector
2. PS/2 Mouse/Keyboard Port
3. USB 2.0 Ports x 2
4. 10/100Base-T Ethernet interface (RJ-45)
5. Isolated RS-232/422/485 COM port (COM1)
6. RS-232 COM port (COM2)
7. D-sub VGA port

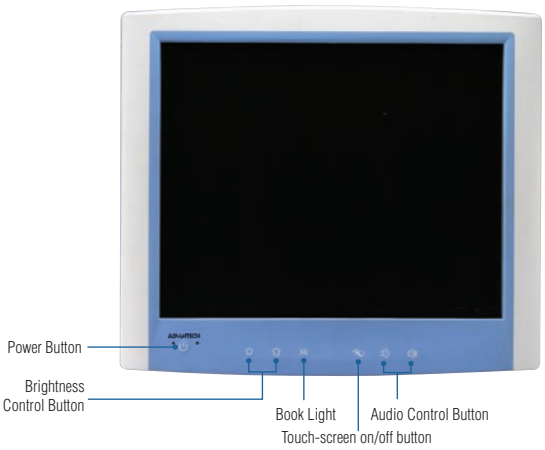

Ordering Information

Part Number	Touch Panel	HDD	RAM
POC-S195-140-BE	-	-	-
POC-S195-140-BTE	Res.TS	-	-
POC-S195-PTE	Res.TS	80 G	1G RAM

Packing List

Part Number	Description	Quantity
1700060202	CABLE 6P-6P-6P 20cm PS/2 KB & MOUSE 20cm	1
1757000274	AC 100W SPS MPU100-108 W/PFC 100-240	1
2006S19500	User manual for POC-S195 model 1st Ed	1
2190000902	CARDBOARD-WARRANTY REV. A2	1
	Startup manual	1
	CD-ROM for POC-S series Driver & Utility	1
	China RoHs report	1

Accessory

Part Number	Description
	802.11b/g wireless LAN mini-PCI module & external antenna