Polyester Modular Enclosures - NEMA 4X

PJU Series - Lift-Off, Solid and Window Door

<< Product Information << Corrosian Resistant Enclosures <<



Download - PDF

Drawing Links

Panel Sold Separately

Application

- Designed for use as instrument enclosures, electric, hydraulic or pneumatic control housings, electrical junction boxes or terminal wiring enclosures.
- Provides outstanding insulation and protection where equipment may be hosed down or be very wet.
- Ideal in applications with high temperatures or highly corrosive environments.

Standards

- UL 508 Type 1, 2, 3, 4, 4X, 12 and 13
- CSA Type 1, 2, 3, 4, 4X, 12 and 13
- Complies with
  - NEMA Type 1, 2, 3, 4, 4X, 12 and 13
  - IEC 60529, IP66

Construction

- Molded fiberglass polyester enclosure with matching cover is easily punched, cut, or drilled.
- Enhanced UV inhibitors protect against outdoor weathering.
- Standard JIC sizes under 18" x 16".
- Threaded brass inserts are provided for optional inner panel or terminal kit mounting. Mounting hardware is included.
- Cover fastened with captive stainless steel screws in threaded brass inserts.
- Enclosure available with clear Polycarbonate cover to 16" x 14".
- Captive oil resistant gasket provides a positive seal.
- Available with Polycarbonate flange or foot mount brackets for multi-directional mounting.
- Operating temperatures between 130°C and -40°C (266°F to -40°F).
- Impact index of 6.78J (5 ft/lb).
- For corrosion resistance information, please refer to table in the Technical Information section.

Finish

- Fiberglass polyester material has a gray finish.
- Optional inner panels are available in white powder coated finished steel or unfinished aluminum, or Fiberglass.

Accessories

- **Painted steel inner panels**
- **PJ/PJU swing panel**
- **Unfinished aluminum inner panels**
- **Fiberglass inner panels**
- **Terminal kit assemblies**

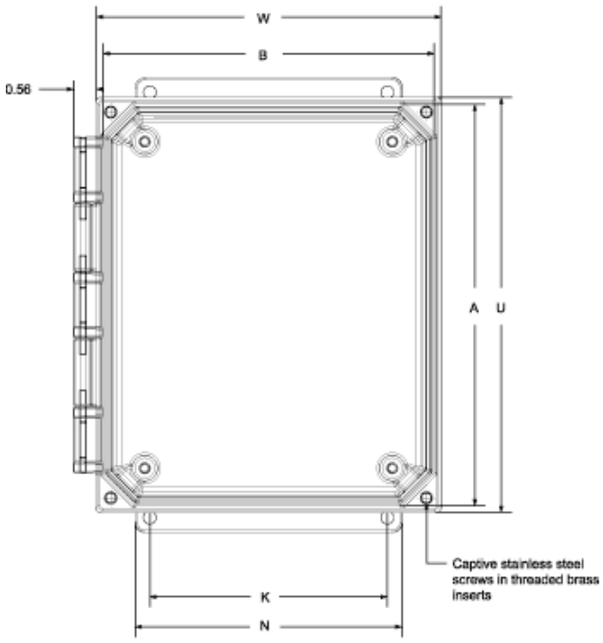

Front View

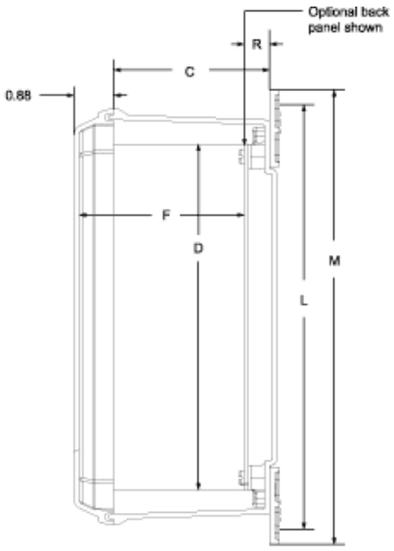

Side View

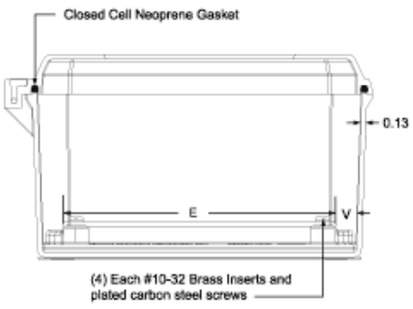

End View

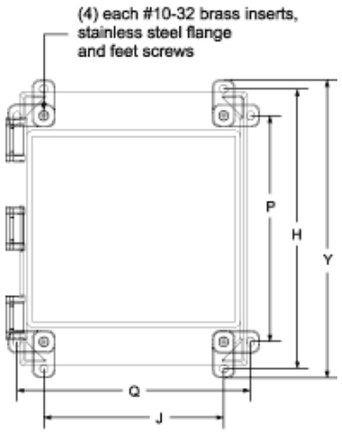

Rear View

Lift-Off Cover Flange Part No.	Lift-Off Cover Feet Part No.	Overall Dimensions			Panel Size			Center		Flange Mounting Centers		
		A	B	C	D	E	F	S	Z	L	K	M
PJU664F	PJU664	6.05	6.27	4.13	4.88	4.88	4.11	4.25	4.25	6.88 / 6.75	4.05	7.62
PJU864F	PJU864	8.05	6.27	4.13	6.75	4.88	4.11	6.25	4.25	8.88 / 8.75	4.00	9.62
PJU1084F	PJU1084	10.05	8.27	4.13	8.75	6.88	4.11	10.25	6.25	10.75	6.00	11.50
PJU12106F	PJU12106	12.05	10.27	6.13	10.75	8.88	6.11	10.25	8.25	12.75	8.00	13.50
PJU14126F	PJU14126	14.05	12.27	6.13	12.75	10.88	6.11	12.25	10.25	14.75 / 14.62	10.00	15.37
PJU16148F	PJU16148	16.05	14.27	8.13	14.75	12.88	8.11	14.25	12.25	16.75	12.00	17.50
PJU181610F	PJU181610	18.30	16.52	10.13	16.88	14.88	10.11	16.25	14.25	18.88 / 18.76	12.00	20.12
PJU201610F	PJU201610	20.50	16.27	10.13	18.44	14.44	10.11	17.81	13.81	21.25	10.00	21.50

Lift-Off Clear Cover Flange Part No.	Lift-Off Clear Cover Feet Part No.	N	H	J	P	Q	U	W	Y	R	V	Optional Panel Part No.	Ship Wt. (lbs)
PJU664CCF	PJU664CC	4.80	6.75	4.91	4.69	6.97	6.50	6.72	7.47	0.70	0.52	14R0505	4
PJU864CCF	PJU864CC	4.75	8.75	4.91	6.69	6.97	8.50	6.72	9.46	0.70	0.62	14R0705	4
PJU1084CCF	PJU1084CC	6.75	10.75	6.91	8.69	8.97	10.50	8.72	11.47	0.70	0.53	14R0907	6
PJU12106CCF	PJU12106CC	8.75	12.70	8.82	10.64	10.88	12.50	10.72	13.47	0.68	0.44	14R1109	6
PJU14126CCF	PJU14126CC	10.75	14.70	10.82	12.64	12.88	14.50	12.72	15.37	0.70	0.46	14R1311	8
PJU16148CCF	PJU16148CC	12.75	16.91	11.47	13.50	14.88	16.50	14.72	17.50	0.70	0.40	14R1513	11
N/A	N/A	12.75	19.16	13.72	15.75	17.13	18.75	16.97	19.89	0.70	0.45	P1868	12
N/A	N/A	12.75	20.53	13.16	17.13	16.56	20.50	16.72	21.28	0.70	0.50	P2068	17

© Copyright 2011. Hammond Manufacturing Ltd. All rights reserved.