HAMMOND MANUFACTURING

Quality Products. Service Excellence.

Type 4X Polyester Junction Box (Solid and Clear Cover) *PJU Series*

Continuous Hinge Door with Screws





Panel Sold Separately

Application

- Designed for use as instrument enclosures, electric, hydraulic or pneumatic control housings, electrical junction boxes or terminal wiring enclosures.
- Provides outstanding insulation and protection where equipment may be hosed down or be very wet.
- Ideal in applications with high temperatures or highly corrosive environments.

Standards

- UL 508 Type 1, 2, 3, 4, 4X, 12 and 13
- CSA Type 1, 2, 3, 4, 4X, 12 and 13
- Complies with
  - NEMA Type 1, 2, 3, 4, 4X, 12 and 13
  - IEC 60529, IP66

Construction

- Molded fiberglass polyester enclosure with matching cover is easily punched, cut, or drilled.
- Enhanced UV inhibitors protect against outdoor weathering.
- Standard JIC sizes under 18" x 16".
- Threaded brass inserts are provided for optional inner panel or terminal kit mounting. Mounting hardware is included.
- Cover fastened with captive stainless steel screws in threaded brass inserts.
- Enclosure available with clear Polycarbonate cover to 16" x 20".
- Molded hinge with stainless steel pin.
- Captive oil resistant gasket provides a positive seal.
- Available with Polycarbonate flange or foot mount brackets for multi-directional mounting.
- Operating temperatures between 130°C and -40°C (266°F to -40°F).
- Impact index of 6.78J (5 ft/lb).
- For corrosion resistance information, please refer to table in the Technical Information section.

Finish

- Fiberglass polyester material has a gray finish.
- Optional inner panels are available in white powder coated finished steel or unfinished aluminum, or Fiberglass.

Accessories

- PJ/PJU Replacement Hardware Kits
- Swing Panels
- Inner Panels
- Terminal Kit Assemblies

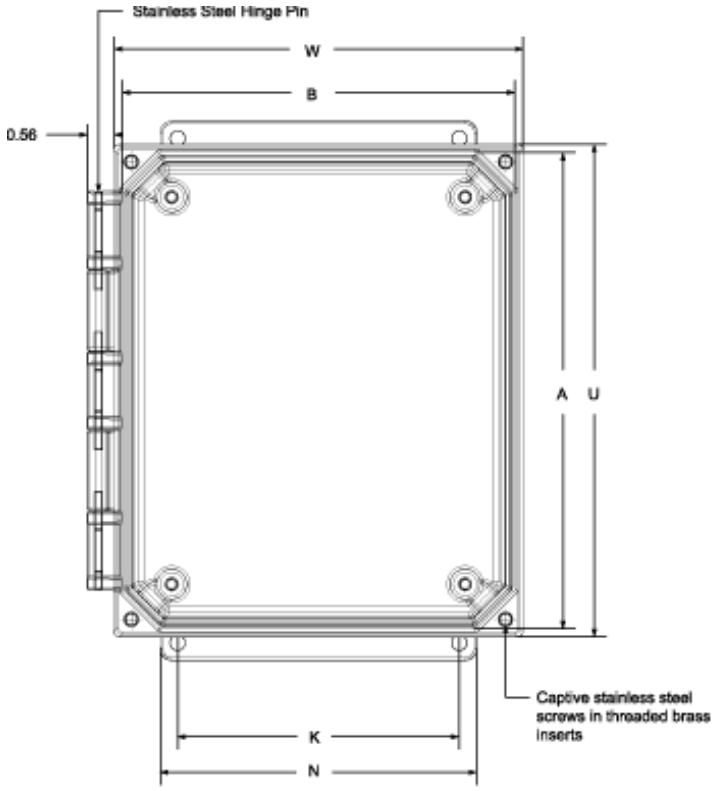

Front View

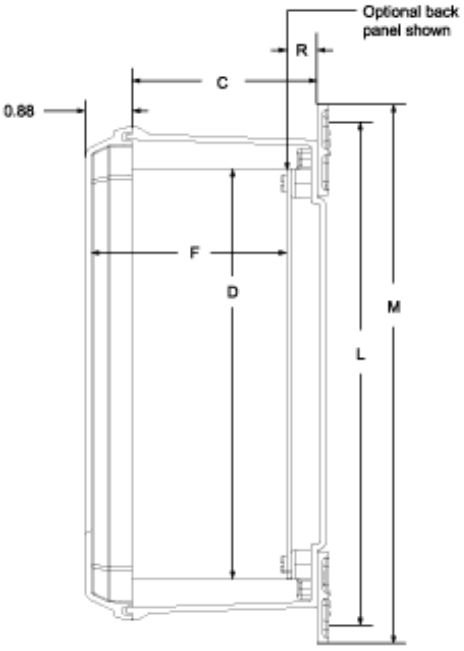

Side View

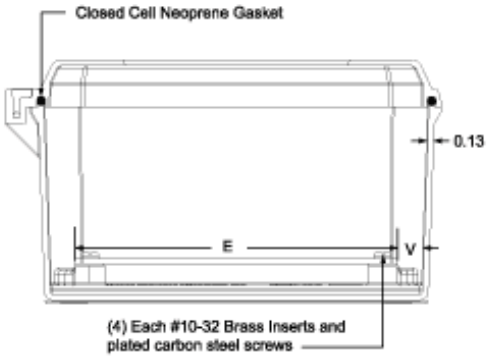

End View

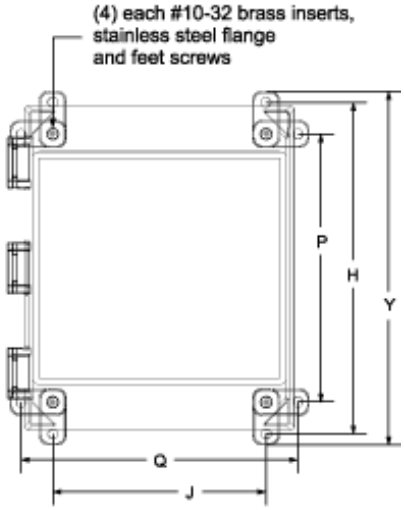

Rear View

Hinged Screw Cover Flange Part No.	Hinged Screw Cover Feet Part No.	Overall Dimensions A	B	C	Panel Size D	E	F	Center S	Z	Flange Mounting Centers L	K	M
PJU664HF	**PJU664H**	6.05	6.27	4.13	4.88	4.88	4.11	4.25	4.25	6.88 / 6.75	4.05	7.62
PJU864HF	**PJU864H**	8.05	6.27	4.13	6.75	4.88	4.11	6.25	4.25	8.88 / 8.75	4.00	9.62
PJU1084HF	**PJU1084H**	10.05	8.27	4.13	8.75	6.88	4.11	10.25	6.25	10.75	6.00	11.50
PJU12106HF	**PJU12106H**	12.05	10.27	6.13	10.75	8.88	6.11	10.25	8.25	12.75	8.00	13.50
PJU14126HF	**PJU14126H**	14.05	12.27	6.13	12.75	10.88	6.11	12.25	10.25	14.75 / 14.62	10.00	15.37
PJU16148HF	**PJU16148H**	16.05	14.27	8.13	14.75	12.88	8.11	14.25	12.25	16.75	12.00	17.50
PJU181610HF	**PJU181610H**	18.30	16.52	10.13	16.88	14.88	10.11	16.25	14.25	18.88 / 18.76	12.00	20.12
PJU201610HF	**PJU201610H**	20.50	16.27	10.13	18.44	14.44	10.11	17.81	13.81	21.25	10.00	21.50

Hinged Screw Clear Cover Flange Part No.	Hinged Screw Clear Cover Feet Part No.	N	H	J	P	Q	U	W	Y	R	V	Opt. Panel Part No.	Ship Wt. (lbs)
PJU664CCHF	**PJU664CCH**	4.80	6.75	4.91	4.69	6.97	6.50	6.72	7.47	0.70	0.52	**14R0505**	4

Hinged Screw Clear Cover Flange Part No.	Hinged Screw Clear Cover Feet Part No.	N	H	J	P	Q	U	W	Y	R	V	Opt. Panel Part No.	Ship Wt. (lbs)
PJU864CCHF	**PJU864CCH**	4.75	8.75	4.91	6.69	6.97	8.50	6.72	9.46	0.70	0.62	**14R0705**	4
PJU1084CCHF	**PJU1084CCH**	6.75	10.75	6.91	8.69	8.97	10.50	8.72	11.47	0.70	0.53	**14R0907**	6
PJU12106CCHF	**PJU12106CCH**	8.75	12.70	8.82	10.64	10.88	12.50	10.72	13.47	0.68	0.44	**14R1109**	6
PJU14126CCHF	**PJU14126CCH**	10.75	14.70	10.82	12.64	12.88	14.50	12.72	15.37	0.70	0.46	**14R1311**	8
PJU16148CCHF	**PJU16148CCH**	12.75	16.91	11.47	13.50	14.88	16.50	14.72	17.50	0.70	0.40	**14R1513**	11
-	**-**	12.75	19.16	13.72	15.75	17.13	18.75	16.97	19.89	0.70	0.45	**P1868**	12
-	**-**	12.75	20.53	13.16	17.13	16.56	20.50	16.72	21.28	0.70	0.50	**P2068**	17

Data subject to change without notice

© 2015. Hammond Manufacturing Ltd. All rights reserved.