HAMMOND MANUFACTURING

Quality Products. Service Excellence.

Type 4X Polyester Junction Box *PJ Series*

Lift-Off Cover/Hinged Door with Screws



Panel Sold Separately

Application

- Designed for use as instrument enclosures, electric, hydraulic or pneumatic control housings, electrical junction boxes or terminal wiring enclosures.
- Provides outstanding insulation and protection where equipment may be hosed down or be very wet.
- Ideal in applications with high temperatures or highly corrosive environments.

Standards

- UL 508 Type 1, 2, 3, 4, 4X, 12 and 13
- UL 508 Type 6P (see table)
- CSA Type 1, 2, 3, 4, 4X, 12 and 13
- CSA Type 6P (see table)
- Complies with
  - NEMA Type 1, 2, 3, 4, 4X,12 and 13
  - IEC 60529, IP66

Construction

- Molded fiberglass polyester enclosure with matching cover is easily punched, cut, or drilled.
- Enhanced UV inhibitors protect against outdoor weathering.
- Standard JIC sizes under 18" x 16".
- 10-32 threaded brass inserts are provided for optional inner panel or terminal kit mounting. Mounting hardware included.
- Cover is fastened with captive stainless steel screws in threaded brass inserts.
- Captive oil resistant gasket provides a positive seal.
- Threaded brass inserts are provided for mounting feet to the rear of the enclosure.
- Stainless steel mounting brackets and hardware are provided for mounting feet to the rear of the enclosure.
- Operating temperatures between 130°C and -40°C (266°F to -40°F).
- Impact index of 6.78J (5 ft/lb).
- For corrosion resistance information, please refer to table in the Technical Information section.

Finish

- Fiberglass polyester material has a gray finish.
- Optional inner panels are available in white powder coated finished steel, unfinished aluminum, or Fiberglass.

Accessories

- PJ/PJU Replacement Hardware Kits
- Terminal Kit Assemblies
- Inner Panels

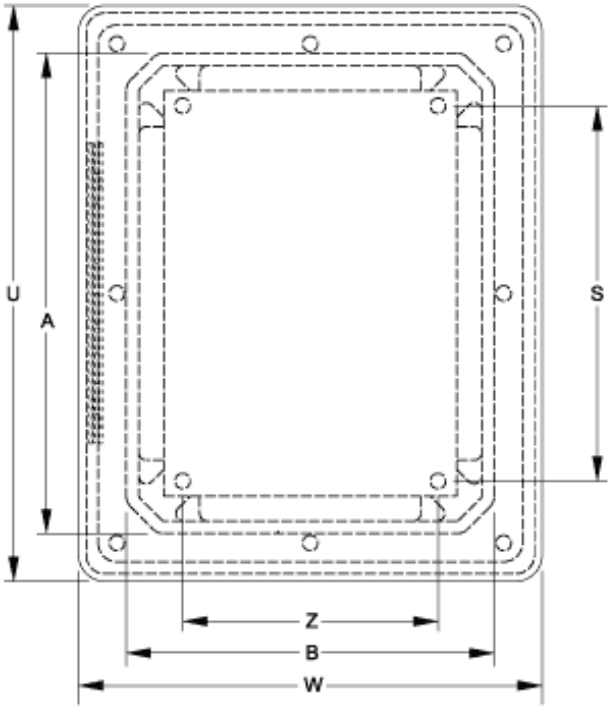

Front View
Hinged Screw Cover

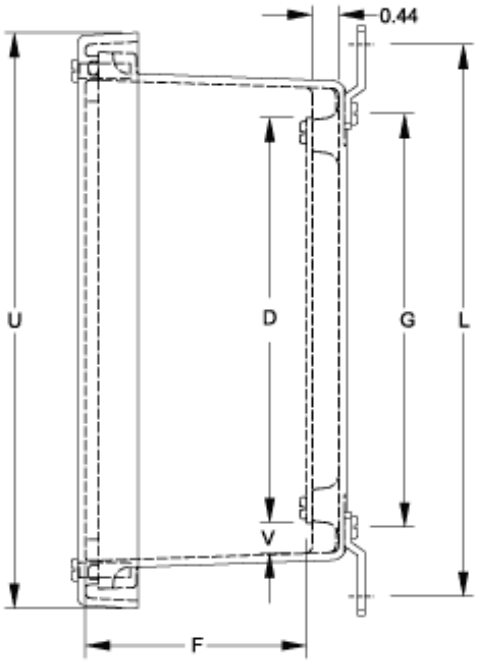

Side View

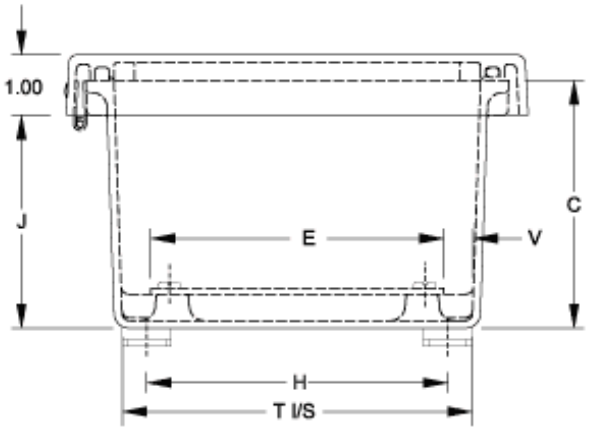

End View

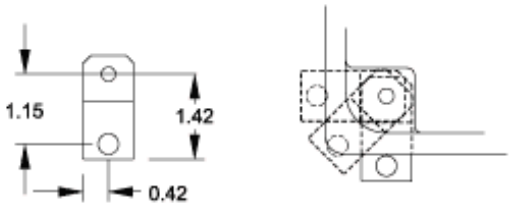

Optional Mounting Feet Locations

Thermal Index
130°C to -40°C (266°F to -40°F)

Impact Index
6.78J (5 ft/lb)

Lift-Off Cover	Hinged Cover	Enclosure Dimensions			Panel Dimensions		Centers									Cover Dimensions		Opt. Steel Panel	Ship Wt.
Part No.	Part No.	A	B	C	D	E	F	G	H	J	S	Z	L	T	V	U	W	Part No.[1]	(lbs)
PJ664[2]	**PJ664H**	6.10	6.10	4.13	4.88	4.88	3.76	5.01	5.01	3.52	4.25	4.25	7.32	5.83	0.49	7.69	7.69	**14R0505**	4
PJ864[2]	**PJ864H**	8.00	6.12	4.13	6.75	4.88	3.68	6.89	5.01	3.47	6.25	4.25	9.19	5.85	0.50	9.59	7.71	**14R0705**	4
PJ1084[2]	**PJ1084H**	10.13	8.26	4.13	8.75	6.88	3.68	8.89	7.01	3.47	8.25	6.25	11.19	7.85	0.50	11.77	9.90	**14R0907**	6
PJ1086[2]	**PJ1086H**	10.13	8.26	6.13	8.75	6.88	5.68	8.89	7.01	5.47	8.25	6.25	11.19	7.85	0.50	11.77	9.90	**14R0907**	6
PJ12106[2]	**PJ12106H**	12.13	10.26	6.13	10.75	8.88	5.68	10.89	9.01	5.47	10.25	8.25	13.19	9.85	0.50	13.77	11.90	**14R1109**	8
PJ14126[2]	**PJ14126H**	14.13	12.26	6.13	12.75	10.88	5.68	12.89	11.01	5.47	12.25	10.25	15.19	11.85	0.50	15.73	13.85	**14R1311**	11
PJ16148	**PJ16148H**	16.27	14.40	8.13	14.75	12.88	7.68	14.89	13.01	7.47	14.25	12.25	17.19	13.71	0.50	17.87	15.99	**14R1513**	12
PJ18168	**PJ18168H**	18.40	16.40	8.13	16.88	14.88	7.68	16.97	14.97	7.47	16.25	14.25	19.28	15.72	0.50	20.00	18.00	**P1868**	17

Lift-Off Cover	Hinged Cover	Enclosure Dimensions			Panel Dimensions		Centers									Cover Dimensions		Opt. Steel Panel	Ship Wt.
Part No.	Part No.	A	B	C	D	E	F	G	H	J	S	Z	L	T	V	U	W	Part No.[1]	(lbs)
PJ20168	**PJ20168H**	20.00	16.00	8.13	18.44	14.44	7.68	18.54	14.54	7.47	17.81	13.81	20.84	15.31	0.52	21.59	17.59	**P2068**	19

[1] **Aluminum and fiberglass panels available**

[2] Type 6P

Data subject to change without notice

© 2015. Hammond Manufacturing Ltd. All rights reserved.