HAMMOND MANUFACTURING

*Quality Products. Service Excellence.*

# Type 4X Polyester Junction Box w/ Raised Lid (Solid and Window) *PJ Series*

**Continuous Hinge Door with Snap Latches**



Panel Sold Separately

## Application

- Designed for use as instrument enclosures, electric, hydraulic or pneumatic control housings, electrical junction boxes or terminal wiring enclosures.
- Provides outstanding insulation and protection where equipment may be hosed down or be very wet.
- Ideal in applications with high temperatures or highly corrosive environments.

## Standards

- UL 508 Type 1, 2, 3, 4, 4X, 12 and 13
- CSA Type 1, 2, 3, 4, 4X, 12 and 13
- Complies with
  - NEMA Type 1, 2, 3, 4, 4X, 12, & 13
  - IEC 60529, IP66

## Construction

- Molded fiberglass polyester enclosure with matching cover is easily punched, cut, or drilled.
- Enhanced UV inhibitors protect against outdoor weathering.
- Standard JIC sizes under 18"x16".
- Threaded brass inserts are provided for optional inner panel or terminal kit mounting. Mounting hardware is included.
- Stainless steel draw type "snap latch" door fasteners.
- Door fasteners include a provision for padlocking.
- Enclosures are available with bonded polycarbonate viewing windows.
- Door is supported with a continuous stainless steel hinge.
- Captive oil resistant gasket provides a positive seal.
- Threaded brass inserts are provided for mounting feet to the rear of the enclosure.
- Stainless steel mounting brackets and hardware are provided for mounting to the rear of the enclosure.
- Operating temperatures between 130°C and -40°C (266°F to -40°F).
- Impact index of 6.78J (5 ft/lb).
- For corrosion resistance information, please refer to table in the Technical Information section.

## Finish

- Fiberglass polyester material has a gray finish.
- Optional inner panels are available in white powder coated finished steel or unfinished aluminum, or fiberglass.

## Accessories

- PJ/PJU Replacement Hardware Kits
- Swing Panels
- Inner Panels
- Terminal Kit Assemblies

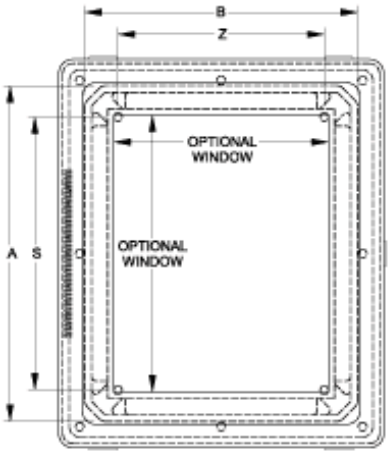

Front View

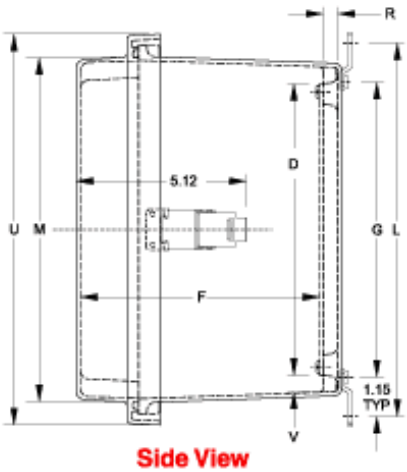

Side View

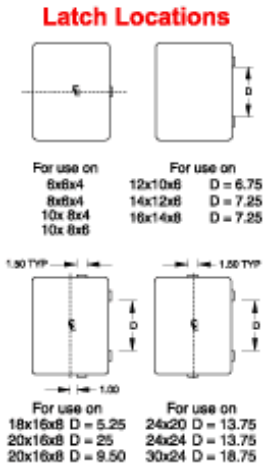


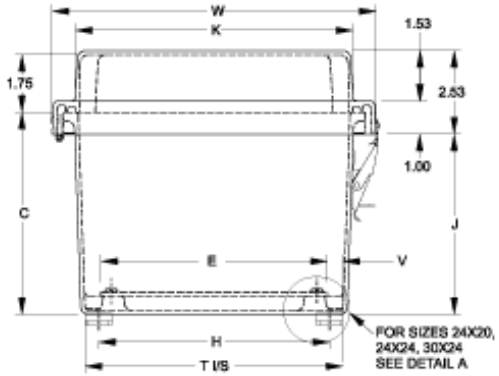

End View

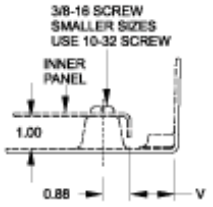

Detail A

**Thermal Index**
130°C to -40°C (266°F to -40°F)

**Impact Index**
6.78J (5 ft/lb)

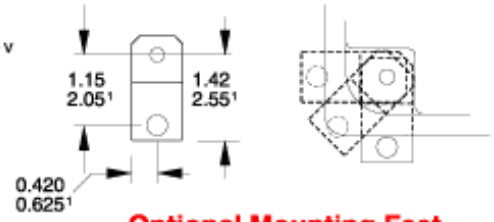

Optional Mounting Feet Locations

| Solid Cover Part No. | Window Cover Part No. | Overall Dimensions A | B | C | Panel Size D | E | G | H | J | Center S | Z |
|---|---|---|---|---|---|---|---|---|---|---|---|
| **PJ664RL** | **PJ664RLW** | 6.10 | 6.10 | 4.18 | 4.88 | 4.88 | 5.01 | 5.01 | 3.52 | 4.25 | 4.25 |
| **PJ864RL** | **PJ864RLW** | 8.00 | 6.12 | 4.13 | 6.75 | 4.88 | 6.89 | 5.01 | 3.47 | 6.25 | 4.25 |
| **PJ1084RL** | **PJ1084RLW** | 10.13 | 8.26 | 4.13 | 8.75 | 6.88 | 8.89 | 7.01 | 3.47 | 8.25 | 6.25 |
| **PJ1086RL** | **PJ1086RLW** | 10.13 | 8.26 | 6.13 | 8.75 | 6.88 | 8.89 | 7.01 | 5.47 | 8.25 | 6.25 |
| **PJ12106RL** | **PJ12106RLW** | 12.13 | 10.26 | 6.13 | 10.75 | 8.88 | 10.89 | 9.01 | 5.47 | 10.25 | 8.25 |
| **PJ14126RL** | **PJ14126RLW** | 14.13 | 12.26 | 6.13 | 12.75 | 10.88 | 12.89 | 11.01 | 5.47 | 12.25 | 10.25 |
| **PJ16148RL** | **PJ16148RLW** | 16.27 | 14.40 | 8.13 | 14.75 | 12.88 | 14.89 | 13.01 | 7.47 | 14.25 | 12.25 |
| **PJ18168RL** | **PJ18168RLW** | 18.40 | 16.40 | 8.13 | 16.88 | 14.88 | 16.97 | 14.97 | 7.47 | 16.25 | 14.25 |
| **PJ20168RL** | **PJ20168RLW** | 20.00 | 16.00 | 8.13 | 18.44 | 14.44 | 18.54 | 14.54 | 7.47 | 17.81 | 13.81 |
| **PJ24208RL** | **PJ24208RLW** | 24.00 | 20.00 | 8.13 | 21.00 | 17.00 | 22.75 | 18.75 | 7.47 | 19.25 | 15.25 |
| **PJ24248RL¹** | **PJ24248RLW¹** | 24.00 | 24.00 | 8.13 | 21.00 | 21.00 | 22.75 | 22.75 | 7.47 | 19.25 | 19.25 |
| **PJ30248RL¹** | **PJ30248RLW¹** | 30.00 | 24.00 | 8.13 | 27.00 | 21.00 | 28.75 | 22.75 | 7.47 | 25.25 | 19.25 |
| **PJ242010RL¹** | **PJ242010RLW¹** | 24.00 | 20.00 | 10.13 | 21.00 | 17.00 | 22.75 | 18.75 | 9.47 | 19.25 | 15.25 |
| **PJ242410RL¹** | **PJ242410RLW¹** | 24.00 | 24.00 | 10.13 | 21.00 | 21.00 | 22.75 | 22.75 | 9.47 | 19.25 | 19.25 |
| **PJ302410RL¹** | **PJ302410RLW¹** | 30.00 | 24.00 | 10.13 | 27.00 | 21.00 | 28.75 | 22.75 | 9.47 | 25.25 | 19.25 |

¹ Uses larger mounting foot - See drawing above.

| Solid Cover Part No. | Window Cover Part No. | Cover Dimensions L | T | K | M | U | W | R | V | Opt. Panel Part No. | Window Dimensions Height | Width |
|---|---|---|---|---|---|---|---|---|---|---|---|---|
| **PJ664RL** | **PJ664RLW** | 7.32 | 5.83 | 6.08 | 6.08 | 7.70 | 7.69 | 0.44 | 0.49 | **14R0505** | 4.25 | 4.25 |

| Solid Cover | Window Cover | Cover Dimensions | | | | | | | | Opt. Panel | Window Dimensions | |
|---|---|---|---|---|---|---|---|---|---|---|---|---|
| Part No. | Part No. | L | T | K | M | U | W | R | V | Part No. | Height | Width |
| **PJ864RL** | **PJ864RLW** | 9.19 | 5.85 | 6.11 | 7.98 | 9.60 | 7.71 | 0.44 | 0.50 | **14R0705** | 6.25 | 4.25 |
| **PJ1084RL** | **PJ1084RLW** | 11.19 | 7.85 | 8.44 | 10.32 | 11.80 | 9.90 | 0.44 | 0.50 | **14R0907** | 8.37 | 6.50 |
| **PJ1086RL** | **PJ1086RLW** | 11.19 | 7.85 | 8.44 | 10.32 | 11.80 | 9.00 | 0.44 | 0.50 | **14R0907** | 8.37 | 6.50 |
| **PJ12106RL** | **PJ12106RLW** | 13.19 | 9.85 | 10.45 | 12.32 | 13.80 | 11.90 | 0.44 | 0.50 | **14R1109** | 10.37 | 8.50 |
| **PJ14126RL** | **PJ14126RLW** | 15.19 | 11.85 | 12.45 | 14.32 | 15.70 | 13.85 | 0.44 | 0.50 | **14R1311** | 12.37 | 10.50 |
| **PJ16148RL** | **PJ16148RLW** | 17.19 | 13.71 | 13.86 | 15.73 | 17.90 | 15.99 | 0.44 | 0.50 | **14R1513** | 13.00 | 11.00 |
| **PJ18168RL** | **PJ18168RLW** | 19.28 | 15.72 | 15.86 | 17.86 | 20.00 | 18.00 | 0.44 | 0.50 | **P1868** | 14.00 | 12.00 |
| **PJ20168RL** | **PJ20168RLW** | 20.84 | 15.31 | 15.43 | 19.43 | 21.60 | 17.59 | 0.44 | 0.52 | **P2068** | 15.00 | 11.00 |
| **PJ24208RL** | **PJ24208RLW** | 25.06 | 19.73 | 20.16 | 24.16 | 25.60 | 21.59 | 1.00 | 1.38 | **18P2117** | 16.00 | 12.00 |
| **PJ24248RL[1]** | **PJ24248RLW[1]** | 25.06 | 23.73 | 24.16 | 24.16 | 25.60 | 25.59 | 1.00 | 1.38 | **18P2121** | 16.00 | 16.00 |
| **PJ30248RL[1]** | **PJ30248RLW[1]** | 31.06 | 23.73 | 24.16 | 30.16 | 31.60 | 25.59 | 1.00 | 1.38 | **18P2721** | 23.00 | 17.00 |
| **PJ242010RL[1]** | **PJ242010RLW[1]** | 25.06 | 19.70 | 20.16 | 24.16 | 25.60 | 21.59 | 1.00 | 1.36 | **18P2117** | 16.00 | 12.00 |
| **PJ242410RL[1]** | **PJ242410RLW[1]** | 25.06 | 23.70 | 24.16 | 24.16 | 25.60 | 25.59 | 1.00 | 1.36 | **18P2121** | 16.00 | 16.00 |
| **PJ302410RL[1]** | **PJ302410RLW[1]** | 31.06 | 23.70 | 24.16 | 30.16 | 31.60 | 25.59 | 1.00 | 1.36 | **18P2721** | 23.00 | 17.00 |

[1] Uses larger mounting foot - See drawing above.

*Data subject to change without notice*

© 2015. Hammond Manufacturing Ltd. All rights reserved.