HAMMOND MANUFACTURING

Quality Products. Service Excellence.

Type 4X Polyester Junction Box w/ Raised Lid (Solid and Window) *PJ Series*

Continuous Hinge Door with Snap Latches



Panel Sold Separately

Application

- Designed for use as instrument enclosures, electric, hydraulic or pneumatic control housings, electrical junction boxes or terminal wiring enclosures.
- Provides outstanding insulation and protection where equipment may be hosed down or be very wet.
- Ideal in applications with high temperatures or highly corrosive environments.

Standards

- UL 508 Type 1, 2, 3, 4, 4X, 12 and 13
- CSA Type 1, 2, 3, 4, 4X, 12 and 13
- Complies with
  - NEMA Type 1, 2, 3, 4, 4X, 12, & 13
  - IEC 60529, IP66

Construction

- Molded fiberglass polyester enclosure with matching cover is easily punched, cut, or drilled.
- Enhanced UV inhibitors protect against outdoor weathering.
- Standard JIC sizes under 18"x16".
- Threaded brass inserts are provided for optional inner panel or terminal kit mounting. Mounting hardware is included.
- Stainless steel draw type "snap latch" door fasteners.
- Door fasteners include a provision for padlocking.
- Enclosures are available with bonded polycarbonate viewing windows.
- Door is supported with a continuous stainless steel hinge.
- Captive oil resistant gasket provides a positive seal.
- Threaded brass inserts are provided for mounting feet to the rear of the enclosure.
- Stainless steel mounting brackets and hardware are provided for mounting to the rear of the enclosure.
- Operating temperatures between 130°C and -40°C (266°F to -40°F).
- Impact index of 6.78J (5 ft/lb).
- For corrosion resistance information, please refer to table in the Technical Information section.

Finish

- Fiberglass polyester material has a gray finish.
- Optional inner panels are available in white powder coated finished steel or unfinished aluminum, or fiberglass.

Accessories

- PJ/PJU Replacement Hardware Kits
- Swing Panels
- Inner Panels
- Terminal Kit Assemblies

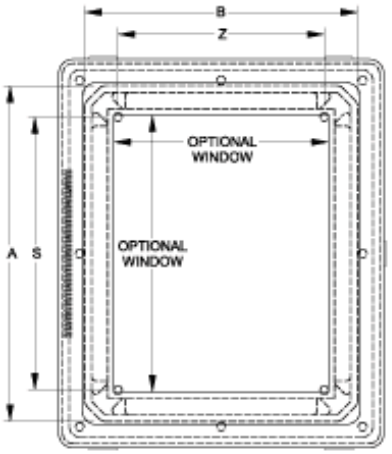

Front View

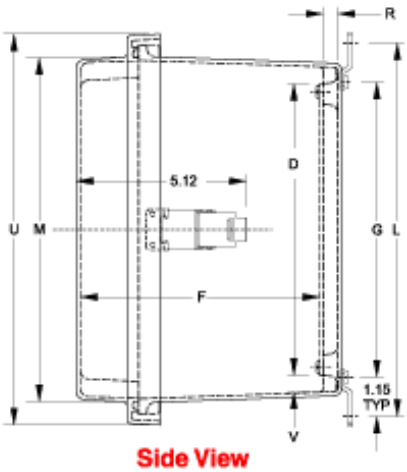

Side View

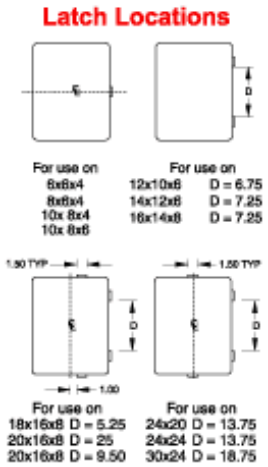

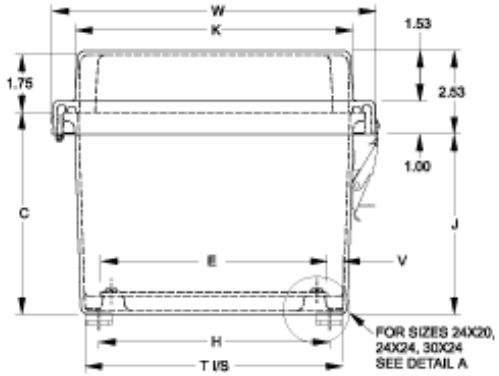

End View

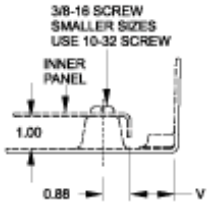

Detail A

Thermal Index
130°C to -40°C (266°F to -40°F)

Impact Index
6.78J (5 ft/lb)

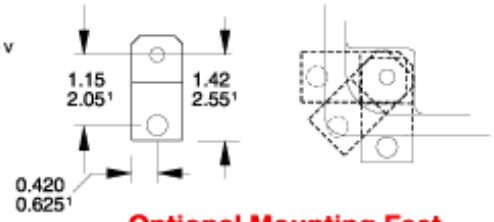

Optional Mounting Feet Locations

Solid Cover Part No.	Window Cover Part No.	Overall Dimensions A	B	C	Panel Size D	E	G	H	J	Center S	Z
PJ664RL	**PJ664RLW**	6.10	6.10	4.18	4.88	4.88	5.01	5.01	3.52	4.25	4.25
PJ864RL	**PJ864RLW**	8.00	6.12	4.13	6.75	4.88	6.89	5.01	3.47	6.25	4.25
PJ1084RL	**PJ1084RLW**	10.13	8.26	4.13	8.75	6.88	8.89	7.01	3.47	8.25	6.25
PJ1086RL	**PJ1086RLW**	10.13	8.26	6.13	8.75	6.88	8.89	7.01	5.47	8.25	6.25
PJ12106RL	**PJ12106RLW**	12.13	10.26	6.13	10.75	8.88	10.89	9.01	5.47	10.25	8.25
PJ14126RL	**PJ14126RLW**	14.13	12.26	6.13	12.75	10.88	12.89	11.01	5.47	12.25	10.25
PJ16148RL	**PJ16148RLW**	16.27	14.40	8.13	14.75	12.88	14.89	13.01	7.47	14.25	12.25
PJ18168RL	**PJ18168RLW**	18.40	16.40	8.13	16.88	14.88	16.97	14.97	7.47	16.25	14.25
PJ20168RL	**PJ20168RLW**	20.00	16.00	8.13	18.44	14.44	18.54	14.54	7.47	17.81	13.81
PJ24208RL	**PJ24208RLW**	24.00	20.00	8.13	21.00	17.00	22.75	18.75	7.47	19.25	15.25
PJ24248RL¹	**PJ24248RLW¹**	24.00	24.00	8.13	21.00	21.00	22.75	22.75	7.47	19.25	19.25
PJ30248RL¹	**PJ30248RLW¹**	30.00	24.00	8.13	27.00	21.00	28.75	22.75	7.47	25.25	19.25
PJ242010RL¹	**PJ242010RLW¹**	24.00	20.00	10.13	21.00	17.00	22.75	18.75	9.47	19.25	15.25
PJ242410RL¹	**PJ242410RLW¹**	24.00	24.00	10.13	21.00	21.00	22.75	22.75	9.47	19.25	19.25
PJ302410RL¹	**PJ302410RLW¹**	30.00	24.00	10.13	27.00	21.00	28.75	22.75	9.47	25.25	19.25

¹ Uses larger mounting foot - See drawing above.

Solid Cover Part No.	Window Cover Part No.	Cover Dimensions L	T	K	M	U	W	R	V	Opt. Panel Part No.	Window Dimensions Height	Width
PJ664RL	**PJ664RLW**	7.32	5.83	6.08	6.08	7.70	7.69	0.44	0.49	**14R0505**	4.25	4.25

Solid Cover	Window Cover	Cover Dimensions								Opt. Panel	Window Dimensions	
Part No.	Part No.	L	T	K	M	U	W	R	V	Part No.	Height	Width
PJ864RL	**PJ864RLW**	9.19	5.85	6.11	7.98	9.60	7.71	0.44	0.50	**14R0705**	6.25	4.25
PJ1084RL	**PJ1084RLW**	11.19	7.85	8.44	10.32	11.80	9.90	0.44	0.50	**14R0907**	8.37	6.50
PJ1086RL	**PJ1086RLW**	11.19	7.85	8.44	10.32	11.80	9.00	0.44	0.50	**14R0907**	8.37	6.50
PJ12106RL	**PJ12106RLW**	13.19	9.85	10.45	12.32	13.80	11.90	0.44	0.50	**14R1109**	10.37	8.50
PJ14126RL	**PJ14126RLW**	15.19	11.85	12.45	14.32	15.70	13.85	0.44	0.50	**14R1311**	12.37	10.50
PJ16148RL	**PJ16148RLW**	17.19	13.71	13.86	15.73	17.90	15.99	0.44	0.50	**14R1513**	13.00	11.00
PJ18168RL	**PJ18168RLW**	19.28	15.72	15.86	17.86	20.00	18.00	0.44	0.50	**P1868**	14.00	12.00
PJ20168RL	**PJ20168RLW**	20.84	15.31	15.43	19.43	21.60	17.59	0.44	0.52	**P2068**	15.00	11.00
PJ24208RL	**PJ24208RLW**	25.06	19.73	20.16	24.16	25.60	21.59	1.00	1.38	**18P2117**	16.00	12.00
PJ24248RL[1]	**PJ24248RLW[1]**	25.06	23.73	24.16	24.16	25.60	25.59	1.00	1.38	**18P2121**	16.00	16.00
PJ30248RL[1]	**PJ30248RLW[1]**	31.06	23.73	24.16	30.16	31.60	25.59	1.00	1.38	**18P2721**	23.00	17.00
PJ242010RL[1]	**PJ242010RLW[1]**	25.06	19.70	20.16	24.16	25.60	21.59	1.00	1.36	**18P2117**	16.00	12.00
PJ242410RL[1]	**PJ242410RLW[1]**	25.06	23.70	24.16	24.16	25.60	25.59	1.00	1.36	**18P2121**	16.00	16.00
PJ302410RL[1]	**PJ302410RLW[1]**	31.06	23.70	24.16	30.16	31.60	25.59	1.00	1.36	**18P2721**	23.00	17.00

[1] Uses larger mounting foot - See drawing above.

Data subject to change without notice

© 2015. Hammond Manufacturing Ltd. All rights reserved.